SONY

DIGITAL CAMCORDER

DSR-570WS
DSR-570WSP
DSR-500WS
DSR-500WSP

SERVICE MANUAL

Volume 2 1st Edition (Revised 1)

Power HAD

DVCAM™

⚠警告

このマニュアルは，サービス専用です。
お客様が，このマニュアルに記載された設置や保守，点検，修理などを行うと感電や火災，人身事故につながることがあります。
危険をさけるため，サービストレーニングを受けた技術者のみご使用ください。

設置や保守，点検，修理などを行う前に，別冊のサービスマニュアルVolume 1の「安全のために」と別冊のサービスマニュアルに掲載してある取扱説明書の「安全のために」を必ずお読みください。

⚠WARNING

This manual is intended for qualified service personnel only.
To reduce the risk of electric shock, fire or injury, do not perform any servicing other than that contained in the operating instructions unless you are qualified to do so. Refer all servicing to qualified service personnel.

⚠WARNUNG

Die Anleitung ist nur für qualifiziertes Fachpersonal bestimmt.
Alle Wartungsarbeiten dürfen nur von qualifiziertem Fachpersonal ausgeführt werden. Um die Gefahr eines elektrischen Schlages, Feuergefahr und Verletzungen zu vermeiden, sind bei Wartungsarbeiten strikt die Angaben in der Anleitung zu befolgen. Andere als die angegeben Wartungsarbeiten dürfen nur von Personen ausgeführt werden, die eine spezielle Befähigung dazu besitzen.

⚠AVERTISSEMENT

Ce manual est destiné uniquement aux personnes compétentes en charge de l’entretien. Afin de réduire les risques de décharge électrique, d’incendie ou de blessure n’effectuer que les réparations indiquées dans le mode d’emploi à moins d’être qualifié pour en effectuer d’autres. Pour toute réparation faire appel à une personne compétente uniquement.

目次 / Table of Contents

このマニュアルについて

本書の目的 ..... 5 (J)
関連マニュアル ..... 5 (J)
構成 ..... 7 (J)

Manual Structure

Purpose of this manual ..... 5 (E)
Related manuals ..... 5 (E)
Contents ..... 7 (E)

1. Spare Parts

1-1. 補修部品注意事項 1-1
1-1. Notes on Repair Parts 1-1
1-2. Exploded Views 1-2
1-3. Electrical Parts List 1-24
1-4. Supplied Accessories List 1-128
1-5. Optional Fixtures List 1-129

2. Semiconductor Pin Assignments

Index 2-1
Transistor 2-8
IC 2-8

3. Block Diagrams

Index 3-1
Camera Overall 3-2
VTR Overall (1/2) 3-4
VTR Overall (2/2) 3-5
VA-190 3-6
DPR-141B/141 (1/3) 3-8
CP-373/315 (1/7), ES-26 (1/3)
DPR-141B/141 (2/3) 3-10
DPR-141B/141 (3/3) 3-11
ES-26 (2/3) 3-12
ES-26 (3/3) 3-13
CN-2277/1519, CP-373/315 (2/7) (3/7) (4/7)

AT-150B SE-511 3-14
AT-127 SE-511 3-15
Audio (1/2) 3-16
CP-373/315 (5/7), FP-118A/118 (1/4), SW-19
Audio (2/2) 3-17
AA-104, CP-373/315 (6/7), CN-1867, FP-118A/118 (2/4), LE-221 (2/2)
System Control (1/2) 3-18
FP-118A/118 (3/4), KY-405, LE-221 (1/2)
System Control (2/2) 3-19
CP-373/315 (7/7), FP-118A/118 (4/4), FP-99, SW-929
RP-91 3-20
Servo (1/3) 3-21
CC-68, HN-227 (1/3), MT-114 (1/2), SE-295, SE-297, SV-213 (1/3)
Servo (2/3) 3-22
HN-227 (2/3), SV-213 (2/3)
Servo (3/3) 3-23
DU-36, HN-227 (3/3), MB-833, MT-114 (2/2), SV-213 (3/3)
DV-21C/21 3-24
VE-44 3-25

4. Schematic Diagrams and Frame Wiring

Index 4-1
Frame Wiring 4-3
PA-254 (B) 4-4
PA-255 (G) 4-4
PA-256 (R) 4-4
PA-219 (B) 4-5
PA-220 (G) 4-5
PA-221 (R) 4-5
TG-204 4-6
VA-190 4-10
DPR-141B/141 4-16
ES-26 4-34
AT-150B 4-42
SE-511 4-42
AT-127 4-46
CN-1811 4-49
FP-118A/118 4-50
KY-405 4-50
FP-99 4-59
GCN-16 4-59
SW-929 4-59

RP-91 4-60
SE-298 4-64
SV-213 4-64
CC-68 4-72
HN-227 4-72
MT-114 4-72
SE-295 4-72
SE-297 4-72
AA-104 4-73
CN-1866 4-73
CN-1867 4-73
LE-221 4-73
SW-18 4-73
CN-1864 4-74
CN-1865 4-74
PSW-71 4-74
SW-19 4-74
CP-373 4-75
CN-2277 4-80
CP-315 4-81
CN-1519 4-83
CN-1873 4-83
CN-1874 4-83
PS-570 4-83
CN-1823 4-84
DV-21C/21 4-84
VE-44 4-86
MB-833 4-88
DU-36 4-90

5. Board Layouts

Index 5-1
AA-104 5-2
AT-150 5-3
AT-127 5-4
CC-68 5-5
CN-1823 5-5
CN-1864 5-5
CN-2277 5-5
CN-1865 5-6
CN-1866 5-6

CN-1867 5-6
CN-1873 5-6
CN-1874 5-6
CN-1519 5-7
DU-36 5-7
DV-21 5-7
CP-373 5-8
CP-315 5-9
DPR-141 5-10
ES-26 5-12
FP-118 5-14
FP-99 5-17
GCN-16 5-17
PA-219 5-18
PA-220 5-18
PA-221 5-18
PA-254 5-18
PA-255 5-18
PA-256 5-18
KY-405 5-20
LE-221 5-20
RP-91 5-20
HN-227 5-21
MT-114 5-21
SE-295 5-21
SE-297 5-21
PS-570 5-22
PSW-71 5-22
SE-511 5-22
MB-833 5-23
SV-213 5-24
SW-18 5-26
SW-19 5-26
SW-929 5-26
VE-44 5-26
TG-204 5-27
VA-190 5-28

このマニュアルについて

本書の目的

本書はデジタルカムコーダDSR-570WS/500WS，のサービスマニュアルVol.2です。本書は，サービスエンジニアの方々にご使用いただくことを想定し，部品レベルまでのサービスを前提とした情報（パーツリスト，半導体，ブロック図，回路図，マウント図）を記載しています。

関連マニュアル

この「サービスマニュアル Vol.2」の他に，下記のマニュアルが用意されています。入手を希望される方は，ソニーの営業窓口にお問い合わせください。

- **取扱説明書 DSR-570WS（DSR-570WS に付属）**
  本機を実際に運用および操作するのに必要なマニュアルです。
  入手を希望される方は，ソニーの営業窓口にお問い合わせください。
  部品番号：3-206-359-0X

- **取扱説明書 DSR-500WS（DSR-500WS に付属）**
  本機を実際に運用および操作するのに必要なマニュアルです。
  (1) 下記シリアルNo. の製品はサービスマニュアル Vol.1 DSR-500WS 第 1 章をご覧ください。
  DSR-500WS (J) :シリアル No.30001 ～ 32000
  (2) 部品番号：3-866-520-03
  下記シリアルNo. の製品は本書をご覧ください。
  DSR-500WS (J) :シリアル No.32001 以降

- **サービスマニュアル Vol.1 DSR-570WS（別途用意）**
  本機の部品の交換方法および調整などに関する情報を記載しています。
  入手を希望される方は，ソニーの営業窓口にお問い合わせください。
  部品番号：9-967-975-XX

- **サービスマニュアル Vol.1 DSR-500WS（別途用意）**
  本機の取り扱い，操作方法と部品の交換方法および調整などに関する情報を記載しています。
  入手を希望される方は，ソニーの営業窓口にお問い合わせください。
  部品番号：9-977-385-1X

- **サービスマニュアル DSBK-301A（別途用意）**
  別途発行のインデックスピクチャーボードDSBK-301Aのサービスマニュアルをご覧ください。
  入手を希望される方は，ソニーの営業窓口にお問い合わせください。
  部品番号：9-955-216-0X

- **サービスマニュアル DSBK-501（別途用意）**
  別途発行のアナログコンポジットインプットボードDSBK-501のサービスマニュアルをご覧ください。
  入手を希望される方は，ソニーの営業窓口にお問い合わせください。
  部品番号：9-955-217-0X

・**サービスマニュアル DXF-701/701WS（別途用意）**
別途発行のビューファインダDXF-701/701WSのサービスマニュアルをご覧ください。下記シリアルNo. の製品は本書をご覧ください。
DSR-500WS (J) :シリアルNo.30001 ～ 32000
入手を希望される方は，ソニーの営業窓口にお問い合わせください。
部品番号：9-977-265-0X

・**サービスマニュアル DXF-801（別途用意）**
別途発行のビューファインダDXF-801のサービスマニュアルをご覧ください。
下記シリアルNo. の製品は本書をご覧ください。
DSR-500WS (J) :シリアルNo.32001以降
入手を希望される方は，ソニーの営業窓口にお問い合わせください。
部品番号：9-955-212-0X

・**サービスマニュアル CA-370 (別途用意)**
別途発行のインターカムアダプタCA-370のサービスマニュアルをご覧ください。
入手を希望される方は，ソニーの営業窓口にお問い合わせください。
部品番号：9-967-978-0X

・**サービスマニュアル CA-WR855（別途用意）**
別途発行のカメラアダプタCA-WR855のサービスマニュアルをご覧ください。
入手を希望される方は，ソニーの営業窓口にお問い合わせください。
部品番号：9-955-215-0X

・**サービスマニュアル VCT-U14（別途用意）**
別途発行の三脚アタッチメントVCT-U14のサービスマニュアルをご覧ください。
入手を希望される方は，ソニーの営業窓口にお問い合わせください。
部品番号：9-977-221-0X

・**“Semiconductor Pin Assignments”CD-ROM版（別途用意）**
この“Semiconductor Pin Assignments” CD-ROM版は，B&Pカンパニーの機器に使用されている半導体を検索することができます。
このCD-ROMで検索できない半導体は，その半導体が使用されている機種のサービスマニュアルに記載されています。サービスマニュアルには，その機種に使用されているすべての半導体一覧とそのID番号を記載していますので，このCD-ROM版と合わせて使用してください。
部品番号： 9-968-546-XX

構成

本書の構成を把握していただくために，全章の概略を以下に説明します。

Section 1 Parts List

分解図および機構部品リスト，電機部品リストを記載しています。

Section 2 Semiconductor Pin Assignments

本機で使用している半導体の型名一覧とその半導体標準図検索用ID番号を記載しています。
別売の“Semiconductor Pin Assignments”CD-ROM 版と合わせてご覧ください。
また，本書作成時に，CD-ROM版に含まれていない半導体標準図がある場合は，本章に追加掲載しています。

Section 3 Block Diagrams

各基板の機能や信号の流れを示すブロック図を記載しています。

Section 4 Schematic Diagrams and Frame Wiring

全プリント基板の回路図とフレーム図を記載しています。

Section 5 Board Layouts

基板のマウント図を記載しています。

Manual Structure

Purpose of this manual

This manual is the Service Manual Vol. 2 of the digital camcorder DSR-570WS/570WSP/500WS/500WSP.
This manual is intended for use by trained sevice enginneers, and describes information (parts lists, semiconductor pin assignments, block diagrams, schematic diagrams and board layouts) on the premise of component level service.

Related manuals

Besides to this Service Manual Vol. 2, the following manuals are provided.
For obtaining, contact your local Sony Sales Office/Service Center.

- **Operating Instructions DSR-570WS/570WSP (Supplied with the DSR-570WS/570WSP)**
  This manual is necessary for the installation and the operation of this unit.
  For obtaining, contact your local Sony Sales Office/Service Center.
  Part No. 3-206-359-1X

- **Instruction Manual DSR-500WS/500WSP (Supplied with the DSR-500WS/500WSP)**
  This manual is required for the proper operation and application of this unit.
  (1) For the products of following Serial No. , please see the Section 1 of DSR-500WS/500WSP service manual volume 1.
  DSR-500WS (UC) : Serial No.10001 through 12000
  DSR-500WSP (CE) : Serial No.40001 through 42000
  (2) Part No. 3-866-520-13
  For the products of following Serial No., please see this manual.
  DSR-500WS (UC) : Serial No.12001 and Higher
  DSR-500WSP (CE) : Serial No.42001 and Higher

- **Service Manual Vol. 1 DSR-570WS/570WSP (Available on request)**
  Contains the instruction manual related to the operations of this unit, the replacement of the parts and adjustments.
  For obtaining, contact your local Sony Sales Office/Service Center.
  Part No. 9-967-976-XX

- **Service Manual Vol. 1 DSR-500WS/500WSP (Available on request)**
  Contains the instruction manual related to the operations of this unit, the replacement of the parts and adjustments.
  For obtaining, contact your local Sony Sales Office/Service Center.
  Part No. 9-977-384-1X

- **Service Manual DSBK-301A (Available on request)**
  See the index picture board DSBK-301A service manual available separately.
  For obtaining, contact your local Sony Sales Office/Service Center.
  Part No. 9-955-216-0X

- **Service Manual DSBK-501/501P (Available on request)**
  See the analog composite input board DSBK-501/501P service manual available separately.
  For obtaining, contact your local Sony Sales Office/Service Center.
  Part No. 9-955-217-0X

- **Service Manual DXF-701/701CE/701WS/701WSCE (Available on request)**
  See the viewfinder DXF-701/701CE/701WS/701WSCE service manual available separately.
  For the products of following Serial No., please see this manual.
  DSR-500WS (UC) : Serial No.10001 through 12000
  DSR-500WSP (CE) : Serial No.40001 through 42000
  For obtaining, contact your local Sony Sales Office/Service Center.
  Part No. 9-977-265-0X

- **Service Manual DXF-801/801CE (Available on request)**
  See the viewfinder DXF-801/801CE service manual available separately.
  For the products of following Serial No.,please see this manual.
  DSR-500WS (UC) : Serial No.12001 and Higher
  DSR-500WSP (CE) : Serial No.42001 and Higher
  For obtaining, contact your local Sony Sales Office/Service Center.
  Part No. 9-955-212-0X

- **Service Manual CA-370 (Available on request)**
  See the intercom adaptor CA-370 service manual available separately.
  For obtaining, contact your local Sony Sales Office/Service Center.
  Part No. 9-967-978-0X

- **Service Manual CA-WR855 (Available on request)**
  See the CA-WR855 service manual available separately.
  For obtaining, contact your local Sony Sales Office/Service Center.
  Part No. 9-955-215-0X

- **Service Manual VCT-U14 (Available on request)**
  See the tripod adaptor VCT-U14 service manual available separately.
  For obtaining, contact your local Sony Sales Office/Service Center.
  Part No. 9-977-221-0X

- **“Semiconductor Pin Assignments” CD-ROM (Available on request)**
  This “Semiconductor Pin Assignments” CD-ROM allows you to search for semiconductors used in B&P Company equipment.
  Semiconductors that cannot be searched for on this CD-ROM are listed in the service manual for the corresponding unit. The service manual contains a complete list of all semiconductors and their ID Nos., and thus should be used together with the CD-ROM.
  Part number: 9-968-546-XX

Contents

The following is a summary of all the sections for understanding the contents of this manual.

Section 1 Parts List

Describes the exploded views, the mechanical parts list, and the electrical parts list.

Section 2 Semiconductor Pin Assignments

Contains information on semiconductors used for the unit.
It includes a complete list of the semiconductors and their ID Nos. for retrieving information on “Semiconductor Pin Assignments” CD-ROM, which is available separately.
Please refer to this section together with the “Semiconductor Pin Assignments” CD-ROM.
Information on the semiconductors not contained in the CD-ROM at the time of issue of this manual, if any, is given in this section as well.

Section 3 Block Diagrams

Describes the block diagrams which show each board function and signal flow.

Section 4 Schematic diagrams and Frame Wiring

Describes the schematic diagrams of all circuit boards and the frame wiring.

Section 5 Board Layouts

Describes the board layouts for the unit.

Section 1
Parts List

1-1. Notes on Repair Parts

1. Safety Related Components Warning

WARNING

Components marked ⚠ are critical to safe operation. Therefore, specified parts should be used in the case of replacement.

2. Standardization of Parts

Some repair parts supplied by Sony differ from those used for the unit. These are because of parts commonality and improvement.
Parts list has the present standardized repair parts.

3. Stock of Parts

Parts marked with “o” at SP (Supply Code) column of the spare parts list may not be stocked. Therefore, the delivery date will be delayed.

4. Harness

Harnesses with no part number are not registered as spare parts.
In need of repair, get components shown in the list and repair using them.

1-1. 補修部品注意事項

1. 安全重要部品

⚠警告

⚠印のついた部品は安全性を維持するために重要な部品です。したがって，交換する時は必ず指定の部品を使ってください。

2. 部品の共通化

ソニーから供給する補修用部品は，セットに使われているものと異なることがあります。
これは部品の共通化，改良等によるものです。
部品表には現時点での共通化された補修用部品が記載されています。

3. 部品の在庫

部品表のSP (Supply code) 欄に“o”で示される部品は在庫していないことがあり，納期が長くなることがあります。

4. ハーネス

部品番号が記載されていないハーネスは，サービス部品として登録されていません。
これらは，リストに展開されているコンポーネント部品で補修してください。

1-2. Exploded Views

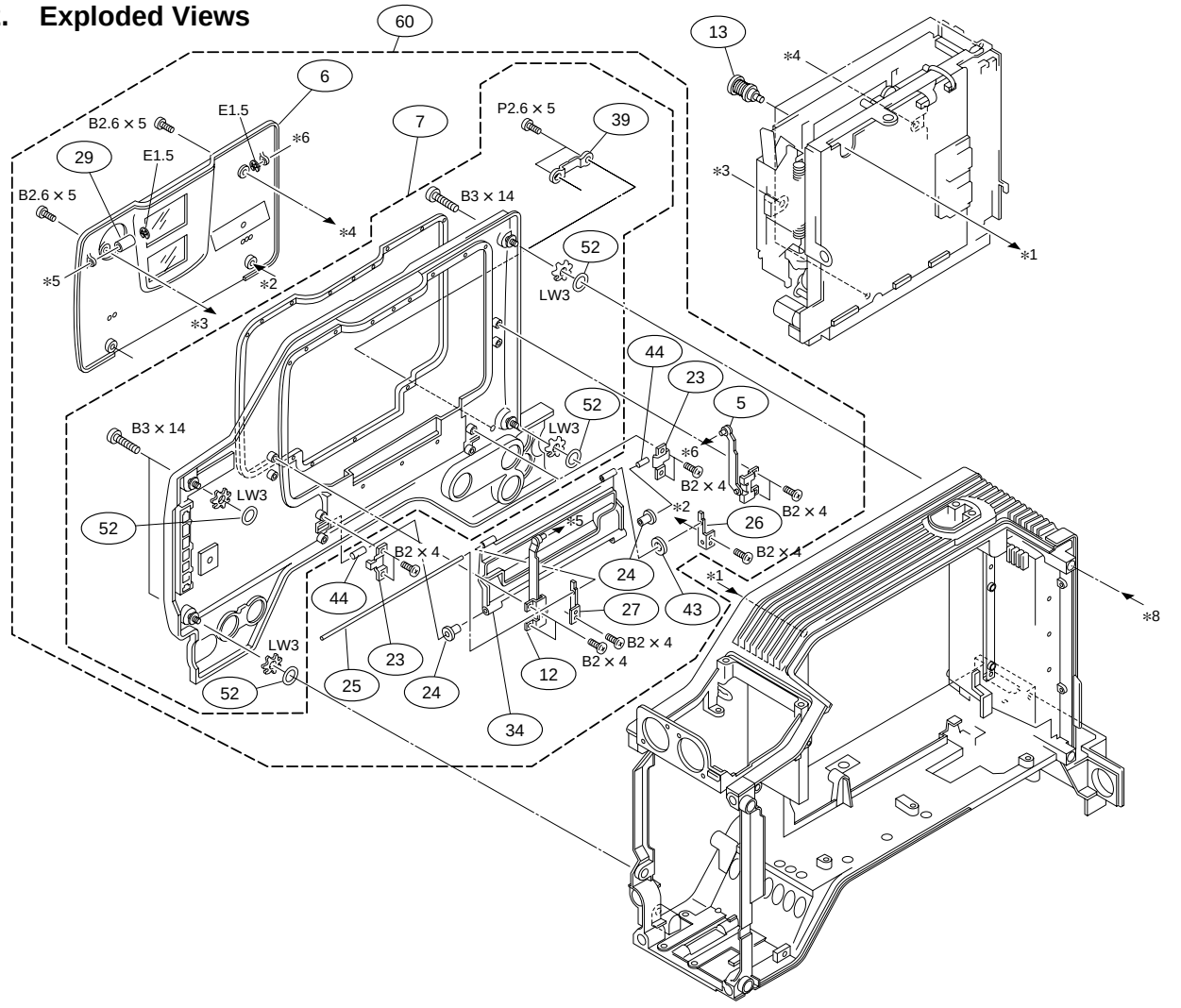

No.	Part No.	SP	Description
*1,*2:For DSR-500WS/500WSP			
*1:Serial No. 10001-12932(UC), 30001-32232(J), 40001-45215(CE)			
*2:Serial No. 12933- (UC), 32233- (J), 45216- (CE)			
1	A-8322-152-A	o	MOUNTED CIRCUIT BOARD, FP-118 [for DSR-500WS/500WSP]
	A-8329-963-A	s	MOUNTED CIRCUIT BOARD, FP-118A [for DSR-570WS/570WSP]
2	A-8318-188-A	o	MOUNTED CIRCUIT BOARD, KY-405
3	A-8322-170-A	o	MOUNTED CIRCUIT BOARD, GCN-16
4	A-8318-233-A	o	MOUNTED CIRCUIT BOARD, FP-99
5	X-3604-530-1	o	SUPPORT L-M ASSEMBLY, ARM
6	X-3604-535-4	s	LID ASSEMBLY, CASSETTE COMPARTMENT [for DSR-500WS/500WSP]
	X-3608-412-1	s	LID ASSY, CASSETTE COMPARTMENT [for DSR-570WS/570WSP]
7	X-3605-487-5	o	L PANEL(WS) SUB ASSEMBLY [for DSR-500WS/500WSP]
	X-3608-408-1	o	SUB ASSY, L PANEL (WS) [for DSR-570WS/570WSP]
8	3-612-570-11	o	PAD, R [for DSR-500WS/500WSP]
	3-612-570-03	o	PAD, R (ABS) [for DSR-570WS/570WSP]
9	X-3604-538-5	s	COVER ASSEMBLY, FP [for DSR-500WS/500WSP]
	X-3608-410-1	s	COVER ASSY, FP [for DSR-570WS/570WSP]
10	X-3605-489-7	s	R PANEL(WS) SUB ASSEMBLY [for DSR-500WS/500WSP]
	X-3608-413-1	o	SUB ASSY, R PANEL (B) [for DSR-570WS/570WSP]
11 *2	X-3608-411-1	o	SUB ASSY, KEY PANEL
*1	X-3605-818-1	o	SUB ASSEMBLY, KEY PANEL [for DSR-500WS/500WSP]
12	X-3678-799-5	o	SUPPORT L ASSEMBLY, ARM
13	X-3678-976-3	s	SCREW ASSEMBLY, MD
14	1-473-406-12	s	ENCODER, ED JOG
15	1-544-559-11	s	SPEAKER
16	1-550-414-31	o	HOLDER, BATTERY
17	1-669-104-12	o	PRINTED WIRING BOARD, SW-929
18	1-777-902-11	o	CABLE, FLAT (10-CORE)
19	1-783-363-11	s	CABLE, FLAT (10-CORE)
20	3-176-488-01	s	SHEET, VR
21	3-604-358-01	o	KNOB(H), SW
22	3-604-373-03	o	COVER, BATTERY
23	3-604-805-01	o	CLAMP B, SHAFT
24	3-604-806-01	o	SUPPORT, SHAFT
25	3-604-889-01	o	SHAFT R1, ARM
26	3-604-897-01	o	FL, SUPPORT
27	3-604-898-01	o	FR, SUPPORT
28	3-605-437-01	o	SUPPORT, KNOB

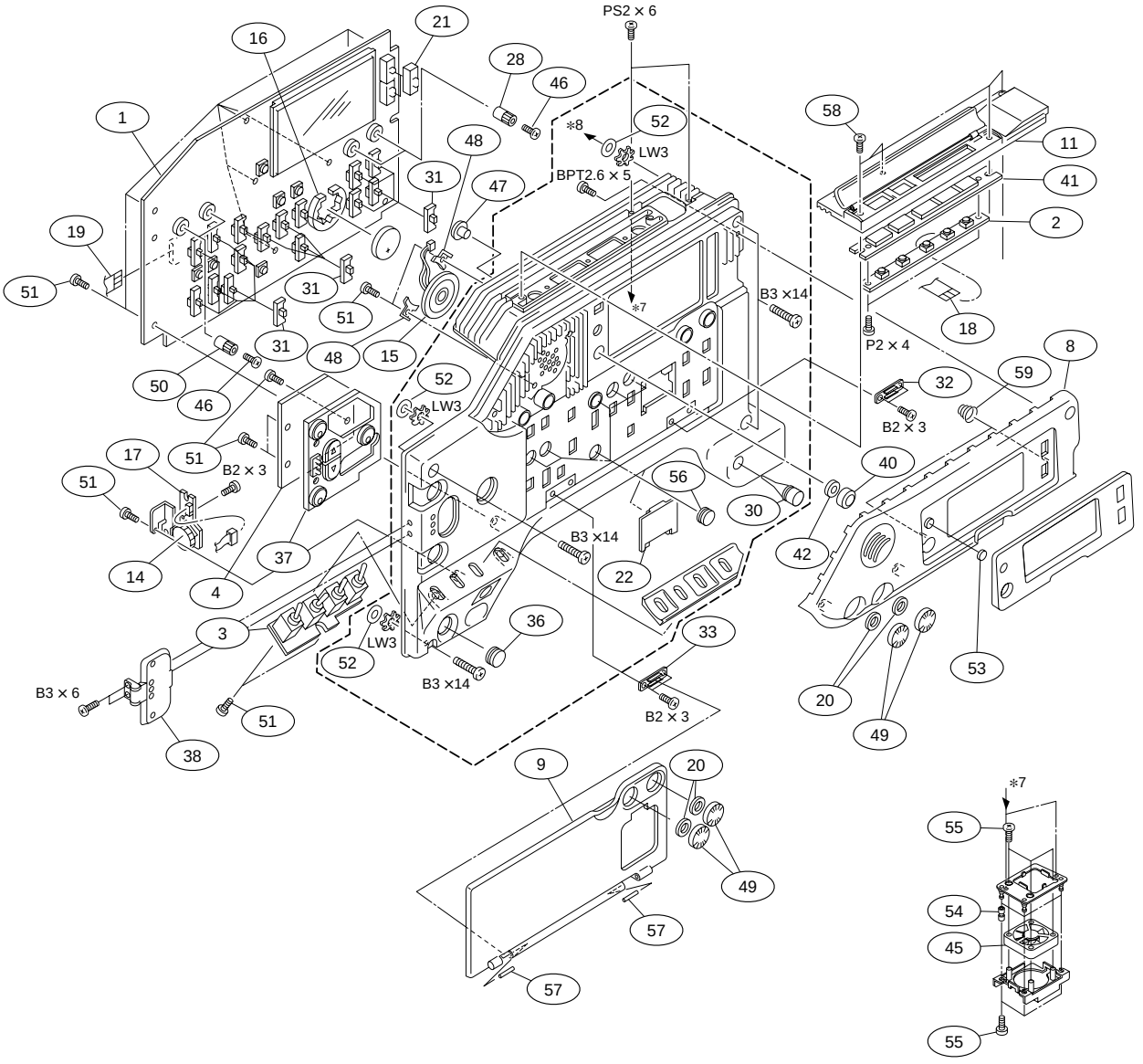

No.	Part No.	SP	Description
29	3-605-946-01	o	ROLLER, F
30	3-607-206-02	s	FOOT, RUBBER
31	3-612-528-01	s	KNOB(M), SW
32	3-612-529-01	s	HINGE(F), FP
33	3-612-530-01	s	HINGE(R), FP
34	3-612-572-02	o	SUPPORT PANEL, SUB [for DSR-500WS/500WSP]
	3-612-572-21	o	SUPPORT PANEL, SUB [for DSR-570WS/570WSP]
36	3-612-632-02	s	COVER, SW(H)
37	3-612-674-01	s	COVER, SWITCH
38	X-3605-488-1	s	GUARD ASSEMBLY, SW
39	3-617-811-01	s	HOLDER, CLAMP
40	3-679-086-01	s	BUTTON, PUSH
41	3-679-501-01	o	COVER, RUBBER KEY BOARD
42	3-686-086-01	s	CUSHION, BUTTON
43	3-701-437-11	s	WASHER
44	3-703-358-06	s	PIN, PARALLEL (DIA. 2X14)
45	1-763-337-11	s	MOTER, DC FAN
46	3-704-244-41	s	SCREW (P1.7X3.0)
47	3-718-694-01	s	PIN, PUSH BUTTON
48	3-724-726-01	o	HOLDER, SPEAKER
49	3-724-755-04	s	KNOB (F), VR

No.	Part No.	SP	Description
50	3-744-304-01	s	KNOB (SUPPORT)
51	3-625-924-01	s	ALOCK SCREW, +B2.6 NI
52	3-672-250-01	s	RING (M2.6), O
53	3-717-936-03	o	COVER, LED
54	3-617-812-01	o	VIBRATION PROOF, RUBBER
55	4-963-924-01	s	SCREW (DAMPER)
56	3-672-244-21	s	COVER, SWITCH
57	3-703-358-09	s	PIN, PARALLEL (DIA. 2X25)
58	3-694-181-02	s	SCREW, ALOCK PRECISION +P2.6X5
59	3-622-568-01	o	SPRING, GROUND
60	A-8279-116-F	o	PANEL ASSY (WS), L [for DSR-500WS/500WSP]
	A-8279-673-A	o	PANEL ASSY (WS), L [for DSR-570WS/570WSP]

Bottom/Rear Frame

No.	Part No.	SP	Description
101	A-8278-413-E	s	PLATE, CP ASSEMBLY
102	A-8278-790-C	o	PANEL ASSEMBLY, BOTTOM [for DSR-500WS/500WSP]
	A-8279-670-A	o	PANEL ASSY, BOTTOM (A) [for DSR-570WS/570WSP]
103	A-8278-792-C	o	PANEL ASSEMBLY, REAR
104	A-8278-807-D	o	PAD ASSEMBLY, SHOULDER
105	A-8317-811-A	o	MOUNTED CIRCUIT BOARD, CN-1519 [for DSR-500WS/500WSP]
	A-8329-788-A	s	MOUNTED CIRCUIT BOARD, CN-2277 [for DSR-570WS/570WSP]
106	A-8318-040-A	o	MOUNTED CIRCUIT BOARD, CP-315 [for DSR-500WS/500WSP]
	A-8329-787-A	s	MOUNTED CIRCUIT BOARD, CP-373 [for DSR-570WS/570WSP]
107	A-8322-176-A	o	MOUNTED CIRCUIT BOARD, PS-570
108	A-8327-542-A	s	CONVERTER ASSY, DD
109	1-563-929-11	s	CONNECTOR, 4P FEMALE “DC OUT”
110	1-572-042-11	s	SWITCH, SLIDE
111	1-573-590-13	s	CONNECTOR, S-TERMINAL 4P FEMALE “S VIDEO OUT”
112	1-673-955-11	o	PRINTED WIRING BOARD, CN-1873
113	1-766-386-14	s	CONNECTOR, XLR 3P FEMALE “AUDIO IN CH-1/CH2”
114	1-766-566-11	o	CONNECTOR, 26P MALE “ EXT VTR”
115	1-778-787-13	s	CONNECTOR, COAXIAL BNC “GENLOCK IN /TC IN/TC OUT/MONITOR OUT”
116	1-778-788-12	s	JACK, 2P “AUDIO OUT CH-1/CH-2”
117	1-958-497-11	s	HARNESS, SUB (BATTERY)
118	3-604-359-01	o	ADAPTOR, SW
119	3-604-376-01	o	PLATE, CP
121	3-613-330-01	s	SCREW, PRECISION +P2.6X6
122	3-613-650-01	s	SPACER
123	3-679-648-02	o	SPRING, COMPRESSION
124	3-679-688-02	o	LEVER, RELEASE
125	3-680-952-01	o	KNOB, RELEASE LEVER
126	3-711-703-01	o	STOPPER
127	3-718-694-01	s	PIN, PUSH BUTTON
128	3-729-076-01	s	SCREW (+B 2X3)
129	3-846-067-21	o	SPACER (C)
130	4-622-069-01	s	SUPPORT, MODEM
131	1-958-496-12	s	HARNESS, SUB (POWER LINE)
132	3-625-924-01	S	ALOCK SCREW, +B2.6 NI
133	A-8322-181-B	o	MOUNTED CIRCUIT BOARD, CN-1823
134	3-617-827-01	s	COVER, DV [for DSR-500WS/500WSP]
	3-617-827-02	s	COVER, DV [for DSR-570WS/570WSP]
135	3-617-828-02	o	BOX, DV [for DSR-500WS/500WSP]
	3-617-828-11	o	BOX, DV [for DSR-570WS/570WSP]
136	3-719-381-11	s	SCREW (M2X5)
137	3-622-445-02	s	SCREW, (+B3X18)
138	3-742-074-11	s	SCREW (3)

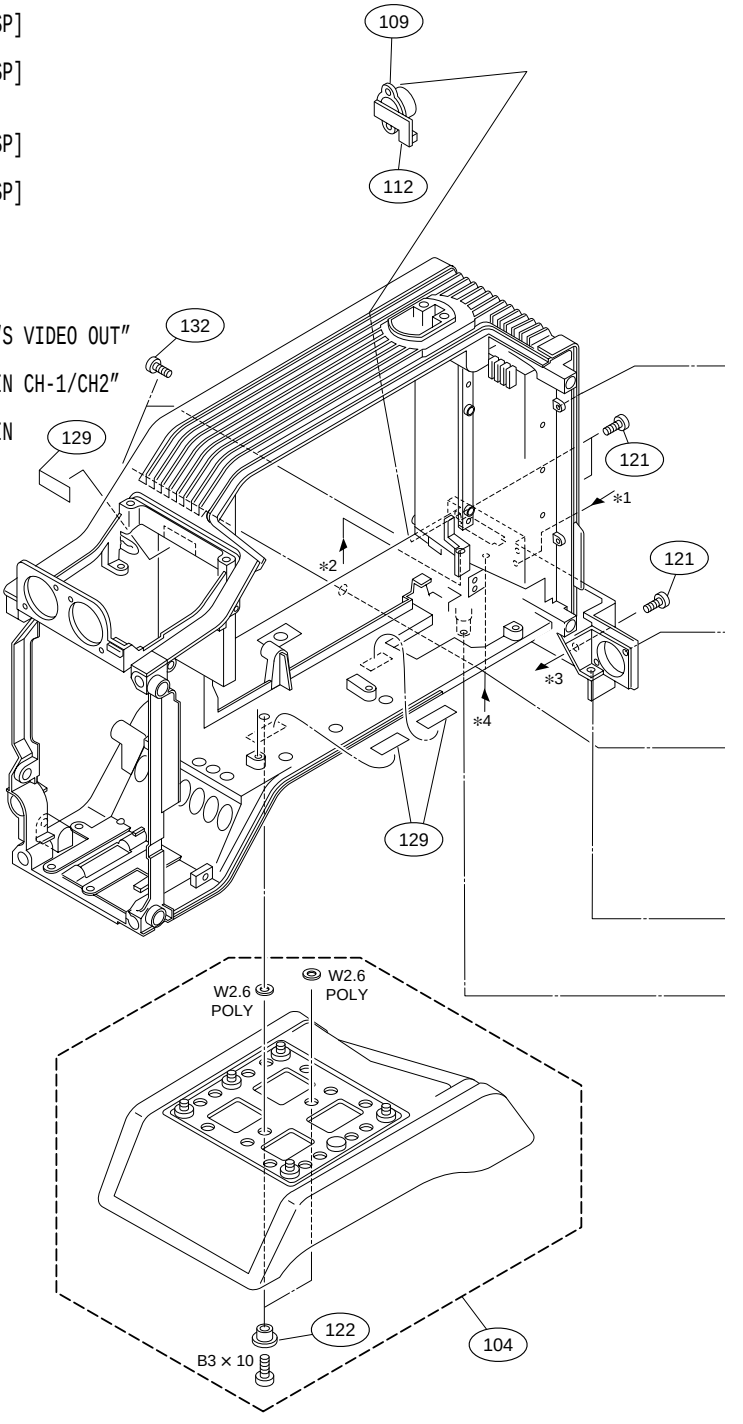

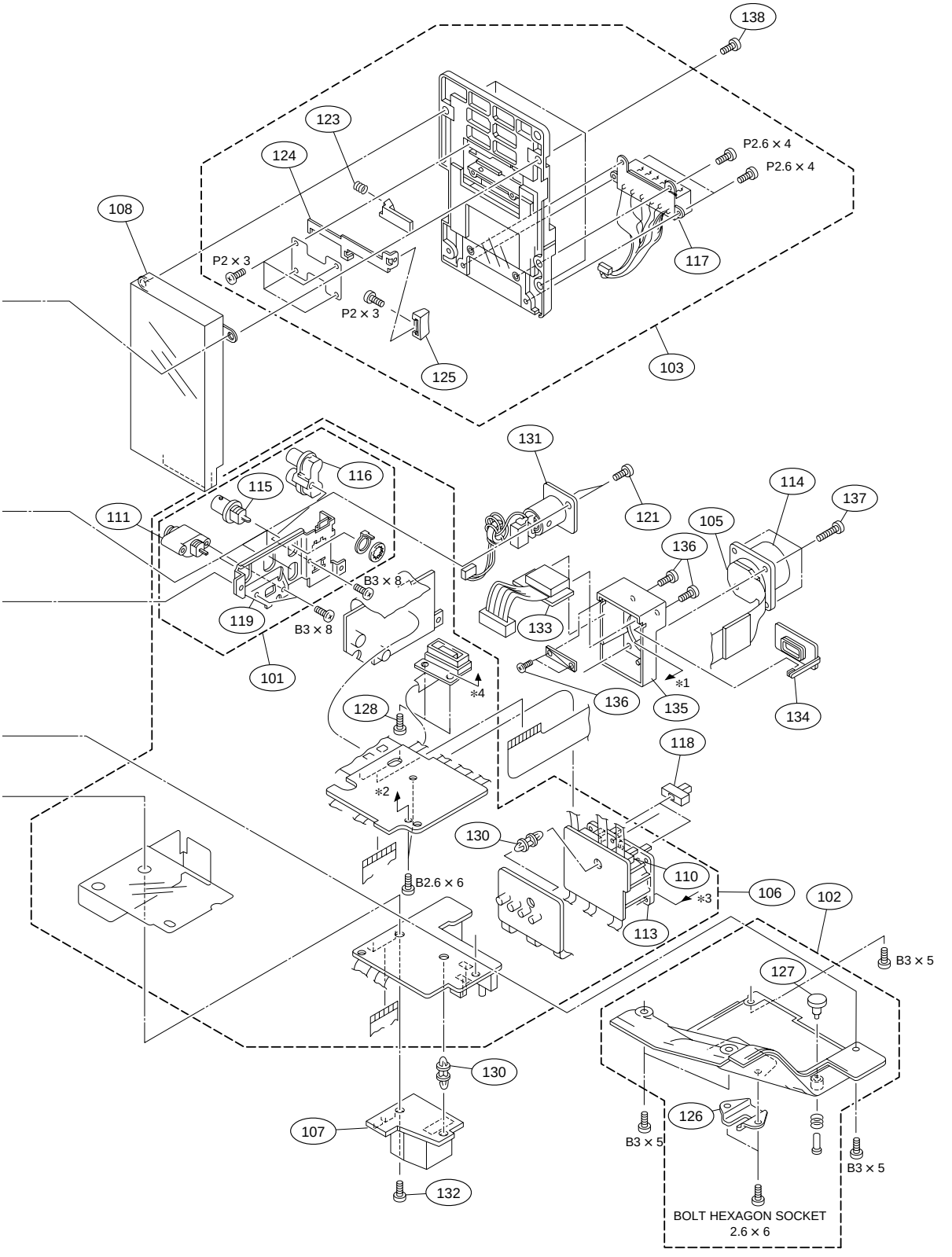
138
123
124
P2.6 × 4
P2.6 × 4
108
P2 × 3
117
P2 × 3
125
103
131
121
114
137
116
115
111
105
136
B3 × 8
133
119
B3 × 8
101
*4
136
135
*1
134
128
118
*2
130
110
106
102
B2.6 × 6
*3
113
B3 × 5
127
130
126
107
B3 × 5
B3 × 5
132
BOLT HEXAGON SOCKET
2.6 × 6

No.	Part No.	SP	Description
*1:For DSR-500WS/500WSP			
*1:Serial No. 10001-12000(UC), 30001-32000(J), 40001-40850(CE)			
201	A-8322-150-B	o	MOUNTED CIRCUIT BOARD, MB-833
202	A-8322-183-A	s	MOUNTED CIRCUIT BOARD, DPR-141 [for DSR-500WS/500WSP]
	A-8344-128-A	s	MOUNTED CIRSUIT BOARD, DPR-141B [for DSR-570WS/570WSP]
203	A-8322-148-B	o	MOUNTED CIRCUIT BOARD, ES-26 [for DSR-570WS/500WS]
	A-8322-194-B	o	MOUNTED CIRCUIT BOARD, ES-26(P) [for DSR-570WSP/500WSP]
204	A-8322-146-A	o	MOUNTED CIRCUIT BOARD, VA-190
205	A-8322-144-A	o	MOUNTED CIRCUIT BOARD, AT-127 [for DSR-500WS/500WSP]
	A-8329-974-A	s	MOUNTED CIRCUIT BOARD, AT-150B [for DSR-570WS/570WSP]
206	A-8322-177-A	o	MOUNTED CIRCUIT BOARD, SW-19
207	A-8322-168-A	o	MOUNTED CIRCUIT BOARD, CN-1865
208	A-8322-167-A	o	MOUNTED CIRCUIT BOARD, CN-1864
209	A-8322-165-B	o	MOUNTED CIRCUIT BOARD, AA-104
210	A-8322-174-A	o	MOUNTED CIRCUIT BOARD, PSW-71
211	A-8322-186-A	o	MOUNTED CIRCUIT BOARD, DV-21 [for DSR-500WS/500WSP]
	A-8344-126-A	s	MOUNTED CIRCUIT BOARD, DV-21C [for DSR-570WS/570WSP]
212	A-8322-359-A	o	MOUNTED CIRCUIT BOARD, VE-44
213	1-562-221-31	s	CONNECTOR, 12P FEMALE “LENS”
214	1-562-382-31	s	CONNECTOR, BNC “VIDEO OUT”
215	1-565-443-11	s	CONNECTOR, 10P FEMALE “REMOTE”
216	1-570-984-11	s	SWITCH, TOGGLE
217	1-673-954-11	o	PRINTED WIRING BOARD, DU-36
218	1-764-394-11	s	CONNECTOR, XLR 3P FEMALE “MIC IN +48V”
219	1-777-865-13	s	CABLE, FLAT (40-CORE)
220	1-777-866-12	s	CABLE, FLAT (45-CORE)
221	1-777-867-12	s	CABLE, FLAT (50-CORE)

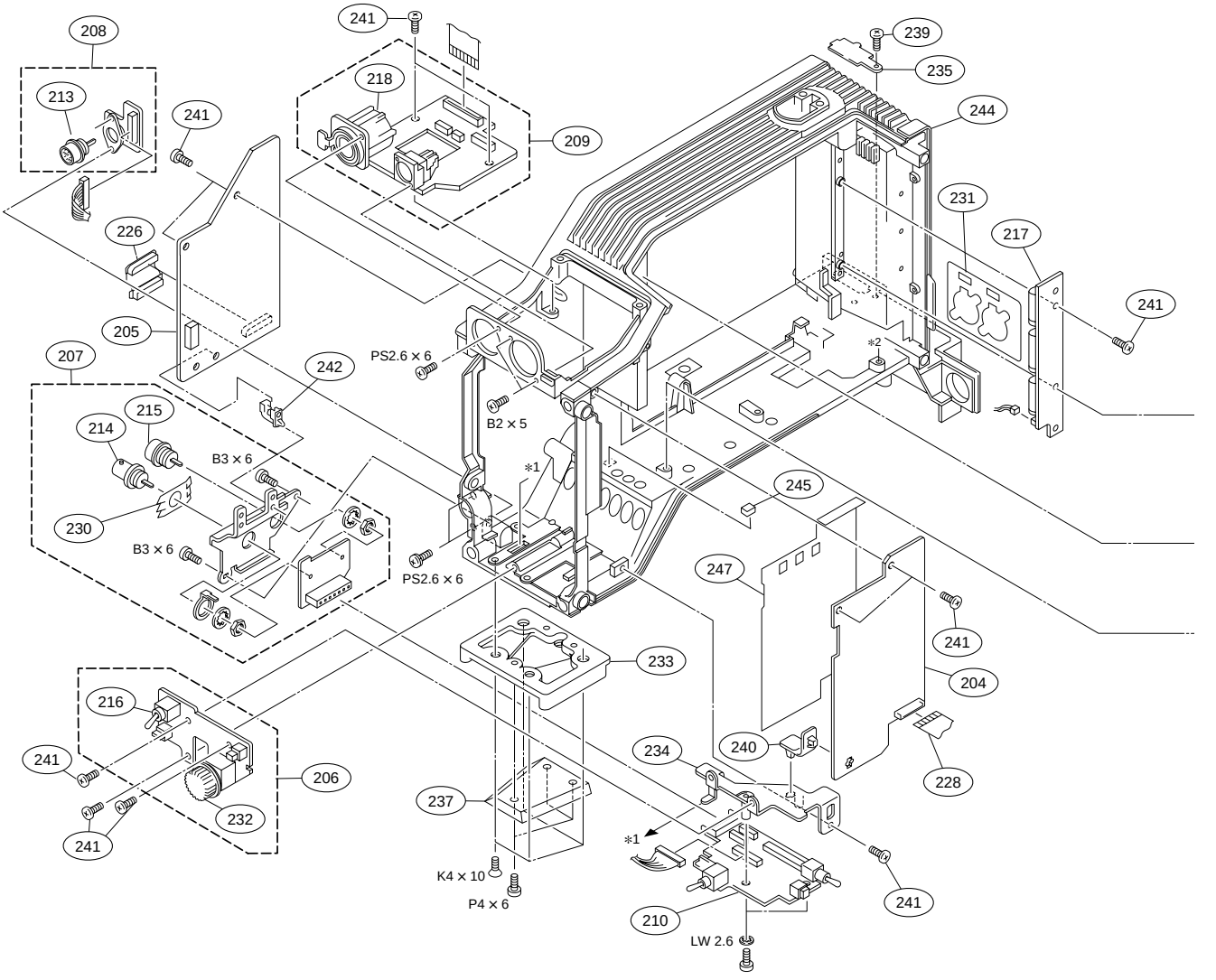

No.	Part No.	SP	Description
222	1-783-282-14	s	CABLE, FLAT (50-CORE)
223	1-783-283-13	s	CABLE, FLAT (50-CORE)
224	1-790-768-11	s	CABLE, FLAT (45-CORE)
225	1-783-285-13	s	CABLE, FLAT (50-CORE)
226	A-8322-163-A	o	MOUNTED CIRCUIT BOARD, CN-1811
228	1-783-288-13	s	CABLE, FLAT (30-CORE)
229 *1	3-603-737-01	o	LEVER, BOARD
230	3-604-416-01	o	SHIELD FINGER(CN)
231	3-612-575-01	o	LABEL, BOX
232	3-612-604-01	s	KNOB, VR(AUDIO)
233	3-612-631-01	o	SHOE(S), CAMERA
234	3-612-663-02	s	BRACKET, PSW
235	3-612-698-02	o	COVER, CN(WIRELESS)
236	3-612-743-03	s	SHEET, FP

No.	Part No.	SP	Description
237	3-716-391-01	o	WEDGE, MOUNTING
239	3-965-077-01	s	SCREW, SPECIAL (M2)
240	4-313-732-00	o	CLIP, HINGE, CIRCUIT BOARD
241	3-625-924-01	s	ALOCK SCREW, +B2.6 NI
242	3-175-660-01	o	HINGE, PC BOARD
243	3-729-013-41	o	SCREW(M1.4X3.5), WASHER HEAD(+P)
244	3-613-310-15	o	FRAME [for DSR-500WS/500WSP]
	3-613-310-21	o	FRAME [for DSR-570WS/570WSP]
245	3-625-908-01	o	SPACER
246	X-3604-621-1	o	SHEET, DUST PROTECTION ASSEMBLY
247	3-690-627-01	o	SHEET, VA

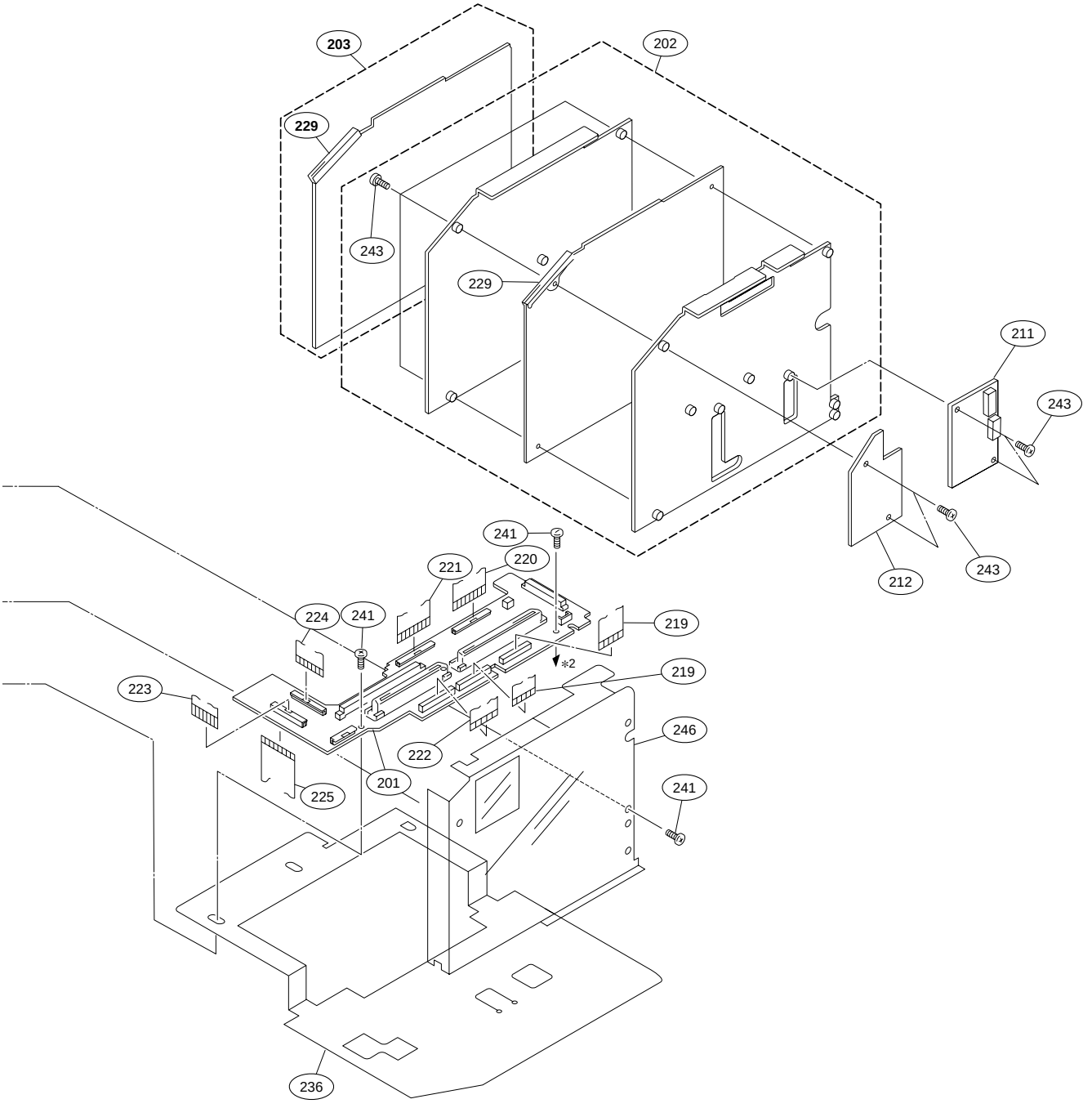

No.	Part No.	SP	Description
*1:For DSR-500WS/500WSP			
*1:Serial No. 12933- (UC), 32233- (J), 45216- (CE)			
301	A-8322-435-A	s	CCD UNIT-R500WS(N) [for DSR-570WS/500WS]
	A-8322-436-A	s	CCD UNIT-R500WSP(P) [for DSR-570WSP/500WSP]
302	1-758-131-11	o	FILTER UNIT, OPTICAL
303	3-604-391-01	o	COVER, SW(M)
305	A-8322-142-A	o	MOUNTED CIRCUIT BOARD, TG-204
306	3-708-987-01	s	RING, BAYONET [for DSR-570WS/500WS]
	3-708-651-01	s	RING, BAYONET [for DSR-570WSP/500WSP]
307	3-617-801-03	o	PANEL, FRONT [for DSR-500WS/500WSP]
	3-613-310-21	o	PANEL, FRONT [for DSR-570WS/570WSP]

No.	Part No.	SP	Description
308	3-672-221-02	s	PACKING, CONTROL
309	3-672-250-01	s	RING (M2.6), O
310	3-678-629-00	s	LEVER, MOUNT
311	3-617-819-01	s	CLAMP
312	3-686-269-02	s	STOPPER, MOUNT
313	3-710-054-01	s	KNOB, FILTER
314	3-699-048-01	s	CAP, MOUNT
315	3-701-506-01	s	SET SCREW, DOUBLE POINT 3X4
316	3-184-550-31	s	SCREW, +B2.6X4
317	3-686-191-01	o	PLATE, FILTER-ID
318	3-604-394-01	o	FINGER, SHIELD(A)
319	3-729-076-11	s	SCREW +B2X4 (STEEL)

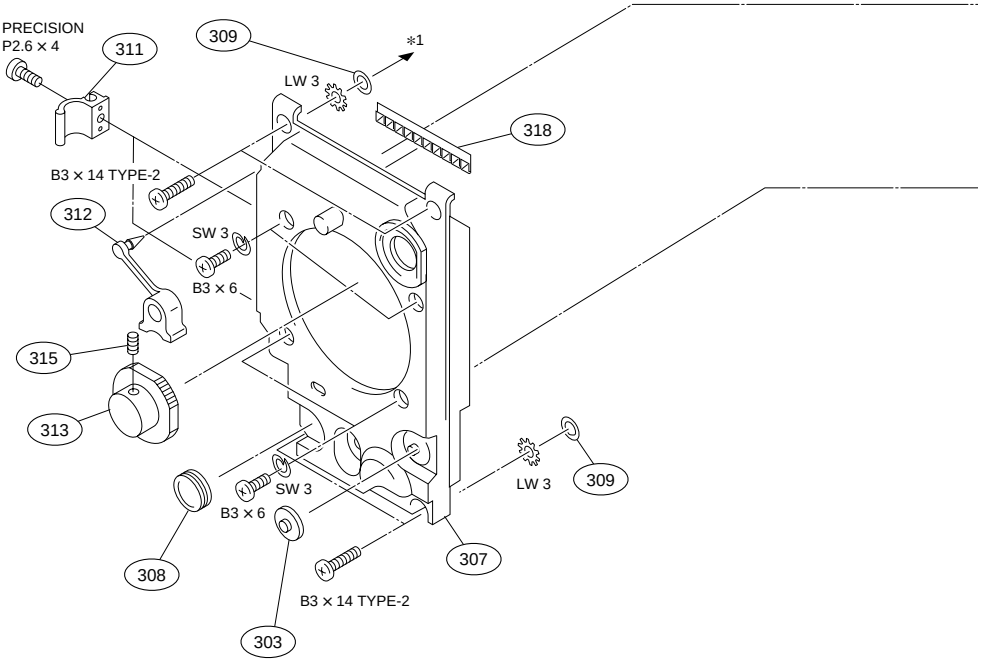

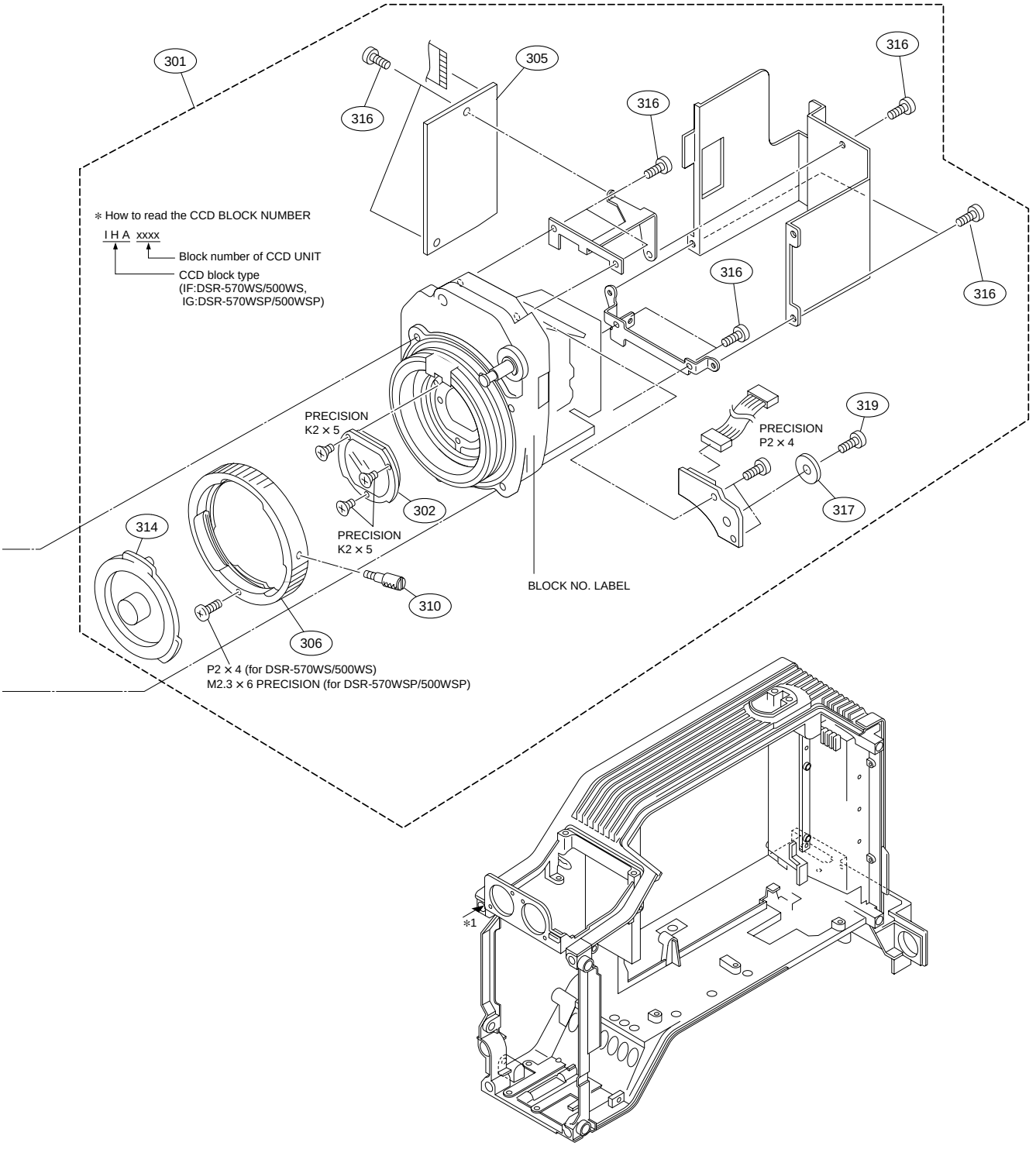
301
305
316
316
316
316
316
316
✻ How to read the CCD BLOCK NUMBER
I H A xxxx
Block number of CCD UNIT
CCD block type
(IF:DSR-570WS/500WS,
IG:DSR-570WSP/500WSP)
PRECISION
K2 × 5
302
PRECISION
K2 × 5
319
PRECISION
P2 × 4
317
314
310
306
BLOCK NO. LABEL
P2 × 4 (for DSR-570WS/500WS)
M2.3 × 6 PRECISION (for DSR-570WSP/500WSP)
✻1

Handle Block

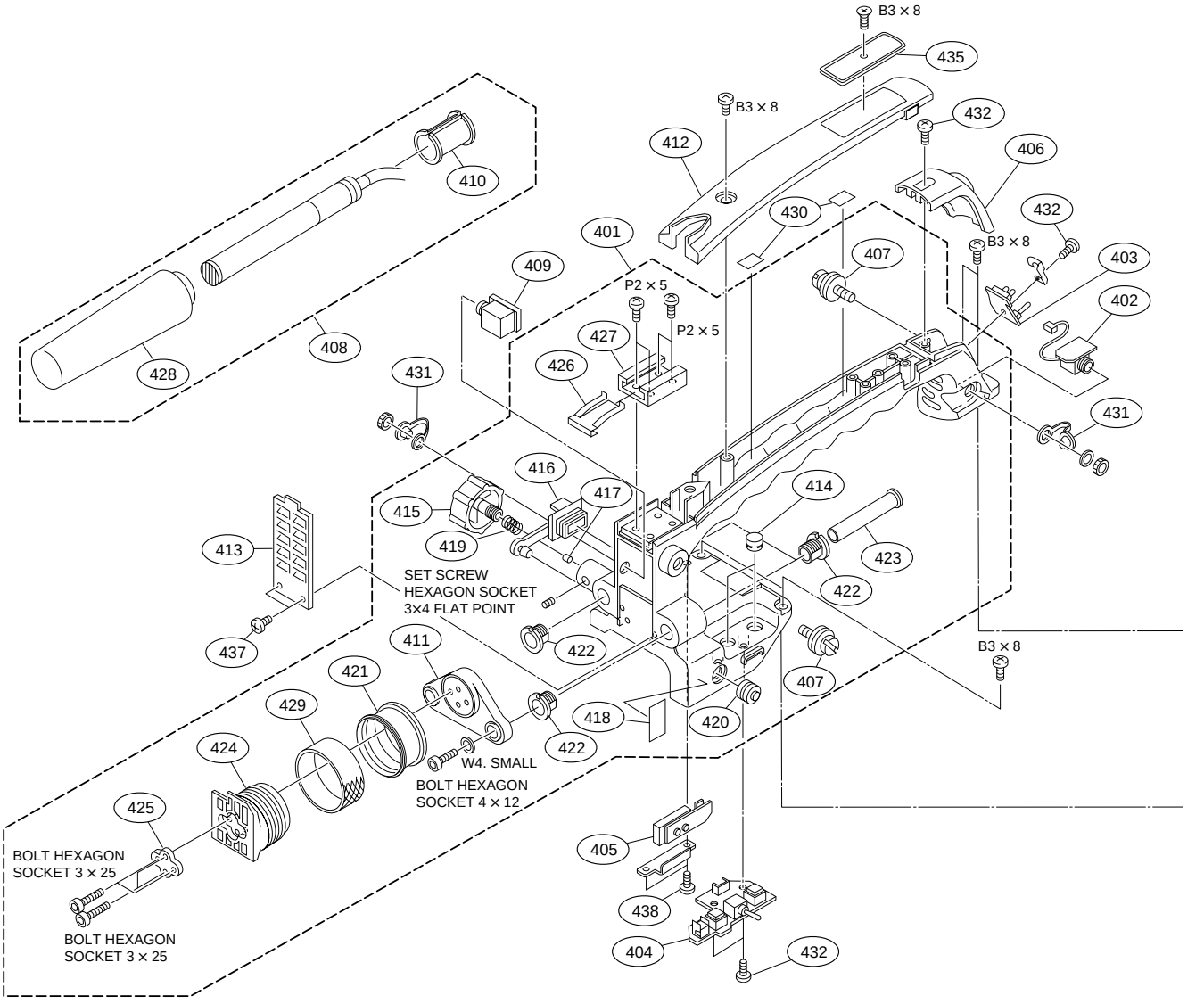

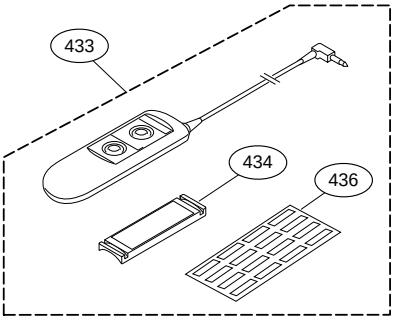

for DSR-500WS-500WSP

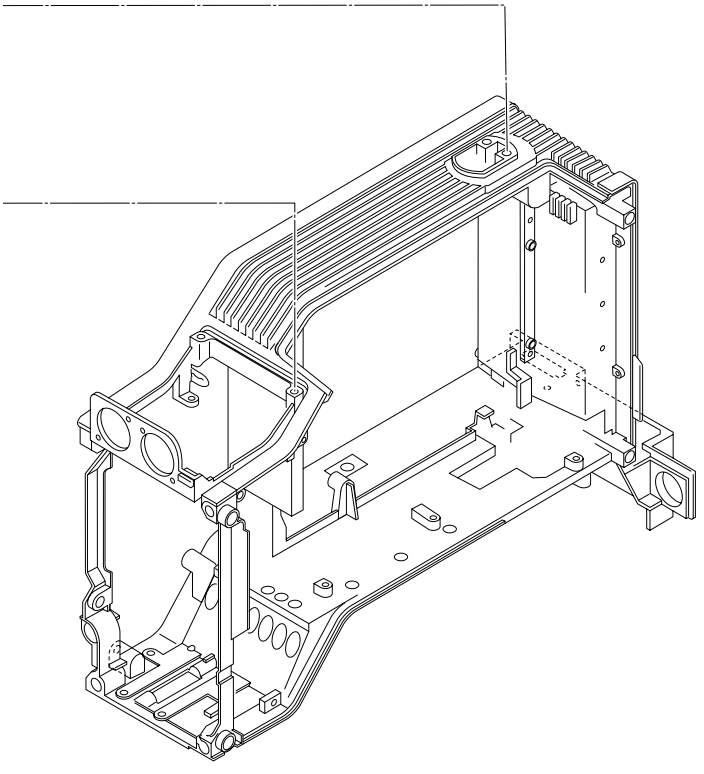

No.	Part No.	SP	Description
	*1,*2:For DSR-500WS/500WSP		
	*1:Serial No. 10001-12000(UC), 30001-32000(J), 40001-40850(CE)		
	*2:Serial No. 12001-(UC), 32001-(J), 40851-(CE)		
401	A-8279-119-F	o	HANDLE ASSEMBLY, SUB(WS) [for DSR-500WS/500WSP]
	A-8278-801-G	o	HANDLE ASSY, SUB [for DSR-570WS/570WSP]
402	1-673-950-11	o	PRINTED CIRCUIT BOARD, CN-1867
403	A-8322-171-A	o	MOUNTED CIRCUIT BOARD, LE-221
404	A-8322-166-A	o	MOUNTED CIRCUIT BOARD, SW-18
405	1-673-956-11	o	PRINTED CIRCUIT BOARD, CN-1874
406	X-3605-491-1	s	COVER ASSEMBLY, HANDLE(WS) [for DSR-500WS/500WSP]
	X-3604-541-1	s	COVER ASSY, HANDLE [for DSR-570WS/570WSP]
407	X-3744-307-1	s	SUSPENSION ASSEMBLY
408	1-542-296-23	o	MICROPHONE
409	1-673-947-11	o	PRINTED WIRING BOARD, CN-1866
410	3-179-882-01	o	SPACER, MICROPHONE
411	3-612-600-12	s	FIXING BASE, VF SHOE [for DSR-500WS/500WSP]
	3-612-600-01	s	FIXING BASE, VF SHOE [for DSR-570WS/570WSP]
412	3-612-624-12	s	COVER, HANDLE(2) [for DSR-500WS/500WSP]
	3-612-624-04	s	COVER, HANDLE(2) [for DSR-570WS/570WSP]
413	3-612-629-02	s	COVER, HANDLE(3)
414	3-612-632-02	s	COVER, SW(H)
415	3-612-635-02	o	FIXING KNOB, VF
416	3-612-664-11	s	COVER, CN(ANTON) [for DSR-500WS/500WSP]
	3-612-664-01	s	COVER, CN(ANTON) [for DSR-570WS/570WSP]
417	3-612-665-01	o	CUSHION(2)
418 *1	3-612-701-01	o	LABEL, FILTER(A)
*2	3-604-403-01	o	LABEL, FILTER(A)
419	3-612-822-01	s	SPRING, COMPRESSION
420	3-676-244-03	s	COVER, SWITCH
421	3-679-543-11	o	RING(D), LOCK
422	3-679-684-01	o	REST, ARM
423	3-686-197-01	o	ARM, SLIDE
424	3-686-261-03	s	SHOE3, SLIDE, VF
425	3-687-070-01	o	WASHER, SHOE
426	3-688-754-11	s	SPRING
427	3-688-755-11	s	SHOE, ACCESSORY
428	3-624-426-01	s	SCREEN, WIND
429	3-720-919-01	o	RUBBER, LOCK RING
430	3-846-067-21	o	SPACER (C)
431	3-849-405-00	s	COVER, EARPHONE JACK
432	3-625-924-01	s	ALOCK SCREW, +B2.6 NI
433	1-475-344-21	o	REMOTE COMMANDER (RM-LG1) [for DSR-500WS/500WSP]
434	9-980-573-01	o	HOLDER ASSEMBLY [for DSR-500WS/500WSP]
435	3-626-743-11	s	COVER, HANDLE (4) [for DSR-500WS/500WSP]
	3-626-743-01	s	COVER, HANDLE (4) [for DSR-570WS/570WSP]
436	3-608-925-01	o	LABEL, RM [VTR,MARK,CUE,NG] [for DSR-500WS/500WSP]
437	3-370-476-11	s	SCREW (NYLOCK +B2X5)
438	3-725-295-21	s	SCREW, (+)(B3)

Cassette Compartment/Boards

No.	Part No.	SP	Description
501	A-8277-832-C	o	MOUNTED CIRCUIT BOARD, CC-68
502	A-8277-852-A	o	MOUNTED CIRCUIT BOARD, RP-91
503	A-8277-853-A	o	MOUNTED CIRCUIT BOARD, HN-227
504	A-8322-140-B	o	MOUNTED CIRCUIT BOARD, SV-213
505	A-8315-150-L	s	CASSETTE COMPARTMENT ASSEMBLY
506	1-777-864-11	s	CABLE, FLEXIBLE FLAT(20-CORE)
507	3-729-013-21	s	SCREW(M1.4x2.5),WASHERHEAD(+P)

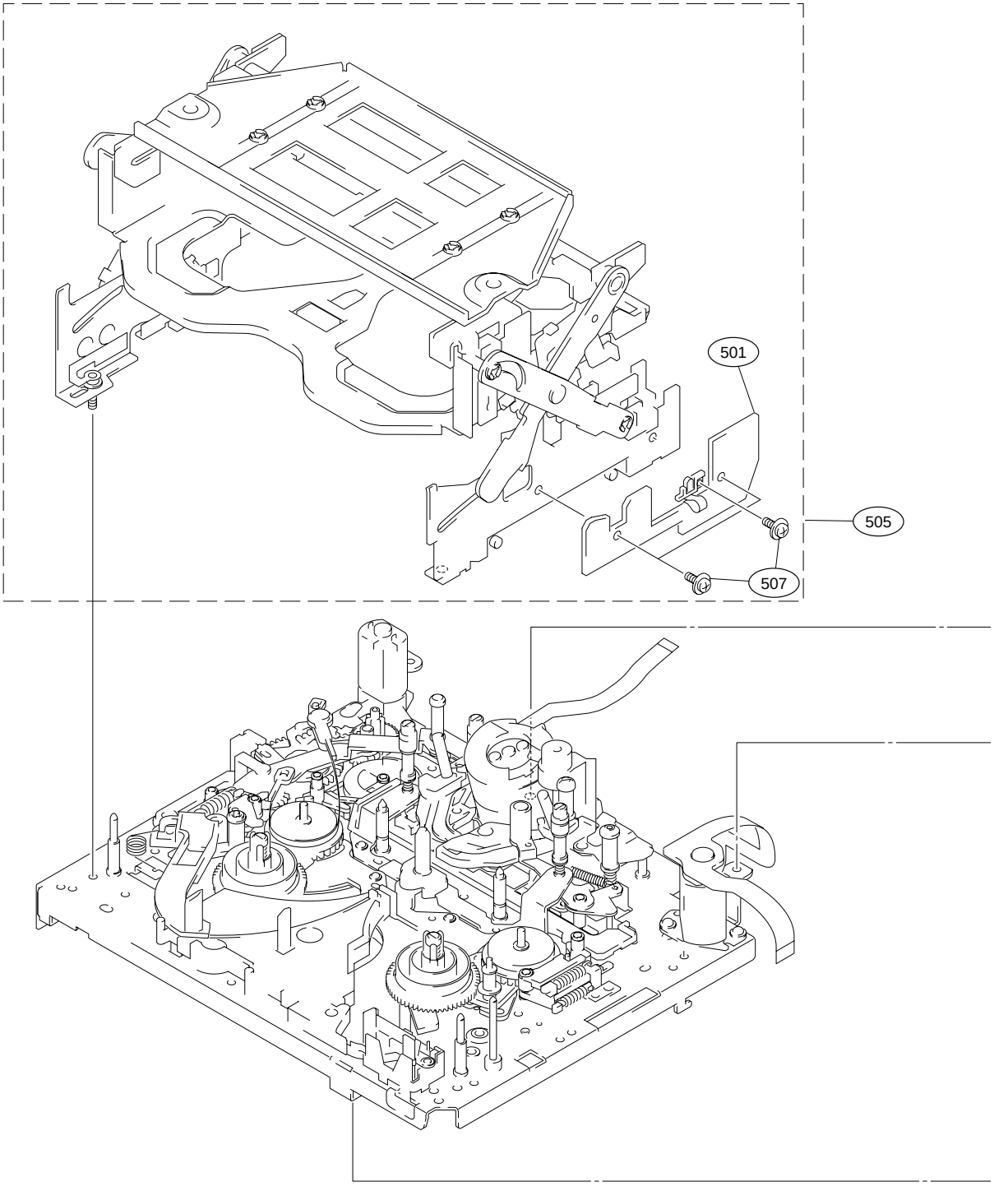

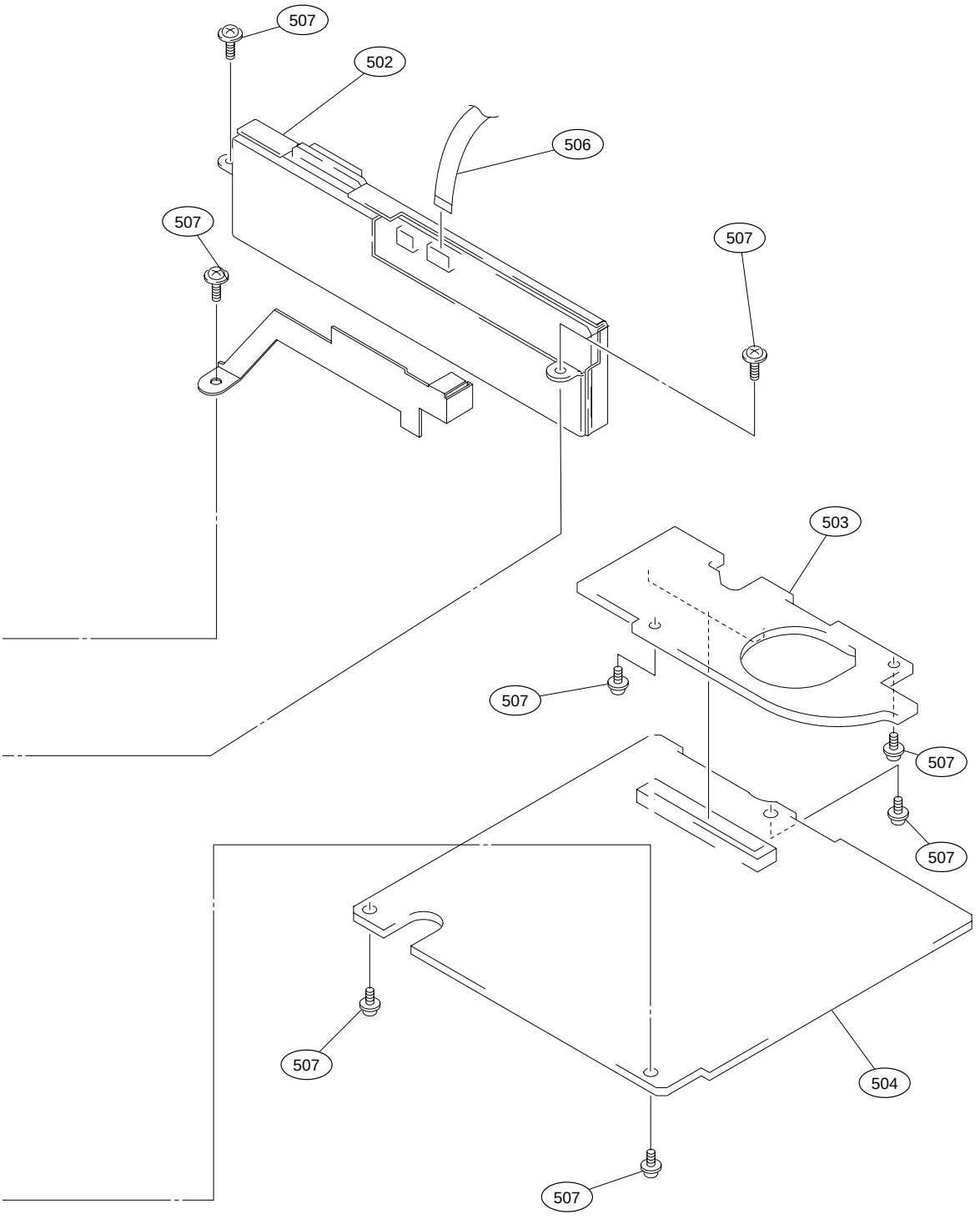
507
502
506
507
507
503
507
507
507
507
504
507

No.	Part No.	SP	Description
601	A-8278-429-F	s	ARM ASSEMBLY,TR
602	X-3678-777-2	s	BAND ASSEMBLY,TR
603	X-3678-788-4	s	ARM ASSEMBLY,PINCH
604	X-3678-791-2	o	ARM ASSEMBLY,TG7
605	X-3678-872-1	o	BRACKET ASSEMBLY,SENSOR
606	X-3678-880-1	o	TG#1/#8 BASE ASSEMBLY
607	X-3678-908-1	o	WEIGHT ASSEMBLY,COUNTER
608	3-548-757-00	s	SPRING, TENSION
609	3-604-702-02	s	ROLLER,TG18
610	3-604-703-01	s	LOWER FLANGE,TG1/8
611	3-604-704-01	s	UPPER FLANGE,TG18
612	3-608-304-02	s	SLEEVE,TG18
613	3-973-948-01	s	UPPER FLANGE,TG3
614	3-966-099-11	s	ROLLER,TG13
615	3-604-796-01	o	SPRING(PINCH),TORSION
616	3-606-146-01	o	SPRING(TG7),TORSION
617	3-604-832-01	s	RETAINER, CAP
618	3-604-833-01	s	CAP
619	3-604-861-02	o	HOLDER,PRISM
620	3-604-953-01	s	DETENT,TG7

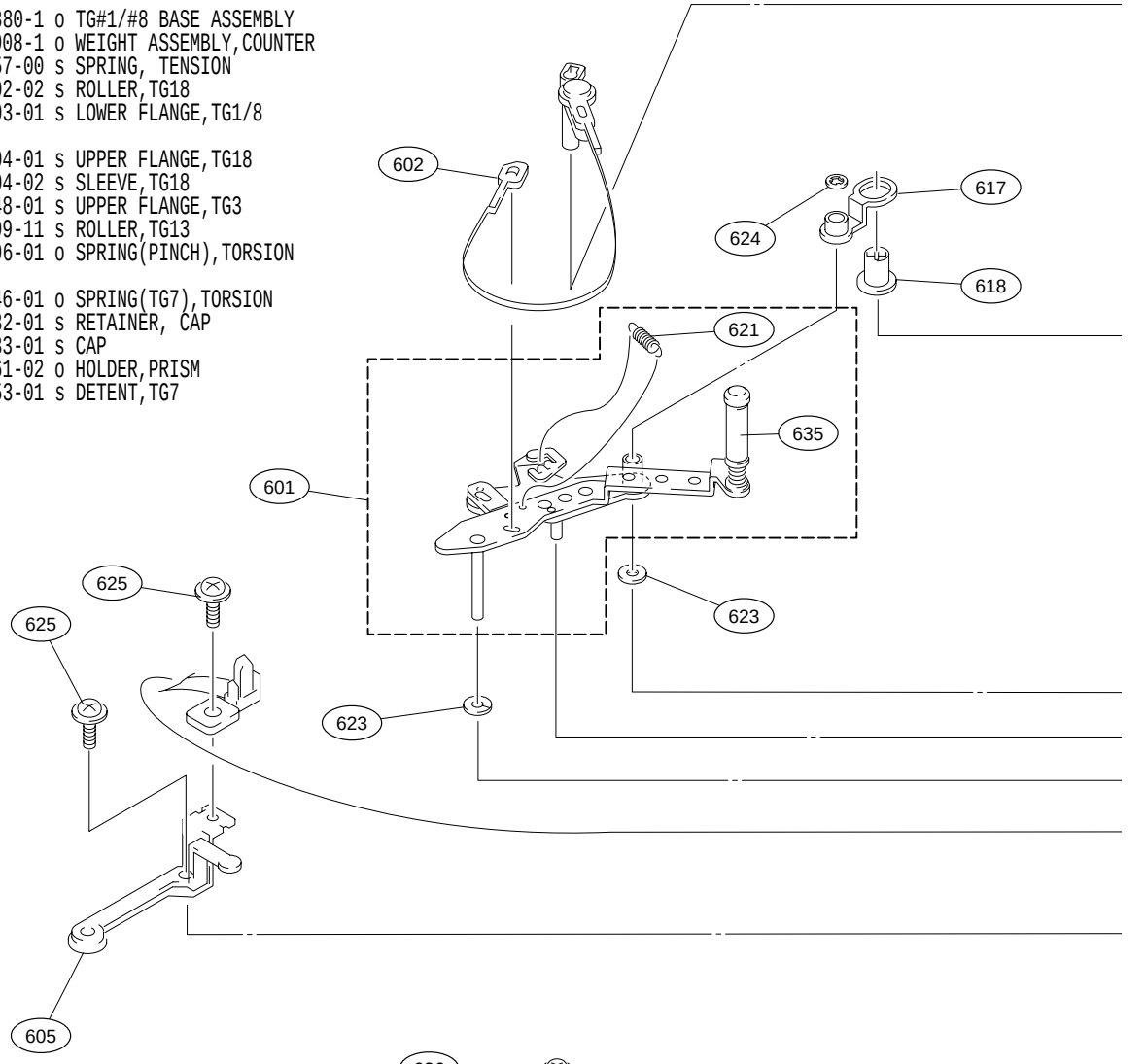

621	3-607-208-01	s	(TR)9,EXTENSION
622	3-605-319-01	o	PRISM
623	3-701-436-11	s	WASHER, 1.6 POLYETHYLENE
624	3-726-829-01	s	WASHER, STOPPER
625	3-729-013-21	s	SCREW(M1.4X2.5),WASHERHEAD(+P)
626	3-729-013-61	s	SCREW(M1.4X4.5),WASHERHEAD(+P)
627	3-748-777-02	s	TG7
628	3-940-891-01	s	SPRING, COMPRESSION
629	3-964-614-01	s	FLANGE, TG7 LOWER
630	3-966-100-11	s	SLEEVE, TG13
631	3-623-839-01	s	NUT, TG13
632	3-966-106-01	s	FLANGE, TG3 LOWER
633	3-966-107-01	s	SPRING, COMPRESSION
634	3-966-194-01	s	FLANGE, TG7 UPPER
635	3-604-718-01	o	ROLLER, TG2

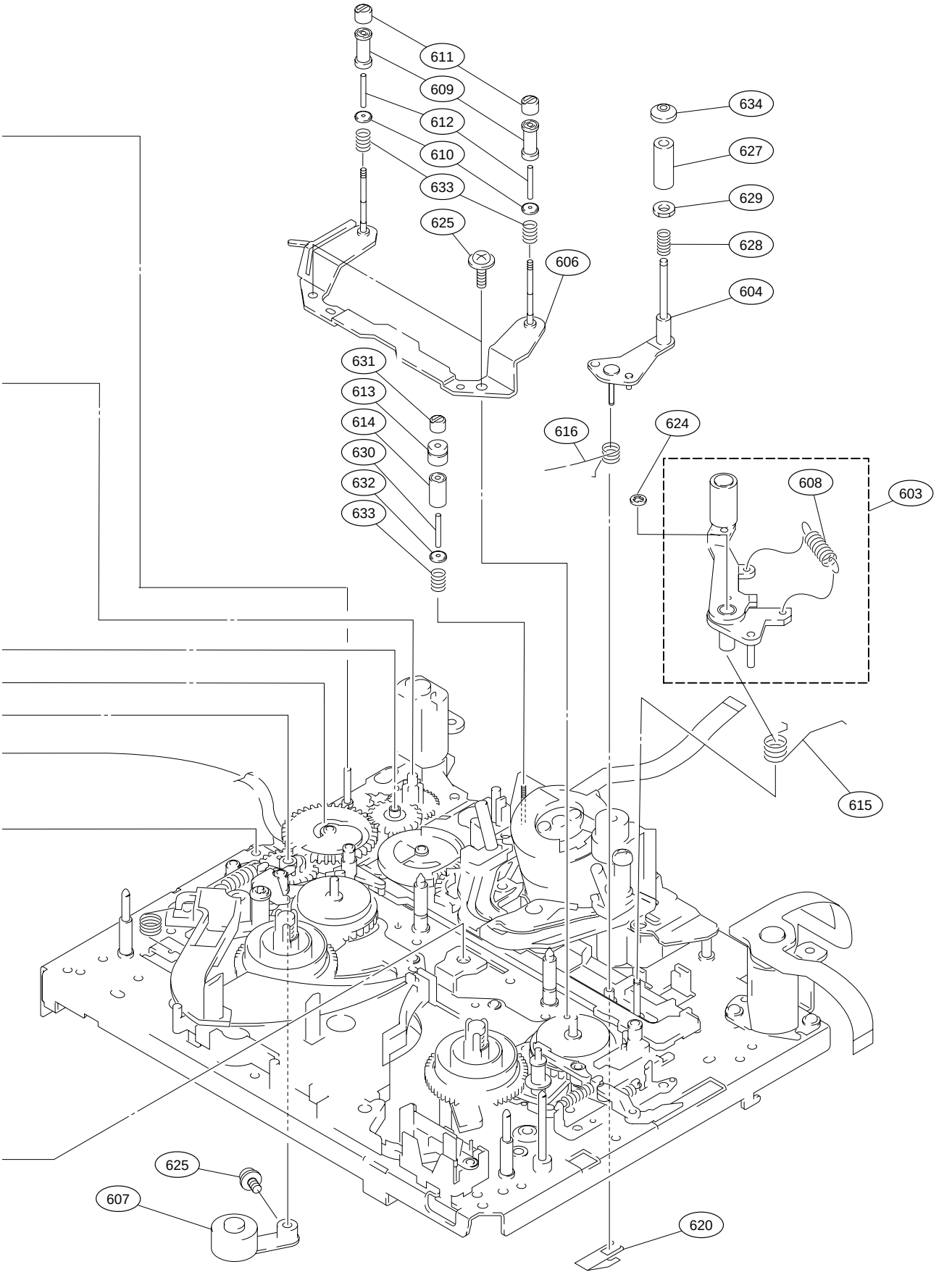
611
609
612
610
633
625
606
634
627
629
628
604
631
613
614
630
632
633
616
624
608
603
615
625
607
620

No.	Part No.	SP	Description
701	A-8278-432-C	o	ARM ASSEMBLY(T),HARD BRAKE
702	A-8278-433-A	o	ARM(S)ASSEMBLY,HARD BRAKE
703	A-8311-497-C	o	REEL(LARGE)ASSEMBLY
704	X-3678-869-1	s	ARM(T)ASSEMBLY,SOFT BRAKE
705	X-3678-870-1	s	SOFT BRAKE ASSEMBLY,TL
706	X-3678-881-3	o	S PLATE ASSEMBLY,REEL
707	X-3678-882-3	o	PLATE ASSEMBLY,T REEL
708	X-3608-225-1	o	GEAR ASSEMBLY(T),SUB REEL
709	X-3608-226-1	o	GEAR ASSEMBLY(S),SUB REEL
710	3-349-867-01	s	SPRING, TENSION

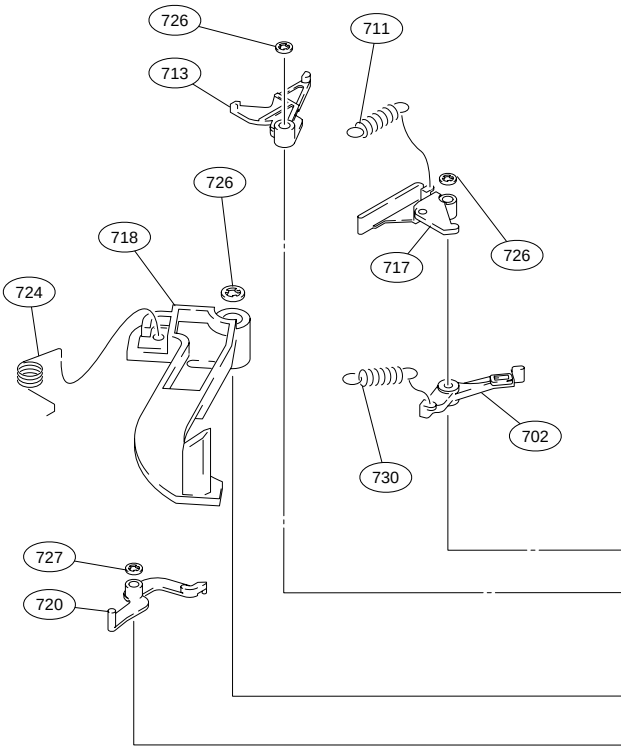

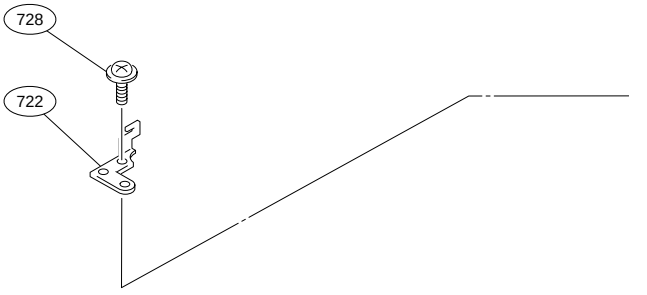

711	3-446-154-99	s	SPRING, TENSION
712	3-601-330-99	o	HOOK(T),SPRING
713	3-603-966-02	o	ARM,LOCK RELEASE
714	3-604-851-01	o	ARM,SH RELEASE
715	3-604-855-01	o	LEVER,TL,RELEASE
716	3-604-860-02	o	RELEASE ARM,T BRAKE
717	3-605-314-01	s	ARM(S),SOFT BRAKE
718	3-605-316-02	o	ROCK ARM,REEL
719	3-605-317-01	o	ROCK DRIVING ARM,REEL
720	3-605-318-01	o	ARM,SS RELEASE
721	3-605-320-02	o	STOPPER,REEL T
722	3-605-329-02	o	HOOK(S),SPRING
723	3-605-332-01	o	RETAINER,REEL PLATE
724	3-605-333-01	o	PRESS SPRING,REEL LOCK
725	3-606-366-01	o	LEVER,BRAKE,SOFT
726	3-669-465-01	s	WASHER(1.5), STOPPER
727	3-726-829-01	s	WASHER, STOPPER
728	3-729-013-21	s	SCREW(M1.4X2.5),WASHERHEAD(+P)
729	3-908-649-01	s	SPRING(OPEN)
730	3-913-922-01	s	SPRING(T RELEASE), TENSION
731	4-930-450-01	s	SPRING TENSION
732	3-331-685-01	s	SPRING TENSION

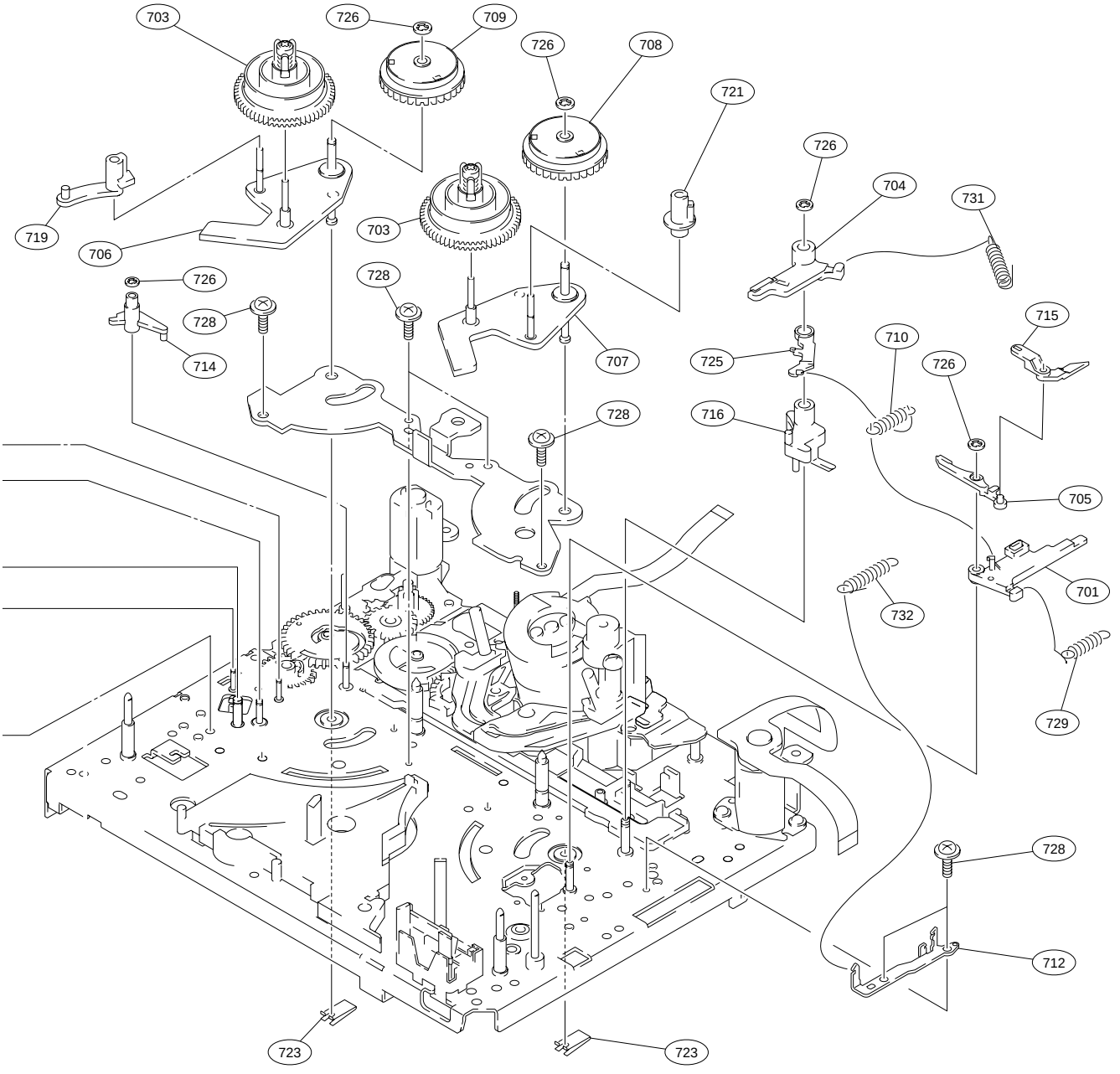
703
726
709
726
708
721
726
704
731
719
706
703
726
728
728
714
707
715
710
725
726
728
716
705
701
732
729
728
712
723
723

No.	Part No.	SP	Description
801	A-7026-009-D	s	SCREW ASSEMBLY, DRUM FITTING
802	A-4900-064-A	s	DRUM ASSY, DEH-03A/J-RP [for DSR-570WS/570WSP]
	A-7044-005-A	s	DRUM ASSEMBLY, DEH-03A-R [for DSR-500WS/500WSP]
803	A-8311-086-A	s	MOTOR BLOCK ASSEMBLY, LD
804	A-8311-088-A	s	MOTOR ASSEMBLY, SHIFT
805	A-8311-505-B	s	C ASSEMBLY
806	3-604-834-03	o	HOLLDER,TC
807	X-3678-884-2	s	IDLER GEAR ASSEMBLY
808	X-3945-435-3	s	SHAFT(12)ASSEMBLY, WORM
809	1-698-870-12	s	MOTOR, DC(REEL)
810	3-315-414-31	s	WASHER
811	3-604-708-01	o	ARM(B),HC
812	3-604-797-01	o	SPRING(HC),TORSION
813	3-604-864-02	o	COVER,REEL ROCK
814	3-669-465-01	s	WASHER(1.5), STOPPER
815	3-703-816-42	s	SCREW(M1.4X2.5), SPECIAL HEAD
816	3-729-013-21	s	SCREW(M1.4X2.5),WASHERHEAD(+P)
817	8-835-530-01	s	MOTOR, DC SCD12A/J-N
818	1-801-756-11	s	SENSOR, DEW CONDENSATION

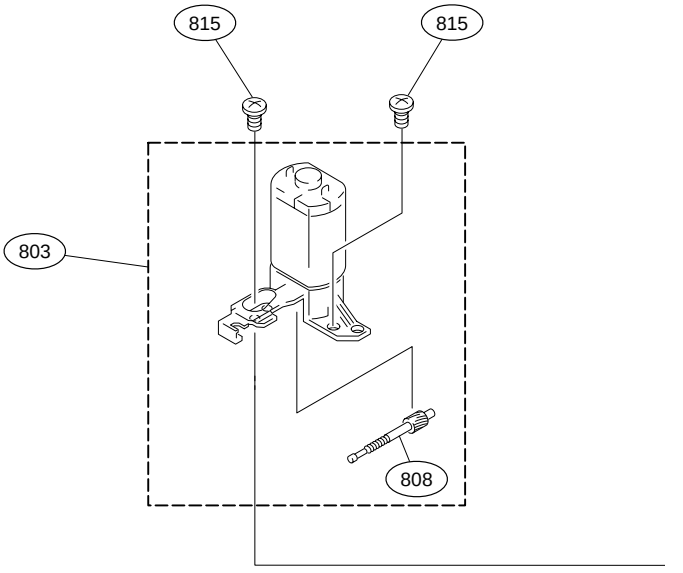

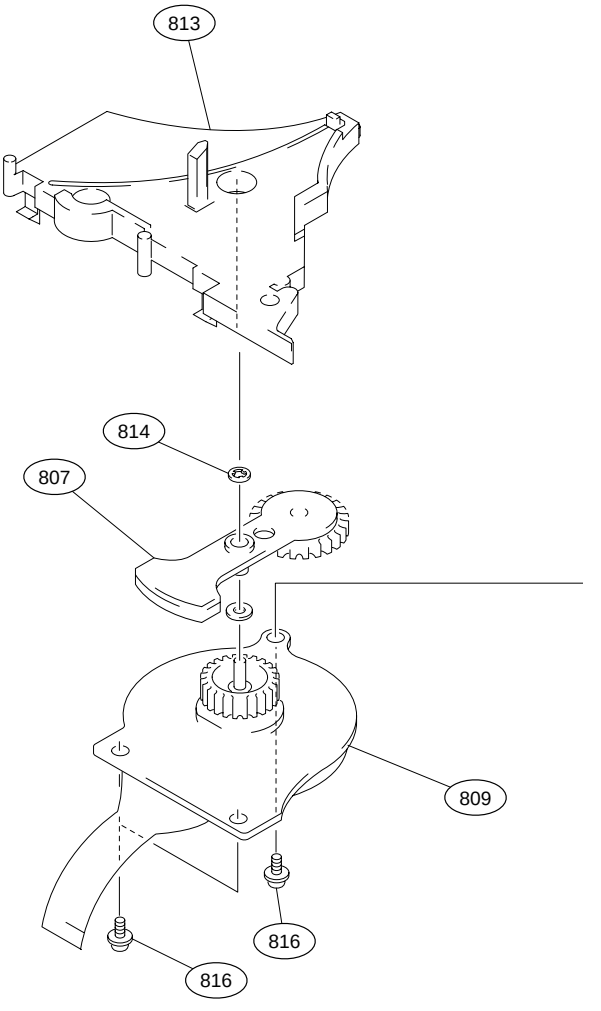

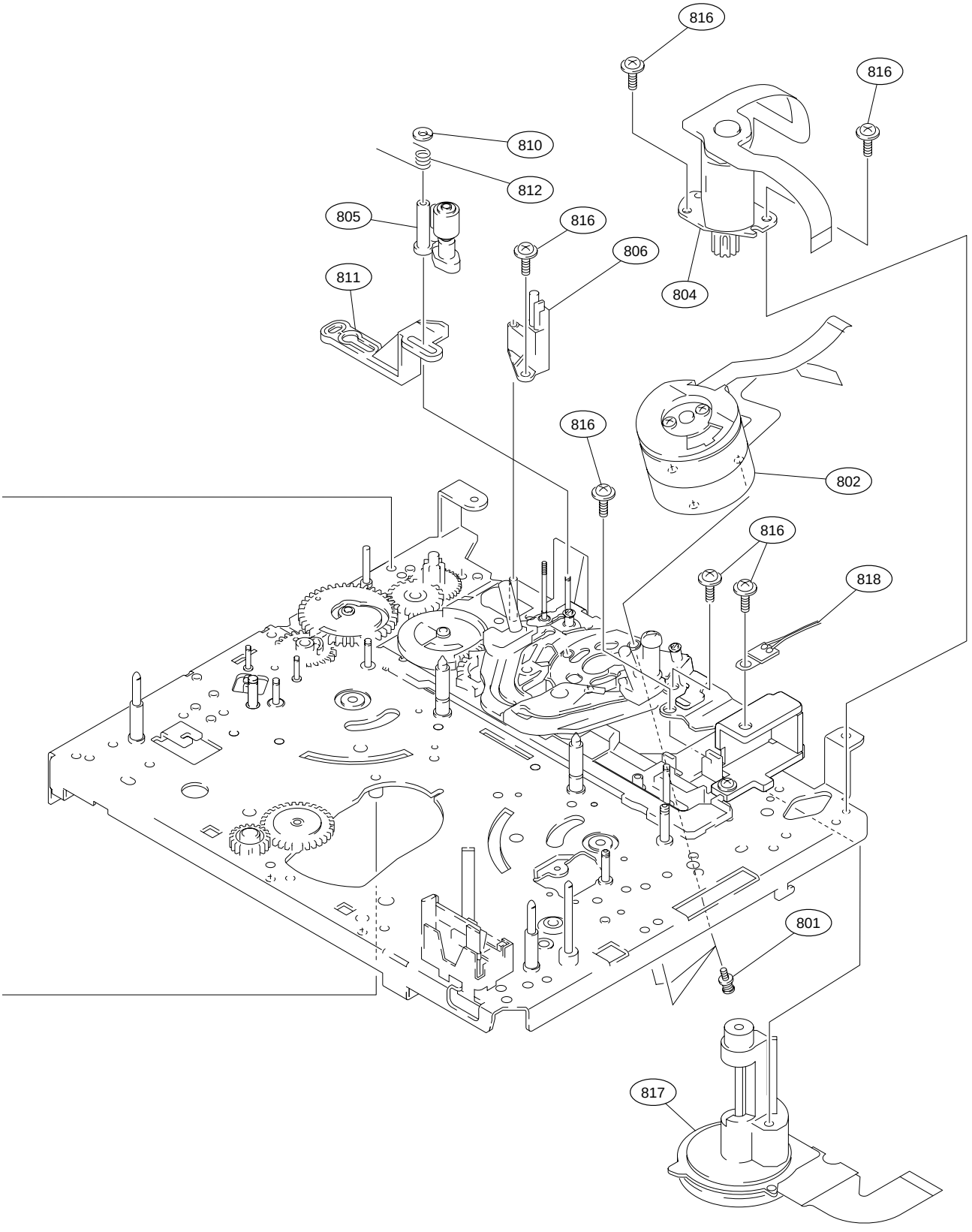
816
816
810
812
805
816
806
811
804
816
802
816
818
801
817

Gear (1)

No.	Part No.	SP	Description
901	A-8319-580-A	s	ASSEMBLY, GL(T)
902	A-8277-830-B	o	MOUNTED CIRCIT BOARD, SE-295
903	A-8311-397-C	s	ASSEMBLY, GL(S)
904	X-3678-776-4	o	ARM ASSEMBLY,SLIDER
905	X-3608-224-1	o	GEAR ASSEMBLY,MODE
906	3-388-596-01	s	SPRING, COMPRESSION
907	3-603-969-01	o	GEAR,C
908	3-604-707-01	o	ARM(A),HC
909	3-604-713-01	o	GEAR,THREADING
910	X-3605-670-2	o	GEAR ASSEMBLY,CAM
911	3-604-825-01	o	GEAR,NO.1
912	3-604-829-01	o	SLIDER,MODE
913	3-604-856-01	o	GEAR,D
914	3-604-858-01	o	CAM GEAR,RELEASE
915	X-3678-912-1	o	GEAR ASSEMBLY,HC
916	3-669-465-01	s	WASHER(1.5), STOPPER
917	3-703-816-42	s	SCREW(M1.4X2.5), SPECIAL HEAD
918	3-726-829-01	s	WASHER, STOPPER
919	3-729-013-21	s	SCREW(M1.4X2.5),WASHERHEAD(+P)
920	X-3604-927-1	s	TG5 ASSEMBLY 2

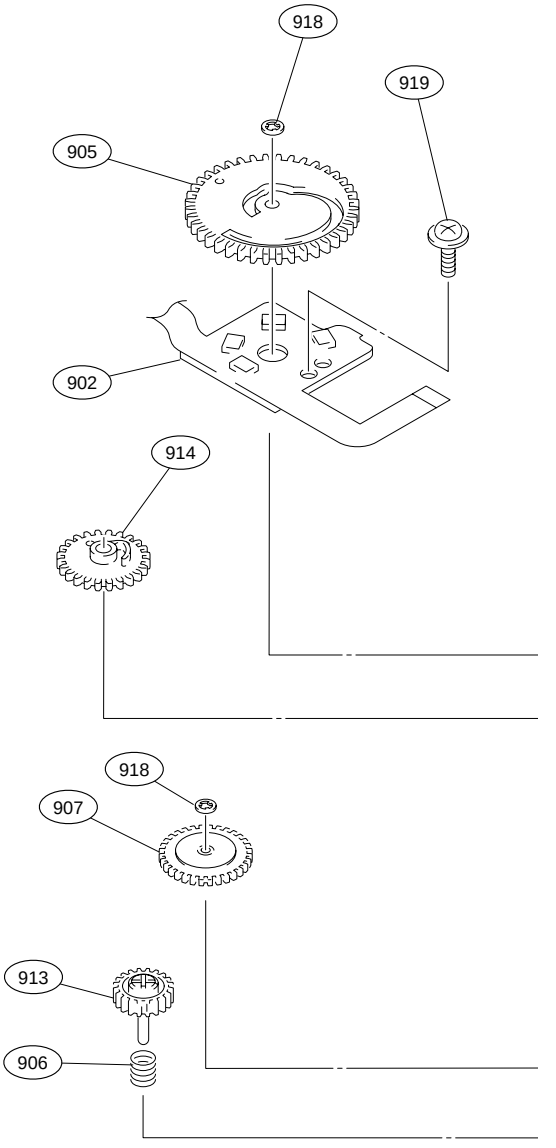

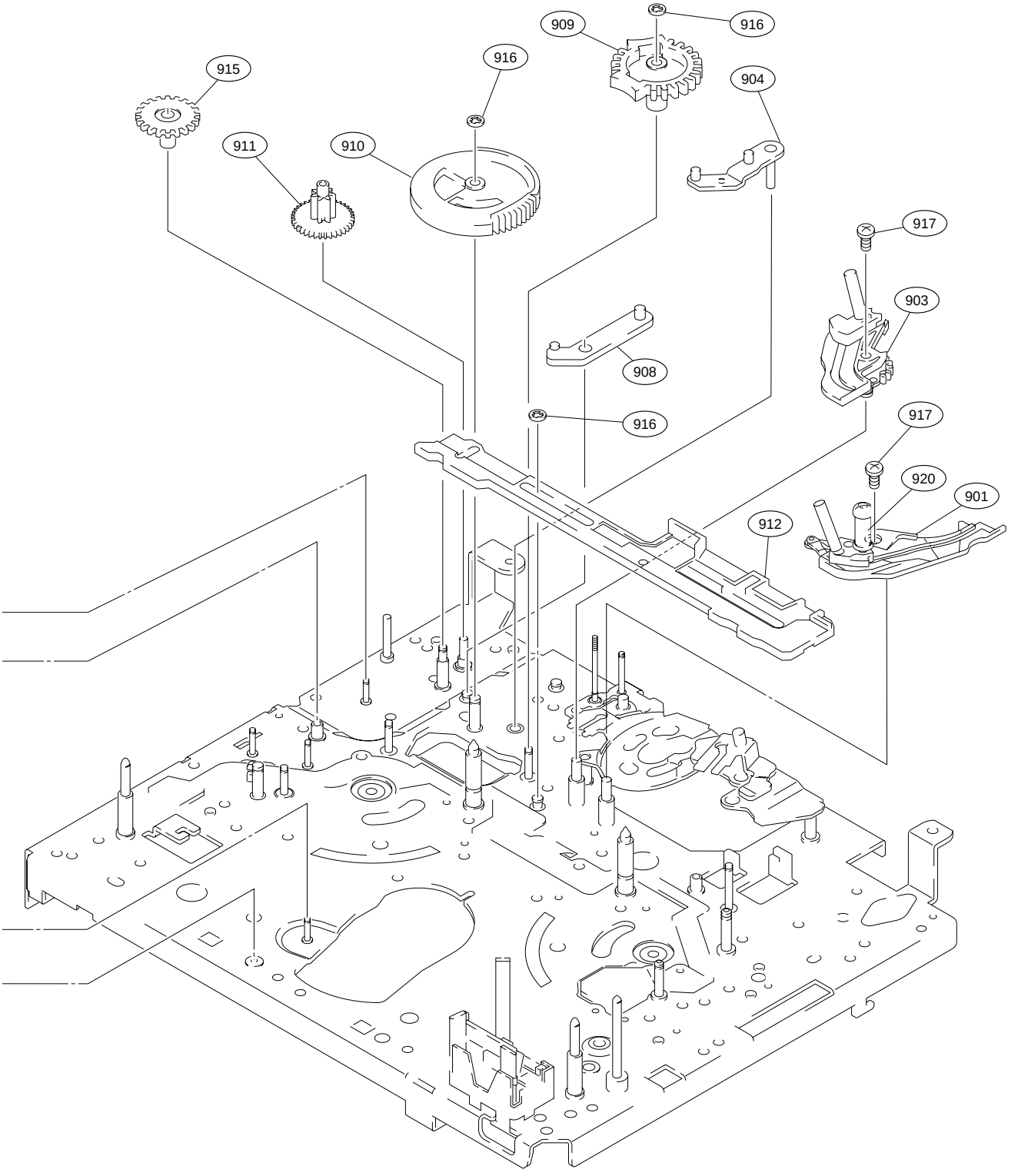
909
916
915
916
904
911
910
917
903
908
916
917
920
901
912

Gear (2)

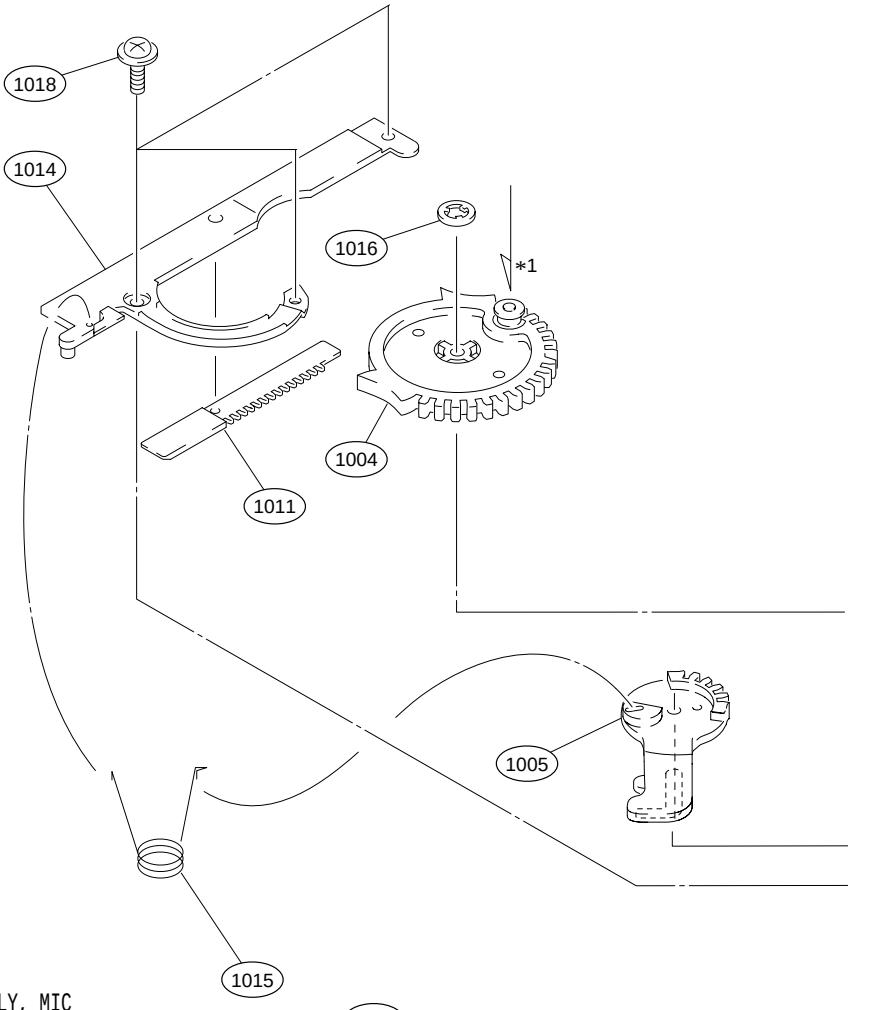

No.	Part No.	SP	Description
1001	A-8311-396-C	s	HOLDER(C)BLOCK ASSEMBLY, MIC
1002	X-3678-878-1	o	REEL MOVE ARM ASSEMBLY
1003	X-3678-879-1	o	REEL PLATE LINK ASSEMBLY
1004	X-3678-888-2	o	GEAR ASSEMBLY,DRIVE B
1005	3-603-962-01	o	LEVER,MIC
1006	3-603-968-01	o	GEAR,B
1007	3-603-969-01	o	GEAR,C
1008	3-603-970-01	o	GEAR,A
1009	3-604-826-01	o	SHAFT,NO.1 GEAR
1010	3-604-839-01	o	DETENT,#1
1011	3-604-849-01	o	RACK
1012	3-604-853-01	o	GEAR,E
1013	3-605-312-01	o	DRIVING GEAR A,REEL
1014	3-605-313-02	o	CASE,RACK
1015	3-605-331-01	o	SPRING,COMPRESSION,MIC
1016	3-669-465-01	s	WASHER(1.5), STOPPER
1017	3-726-829-01	s	WASHER, STOPPER
1018	3-729-013-21	s	SCREW(M1.4X2.5),WASHERHEAD(+P)
1019	3-730-141-01	s	SCREW(PSW2X4)
1020	3-729-078-11	s	SPRING,TENSION

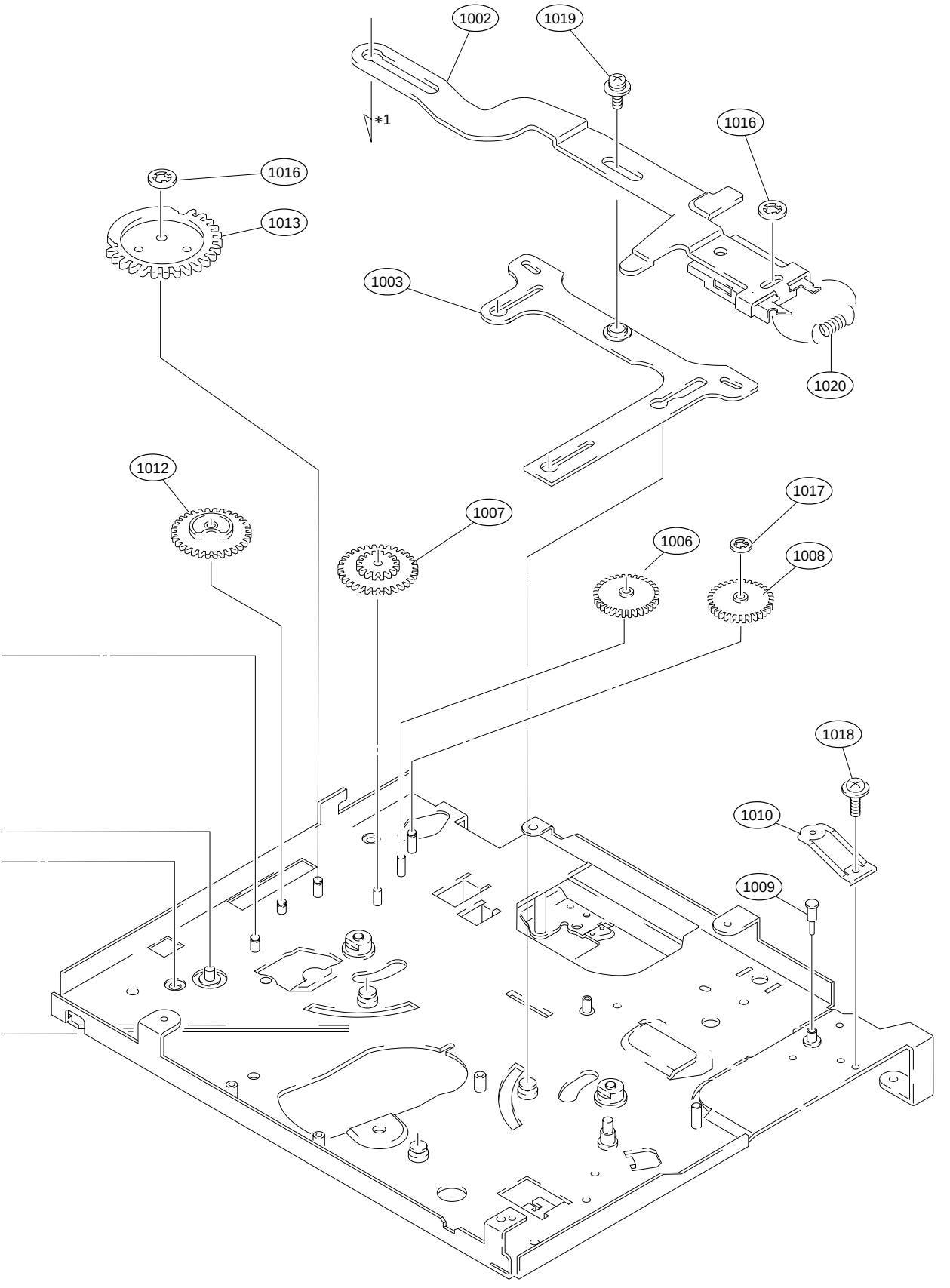
1002
1019
*1
1016
1016
1013
1003
1020
1012
1007
1017
1006
1008
1018
1010
1009

1-3. Electrical Parts List

Index

Board	Page	Remarks
AA-104	1-25	
AT-127	1-26	DSR-500WS/500WSP
AT-150B	1-30	DSR-570WS/570WSP
CC-68	1-33	
CN-1519	1-33	DSR-500WS/500WSP
CN-1811	1-34	
CN-1823	1-34	
CN-1864	1-34	
CN-1865	1-34	
CN-1866	1-34	
CN-1867	1-34	
CN-1873	1-35	
CN-1874	1-35	
CN-2277	1-35	DSR-570WS/570WSP
CP-315	1-35	DSR-500WS/500WSP
CP-373	1-37	DSR-570WS/570WSP
DPR-141	1-39	DSR-500WS/500WSP (suffix 13-)
	1-49	DSR-500WS/500WSP (suffix 11)
DPR-141B	1-59	DSR-570WS/570WSP
DV-21	1-69	DSR-500WS/500WSP
DV-21C	1-69	DSR-570WS/570WSP
DU-36	1-70	
ES-26/26P	1-70	
FP-118	1-82	DSR-500WS/500WSP
FP-118A	1-89	DSR-570WS/570WSP
FP-99	1-96	
GCN-16	1-96	
HN-227	1-97	
KY-405	1-97	
LE-221	1-97	
MB-833	1-97	
MT-114	1-97	
PA-219A	1-98	DSR-500WS/500WSP
PA-220A	1-99	DSR-500WS/500WSP
PA-221A	1-101	DSR-500WS/500WSP
PA-254B	1-102	
PA-255B	1-104	
PA-256B	1-105	
PS-570	1-107	
PSW-71	1-107	
RP-91	1-108	
SE-295	1-111	
SE-297	1-111	
SE-511	1-111	
SV-213	1-111	
SW-18	1-116	
SW-19	1-116	
SW-929	1-116	
TG-204	1-117	
VA-190	1-120	
VE-44	1-126	
FRAME	1-127	

AA-104 BOARD

Ref. No. or Q'ty	Part No.	SP	Description
*1,*2,*3:For DSR-500WS/500WSP			
*1:Serial No. 10001-12000(UC), 30001-32000(J), 40001-40735(CE)			
*2:Serial No. 12001-(UC), 32001-(J), 40736-42000(CE)			
*3:Serial No. 12001-(UC), 32001-(J), 42001-(CE)			
1pc	A-8322-165-B	o	MOUNTED CIRCUIT BOARD, AA-104
C501	1-162-970-11	s	CERAMIC, CHIP 0.01uF 10% 25V
C502	1-163-021-91	s	CERAMIC 0.01uF 10% 50V
C503	1-163-021-91	s	CERAMIC 0.01uF 10% 50V
C504	1-163-021-91	s	CERAMIC 0.01uF 10% 50V
C505	1-162-970-11	s	CERAMIC, CHIP 0.01uF 10% 25V
C506	1-104-851-11	s	TANTALUM, CHIP 10uF 20% 10V
C507	1-104-551-11	s	FILM, CHIP 0.01uF 5% 16V
C508	1-104-551-11	s	FILM, CHIP 0.01uF 5% 16V
C509	1-164-156-11	s	CERAMIC, CHIP 0.1uF 25V
C512	1-163-038-00	s	CERAMIC, CHIP 0.1uF 25V
C516	1-104-823-11	s	TANTALUM, CHIP 47uF 20% 16V
C517	1-113-500-11	s	TANTALUM 100uF 20% 10V
C518	1-107-561-11	s	FILM 0.01uF 5% 50V
C519	1-107-561-11	s	FILM 0.01uF 5% 50V
C520	1-163-133-00	s	CERAMIC, CHIP 470PF 5% 50V
C521	1-163-133-00	s	CERAMIC, CHIP 470PF 5% 50V
C522	1-126-219-11	s	ELECT 3.3uF 20% 63V
C523	1-163-021-91	s	CERAMIC 0.01uF 10% 50V
C524	1-126-219-11	s	ELECT 3.3uF 20% 63V
C525	1-126-219-11	s	ELECT 3.3uF 20% 63V
C526	1-163-021-91	s	CERAMIC 0.01uF 10% 50V
C527	1-163-021-91	s	CERAMIC 0.01uF 10% 50V
C528	1-163-243-11	s	CERAMIC, CHIP 47PF 5% 50V
C529	1-163-243-11	s	CERAMIC, CHIP 47PF 5% 50V
C530	1-104-563-11	s	FILM, CHIP 0.1uF 5% 16V
C531	1-104-563-11	s	FILM, CHIP 0.1uF 5% 16V
C532	1-163-038-00	s	CERAMIC, CHIP 0.1uF 25V
C533	1-163-038-00	s	CERAMIC, CHIP 0.1uF 25V
C534	1-104-563-11	s	FILM, CHIP 0.1uF 5% 16V
C535	1-104-563-11	s	FILM, CHIP 0.1uF 5% 16V
C536	1-164-161-11	s	CERAMIC, CHIP 0.0022uF 10% 50V
C537	1-164-161-11	s	CERAMIC, CHIP 0.0022uF 10% 50V
C538	1-164-161-11	s	CERAMIC, CHIP 0.0022uF 10% 50V
C540	1-164-315-11	s	CERAMIC, CHIP 470PF 5% 50V
C543	1-163-038-00	s	CERAMIC, CHIP 0.1uF 25V
C545	1-163-021-91	s	CERAMIC 0.01uF 10% 50V
C546	1-162-970-11	s	CERAMIC, CHIP 0.01uF 10% 25V
C547	1-163-021-91	s	CERAMIC 0.01uF 10% 50V
C548 *3	1-163-021-91	s	CERAMIC 0.01uF 10% 50V
CN501	1-691-550-11	s	PIN, CONNECTOR (1.5MM)(SMD) 3P
CN502	1-565-249-11	o	SOCKET, CONNECTOR
CN503	1-764-394-11	s	CONNECTOR (XLR TYPE) 3P
CN504	1-778-652-11	o	CONNECTOR, FFC (ZIF) 50P
CN505	1-764-177-11	o	PIN, CONNECTOR (SMD)(1.5MM) 7P
CN506	1-573-806-21	s	PIN, CONNECTOR (1.5MM) (SMD)6P
D501	8-719-800-76	s	DIODE 1SS226
D502	8-719-800-76	s	DIODE 1SS226
D504	8-719-027-95	s	DIODE HSM88WK
FB501	1-543-775-11	s	FERRITE 0uH
FB502	1-543-775-11	s	FERRITE 0uH
FB503	1-543-775-11	s	FERRITE 0uH
FB504	1-414-445-11	s	FERRITE 0uH
FB505	1-414-445-11	s	FERRITE 0uH

(AA-104 BOARD)

Ref. No. or Q'ty	Part No.	SP	Description
FB506	1-414-445-11	s	FERRITE 0uH
FB507	1-543-775-11	s	FERRITE 0uH
FB508	1-543-775-11	s	FERRITE 0uH
FB509	1-543-775-11	s	FERRITE 0uH
FB510	1-414-445-11	s	FERRITE 0uH
FB511	1-543-775-11	s	FERRITE 0uH
FB512	1-543-775-11	s	FERRITE 0uH
FB513	1-543-775-11	s	FERRITE 0uH
FB514	1-543-775-11	s	FERRITE 0uH
FB515	1-543-775-11	s	FERRITE 0uH
FB516	1-543-775-11	s	FERRITE 0uH
FB517	1-543-775-11	s	FERRITE 0uH
FB518	1-543-775-11	s	FERRITE 0uH
FB519	1-543-775-11	s	FERRITE 0uH
FL501	1-239-077-11	s	FILTER, EMI
FL502	1-239-896-12	s	FILTER, EMI (SMD)
IC501	8-759-082-57	s	IC TC7W04FU
IC503	8-759-659-71	s	IC SN74HC165APWR
IC505	8-759-268-33	s	IC SN74HC595ADB(R)
IC506	8-759-058-58	s	IC TC7S04FU(TE85R)
IC507	8-759-669-45	s	IC TL062CPWR-12
IC508	8-759-111-56	s	IC UPC4572G2
IC509	8-759-422-21	s	IC NJM4580V(TE2)
IC510	8-759-530-27	s	IC TC4052BFT(EL,N)
IC512	8-759-669-45	s	IC TL062CPWR-12
IC513	8-759-082-61	s	IC TC4W53FU
Q503	8-729-905-35	s	TRANSISTOR 2SC4081-R
Q504	8-729-026-53	s	TRANSISTOR 2SA1576A-T106-QR
Q505	8-729-905-35	s	TRANSISTOR 2SC4081-R
Q506	8-729-905-35	s	TRANSISTOR 2SC4081-R
Q507	8-729-905-35	s	TRANSISTOR 2SC4081-R
Q508 *1	8-729-905-35	s	TRANSISTOR 2SC4081-R
R501	1-216-097-00	s	METAL, CHIP 100K 5% 1/10W
R502	1-216-097-00	s	METAL, CHIP 100K 5% 1/10W
R503	1-216-097-00	s	METAL, CHIP 100K 5% 1/10W
R504 *1	1-216-097-00	s	METAL, CHIP 100K 5% 1/10W
R512	1-216-001-00	s	METAL, CHIP 10 5% 1/10W
R513	1-216-843-11	s	METAL, CHIP 68K 5% 1/16W
R514	1-216-101-00	s	METAL, CHIP 150K 5% 1/10W
R515	1-216-051-00	s	METAL, CHIP 1.2K 5% 1/10W
R516	1-216-105-00	s	METAL, CHIP 220K 5% 1/10W
R517	1-216-655-11	s	METAL, CHIP 1.5K 0.50% 1/10W
R518	1-216-655-11	s	METAL, CHIP 1.5K 0.50% 1/10W
R524	1-216-001-00	s	METAL, CHIP 10 5% 1/10W
R525	1-216-065-00	s	METAL, CHIP 4.7K 5% 1/10W
R526	1-216-065-00	s	METAL, CHIP 4.7K 5% 1/10W
R527	1-216-295-11	s	CONDUCTOR, CHIP 0
R528	1-216-295-11	s	CONDUCTOR, CHIP 0
R529	1-216-069-00	s	METAL, CHIP 6.8K 5% 1/10W
R530	1-216-069-00	s	METAL, CHIP 6.8K 5% 1/10W
R531	1-216-081-00	s	METAL, CHIP 22K 5% 1/10W
R533	1-216-073-00	s	METAL, CHIP 10K 5% 1/10W
R535	1-216-073-00	s	METAL, CHIP 10K 5% 1/10W
R536	1-208-801-11	s	METAL, CHIP 6.2K 0.50% 1/10W
R537	1-208-830-11	s	METAL, CHIP 100K 0.50% 1/10W
R538	1-208-830-11	s	METAL, CHIP 100K 0.50% 1/10W
R539	1-208-796-11	s	METAL, CHIP 3.9K 0.50% 1/10W

(AA-104 BOARD)

Ref. No. or Q'ty	Part No.	SP	Description
R541	1-208-807-11	s	METAL, CHIP 11K 0.50% 1/10W
R542	1-208-796-11	s	METAL, CHIP 3.9K 0.50% 1/10W
R544	1-208-807-11	s	METAL, CHIP 11K 0.50% 1/10W
R547	1-216-051-00	s	METAL, CHIP 1.2K 5% 1/10W
R548	1-216-051-00	s	METAL, CHIP 1.2K 5% 1/10W
R549	1-216-001-00	s	METAL, CHIP 10 5% 1/10W
R550	1-216-295-11	s	CONDUCTOR, CHIP 0
R551	1-216-001-00	s	METAL, CHIP 10 5% 1/10W
R552	1-216-001-00	s	METAL, CHIP 10 5% 1/10W
R553	1-216-864-11	s	METAL, CHIP 0 5% 1/16W
R554	1-216-033-00	s	METAL, CHIP 220 5% 1/10W
R555	1-216-033-00	s	METAL, CHIP 220 5% 1/10W
R556	1-216-033-00	s	METAL, CHIP 220 5% 1/10W
R557	1-216-797-11	s	METAL, CHIP 10 5% 1/16W
R558	1-216-797-11	s	METAL, CHIP 10 5% 1/16W
R559	1-216-797-11	s	METAL, CHIP 10 5% 1/16W
R560	1-216-797-11	s	METAL, CHIP 10 5% 1/16W
R561	1-216-813-11	s	METAL, CHIP 220 5% 1/16W
R562	1-216-025-11	s	METAL, CHIP 100 5% 1/10W
R563	1-216-025-11	s	METAL, CHIP 100 5% 1/10W
R564	1-216-061-00	s	METAL, CHIP 3.3K 5% 1/10W
R565	1-216-025-11	s	METAL, CHIP 100 5% 1/10W
R566	1-216-061-00	s	METAL, CHIP 3.3K 5% 1/10W
R572	1-216-849-11	s	METAL, CHIP 220K 5% 1/16W
R573	1-216-849-11	s	METAL, CHIP 220K 5% 1/16W
R582 *2	1-216-125-00	s	METAL, CHIP 1.5M 5% 1/10W
R583	1-216-817-11	s	METAL, CHIP 470 5% 1/16W
R584	1-216-817-11	s	METAL, CHIP 470 5% 1/16W
R585	1-216-833-91	s	METAL, CHIP 10K 5% 1/16W
R586	1-216-841-11	s	METAL, CHIP 47K 5% 1/16W
R587	1-216-065-00	s	METAL, CHIP 4.7K 5% 1/10W
R589	1-216-125-00	s	METAL, CHIP 1.5M 5% 1/10W
R590	1-216-089-91	s	METAL, CHIP 47k 5% 1/10W
R591	1-216-833-91	s	METAL, CHIP 10K 5% 1/16W
R592	1-216-829-11	s	METAL, CHIP 4.7K 5% 1/16W
R593	1-216-089-91	s	METAL, CHIP 47k 5% 1/10W
RB501	1-239-444-11	s	RESUSTIR BLOCK, CHIP 220K
RB502	1-236-908-11	s	RESISTOR, NETWORK, CHIP 10k
RB503	1-236-908-11	s	RESISTOR, NETWORK, CHIP 10k
RB504	1-239-444-11	s	RESUSTIR BLOCK, CHIP 220K
RV501	1-241-261-41	s	RES, ADJ, METAL 1K

AT-127 BOARD

Ref. No. or Q'ty	Part No.	SP	Description
*1-*4:For DSR-500WS/500WSP			
*1:Serial No. 10001-10730(UC), 30001-30220(J), 40001-40370(CE)			
*2:Serial No. 10731-(UC), 30221-(J), 40371-(CE)			
*3:Serial No. 10001-12495(UC), 30001-32170(J), 40001-43090(CE)			
*4:Serial No. 12496- (UC), 32171- (J), 43091- (CE)			
1pc	A-8322-144-A	o	MOUNTED CIRCUIT BOARD, AT-127
1pc	3-709-100-01	o	COVER, IC SOCKET
C501	1-113-991-11	s	TANTALUM, CHIP 33uF 20% 16V
C502	1-113-682-11	s	TANTALUM, CHIP 33uF 20% 10V
C503	1-164-156-11	s	CERAMIC, CHIP 0.1uF 25V
C504	1-164-156-11	s	CERAMIC, CHIP 0.1uF 25V
C505	1-164-156-11	s	CERAMIC, CHIP 0.1uF 25V
C506	1-164-156-11	s	CERAMIC, CHIP 0.1uF 25V
C507	1-135-149-21	s	TANTALUM, CHIP 2.2uF 10% 10V
C508	1-164-156-11	s	CERAMIC, CHIP 0.1uF 25V
C509	1-126-393-11	s	ELECT, CHIP 33uF 20% 10V
C510	1-104-851-11	s	TANTALUM, CHIP 10uF 20% 10V
C511	1-164-156-11	s	CERAMIC, CHIP 0.1uF 25V
C512	1-164-156-11	s	CERAMIC, CHIP 0.1uF 25V
C513	1-164-156-11	s	CERAMIC, CHIP 0.1uF 25V
C514	1-164-156-11	s	CERAMIC, CHIP 0.1uF 25V
C515	1-126-393-11	s	ELECT, CHIP 33uF 20% 10V
C516	1-104-851-11	s	TANTALUM, CHIP 10uF 20% 10V
C517	1-164-156-11	s	CERAMIC, CHIP 0.1uF 25V
C518	1-162-921-11	s	CERAMIC, CHIP 33PF 5% 50V
C519	1-162-910-11	s	CERAMIC, CHIP 5PF 50V
C520	1-104-851-11	s	TANTALUM, CHIP 10uF 20% 10V
C521	1-104-851-11	s	TANTALUM, CHIP 10uF 20% 10V
C522	1-164-156-11	s	CERAMIC, CHIP 0.1uF 25V
C523	1-164-156-11	s	CERAMIC, CHIP 0.1uF 25V
C524	1-164-156-11	s	CERAMIC, CHIP 0.1uF 25V
C525	1-164-156-11	s	CERAMIC, CHIP 0.1uF 25V
C526	1-164-156-11	s	CERAMIC, CHIP 0.1uF 25V
C527	1-164-156-11	s	CERAMIC, CHIP 0.1uF 25V
C528	1-164-156-11	s	CERAMIC, CHIP 0.1uF 25V
C529	1-104-851-11	s	TANTALUM, CHIP 10uF 20% 10V
C530	1-164-156-11	s	CERAMIC, CHIP 0.1uF 25V
C531	1-164-156-11	s	CERAMIC, CHIP 0.1uF 25V
C532	1-162-964-11	s	CERAMIC, CHIP 0.001uF 10% 50V
C533	1-164-156-11	s	CERAMIC, CHIP 0.1uF 25V
C534	1-164-156-11	s	CERAMIC, CHIP 0.1uF 25V
C536	1-162-964-11	s	CERAMIC, CHIP 0.001uF 10% 50V
C537	1-164-156-11	s	CERAMIC, CHIP 0.1uF 25V
C538	1-164-156-11	s	CERAMIC, CHIP 0.1uF 25V
C539	1-164-156-11	s	CERAMIC, CHIP 0.1uF 25V
C540	1-104-851-11	s	TANTALUM, CHIP 10uF 20% 10V
C541	1-164-156-11	s	CERAMIC, CHIP 0.1uF 25V
C542	1-162-964-11	s	CERAMIC, CHIP 0.001uF 10% 50V
C543	1-164-156-11	s	CERAMIC, CHIP 0.1uF 25V
C544	1-162-964-11	s	CERAMIC, CHIP 0.001uF 10% 50V
C545	1-126-397-11	s	ELECT, CHIP 33uF 20% 25V
C546	1-126-397-11	s	ELECT, CHIP 33uF 20% 25V
C547	1-104-851-11	s	TANTALUM, CHIP 10uF 20% 10V
C548	1-164-156-11	s	CERAMIC, CHIP 0.1uF 25V
C549	1-164-156-11	s	CERAMIC, CHIP 0.1uF 25V
C550	1-104-851-11	s	TANTALUM, CHIP 10uF 20% 10V
C551	1-135-177-21	s	TANTALUM, CHIP 1uF 10% 25V
C552	1-162-923-11	s	CERAMIC, CHIP 47PF 5% 50V
C553 *3	1-162-917-11	s	CERAMIC, CHIP 15PF 5% 50V
*4	1-162-916-11	s	CERAMIC, CHIP 12PF 5% 50V

(AT-127 BOARD)

Ref. No. or Q'ty	Part No.	SP	Description
C554	1-164-156-11	s	CERAMIC, CHIP 0.1uF 25V
C555	1-164-156-11	s	CERAMIC, CHIP 0.1uF 25V
C559	1-162-970-11	s	CERAMIC, CHIP 0.01uF 10% 25V
C701	1-164-156-11	s	CERAMIC, CHIP 0.1uF 25V
C702	1-113-682-11	s	TANTALUM, CHIP 33uF 20% 10V
C703	1-164-156-11	s	CERAMIC, CHIP 0.1uF 25V
C704	1-113-682-11	s	TANTALUM, CHIP 33uF 20% 10V
C705	1-113-642-11	s	TANTALUM, CHIP 47uF 20% 10V
C706	1-113-642-11	s	TANTALUM, CHIP 47uF 20% 10V
C707	1-164-156-11	s	CERAMIC, CHIP 0.1uF 25V
C710	1-113-682-11	s	TANTALUM, CHIP 33uF 20% 10V
C711	1-164-156-11	s	CERAMIC, CHIP 0.1uF 25V
C712	1-162-964-11	s	CERAMIC, CHIP 0.001uF 10% 50V
C713	1-162-964-11	s	CERAMIC, CHIP 0.001uF 10% 50V
C714	1-113-682-11	s	TANTALUM, CHIP 33uF 20% 10V
C715	1-107-689-21	s	TANTALUM, CHIP 1uF 20% 35V
C716	1-162-917-11	s	CERAMIC, CHIP 15PF 5% 50V
C717	1-162-919-11	s	CERAMIC, CHIP 22PF 5% 50V
C719	1-113-682-11	s	TANTALUM, CHIP 33uF 20% 10V
C720	1-113-682-11	s	TANTALUM, CHIP 33uF 20% 10V
C721	1-164-156-11	s	CERAMIC, CHIP 0.1uF 25V
C729	1-164-156-11	s	CERAMIC, CHIP 0.1uF 25V
C730	1-164-156-11	s	CERAMIC, CHIP 0.1uF 25V
C731	1-164-156-11	s	CERAMIC, CHIP 0.1uF 25V
C732	1-162-927-11	s	CERAMIC, CHIP 100PF 5% 50V
C733	1-164-156-11	s	CERAMIC, CHIP 0.1uF 25V
C734	1-113-682-11	s	TANTALUM, CHIP 33uF 20% 10V
C735	1-164-156-11	s	CERAMIC, CHIP 0.1uF 25V
C736	1-162-964-11	s	CERAMIC, CHIP 0.001uF 10% 50V
C740	1-164-156-11	s	CERAMIC, CHIP 0.1uF 25V
C741	1-164-156-11	s	CERAMIC, CHIP 0.1uF 25V
C742	1-164-156-11	s	CERAMIC, CHIP 0.1uF 25V
C743	1-113-682-11	s	TANTALUM, CHIP 33uF 20% 10V
C744	1-164-156-11	s	CERAMIC, CHIP 0.1uF 25V
C745	1-164-156-11	s	CERAMIC, CHIP 0.1uF 25V
CN503	1-580-789-21	o	PIN, CONNECTOR (SMD) 6P
CNI703	1-251-496-21	o	SOCKET, IC
CV501	1-141-368-11	s	CAP, CHIP TRIMMER 30PF
CV502	1-141-368-11	s	CAP, CHIP TRIMMER 30PF
CV701	1-141-422-11	s	CAP, CHIP TRIMMER 10PF
D501	8-719-029-64	s	DIODE RD4.7uH-T1
D502	8-719-050-51	s	DIODE RD9.1UM-T1B2
D503	8-719-421-69	s	DIODE MA133
D504	8-719-421-69	s	DIODE MA133
D505	8-719-421-69	s	DIODE MA133
D506	8-719-421-69	s	DIODE MA133
D507	8-719-421-69	s	DIODE MA133
D508	8-719-421-69	s	DIODE MA133
D509	8-719-421-69	s	DIODE MA133
D510	8-719-421-69	s	DIODE MA133
D701	8-719-975-40	s	DIODE RB411D
D702	8-719-421-69	s	DIODE MA133
D703	8-719-421-69	s	DIODE MA133
D705	8-719-027-95	s	DIODE HSM88WK
IC501	8-759-185-42	s	IC LM4040AIM3-2.5
IC502	8-759-669-45	s	IC TL062CPWR-12
IC504	8-759-589-29	s	IC X24645S8I-2.7T2
IC506	8-759-049-77	s	IC SN74HC244APWR

(AT-127 BOARD)

Ref. No. or Q'ty	Part No.	SP	Description
IC507	8-759-659-71	s	IC SN74HC165APWR
IC508	8-752-392-03	s	IC CXD1095BR
IC509	8-759-082-58	s	IC TC7W08FU
IC510	8-759-594-35	s	IC UPD6453GT-658-E2
IC511	8-759-660-18	s	IC SN74HC74APWR
IC512	8-759-338-95	s	IC NJM2903V(TE2)
IC513	8-759-257-96	s	IC TC7S14FU(TE85R)
IC514	8-759-659-96	s	IC SN74HC08APWR
IC515	8-759-082-59	s	IC TC7W32FU
IC516	8-759-058-58	s	IC TC7S04FU(TE85R)
IC517	8-759-082-55	s	IC TC7W00FU
IC518	8-759-669-60	s	IC TLC272CPWR
IC519	8-759-009-05	s	IC MC14051BF
IC520	8-759-669-45	s	IC TL062CPWR-12
IC521	8-759-064-35	s	IC MB88346BPFV-EF
IC522	8-759-669-45	s	IC TL062CPWR-12
IC524	8-759-082-60	s	IC TC7S66FU
IC525	8-759-594-35	s	IC UPD6453GT-658-E2
IC526	8-759-660-09	s	IC SN74HC158APWR
IC527	8-759-058-64	s	IC TC7S32FU(TE85R)
IC528	8-759-064-35	s	IC MB88346BPFV-EF
IC530	8-759-082-60	s	IC TC7S66FU
IC701	8-759-532-02	s	IC CY62256LL-70ZC-T2
IC702	8-759-532-02	s	IC CY62256LL-70ZC-T2
IC703	6-800-375-01	o	IC 29F800B-DSR500WSV1.12
IC704	8-759-058-58	s	IC TC7S04FU(TE85R)
IC708 *1	8-759-421-83	s	IC HD6437034SC81F
*2	8-759-489-89	s	IC HD6437034AD49F
IC709	8-759-542-91	s	IC S-80840ANUP-ED4-T2
IC711	8-759-182-95	s	IC HD151015T
IC712	8-759-196-96	s	IC TC7SH08FU-TE85R
IC717	8-759-252-59	s	IC MAX202CSE
IC718	8-759-082-59	s	IC TC7W32FU
IC719	8-759-058-58	s	IC TC7S04FU(TE85R)
IC720	8-759-082-57	s	IC TC7W04FU
IC721	8-759-429-23	s	IC TL16C550CPT
IC722	8-759-083-94	s	IC TC7W74FU
L501	1-410-385-11	s	INDUCTOR, CHIP 22uH
L502	1-410-385-11	s	INDUCTOR, CHIP 22uH
L503	1-412-955-11	s	INDUCTOR 22uH
L504	1-412-963-11	s	INDUCTOR 100uH
L505	1-412-955-11	s	INDUCTOR 22uH
L506	1-412-955-11	s	INDUCTOR 22uH
L507	1-412-955-11	s	INDUCTOR 22uH
L508	1-410-385-11	s	INDUCTOR, CHIP 22uH
L509	1-412-955-11	s	INDUCTOR 22uH
L510	1-410-385-11	s	INDUCTOR, CHIP 22uH
L511	1-412-282-41	s	INDUCTOR, CHIP 470UH
L512	1-412-282-41	s	INDUCTOR, CHIP 470UH
L513	1-412-957-11	s	INDUCTOR 33uH
L701	1-412-955-11	s	INDUCTOR 22uH
L702	1-412-943-11	s	INDUCTOR 2.2uH
L703	1-412-955-11	s	INDUCTOR 22uH
L704	1-412-955-11	s	INDUCTOR 22uH
L706	1-412-955-11	s	INDUCTOR 22uH
L707	1-412-955-11	s	INDUCTOR 22uH
Q501	8-729-101-07	s	TRANSISTOR 2SB798
Q502	8-729-402-19	s	TRANSISTOR XN6501

(AT-127 BOARD)

Ref. No. or Q'ty	Part No.	SP	Description
Q503	8-729-402-19	s	TRANSISTOR XN6501
Q504	8-729-905-35	s	TRANSISTOR 2SC4081-R
Q505	8-729-905-35	s	TRANSISTOR 2SC4081-R
Q506	8-729-905-35	s	TRANSISTOR 2SC4081-R
Q507	8-729-142-90	s	TRANSISTOR 2SK853-K5
Q508	8-729-141-75	s	TRANSISTOR 2SD596DV345
Q509	8-729-141-48	s	TRANSISTOR 2SB624-BV345
Q510	8-729-905-35	s	TRANSISTOR 2SC4081-R
Q511	8-729-905-35	s	TRANSISTOR 2SC4081-R
Q512	8-729-026-53	s	TRANSISTOR 2SA1576A-T106-QR
Q701	8-729-402-19	s	TRANSISTOR XN6501
R501	1-218-881-11	s	METAL, CHIP 27K 0.50% 1/16W
R502	1-216-833-91	s	METAL, CHIP 10K 5% 1/16W
R503	1-218-851-11	s	METAL, CHIP 1.5K 0.50% 1/16W
R504	1-218-857-11	s	METAL, CHIP 2.7K 0.50% 1/16W
R505	1-218-839-11	s	METAL, CHIP 470 0.50% 1/16W
R506	1-218-859-11	s	METAL, CHIP 3.3K 0.50% 1/16W
R507	1-216-839-11	s	METAL, CHIP 33K 5% 1/16W
R508	1-216-827-11	s	METAL, CHIP 3.3K 5% 1/16W
R509	1-216-809-11	s	METAL, CHIP 100 5% 1/16W
R510	1-216-833-91	s	METAL, CHIP 10K 5% 1/16W
R511	1-216-809-11	s	METAL, CHIP 100 5% 1/16W
R512	1-216-841-11	s	METAL, CHIP 47K 5% 1/16W
R513	1-216-841-11	s	METAL, CHIP 47K 5% 1/16W
R514	1-216-841-11	s	METAL, CHIP 47K 5% 1/16W
R515	1-216-841-11	s	METAL, CHIP 47K 5% 1/16W
R516	1-216-837-11	s	METAL, CHIP 22K 5% 1/16W
R517	1-216-819-11	s	METAL, CHIP 680 5% 1/16W
R518	1-216-819-11	s	METAL, CHIP 680 5% 1/16W
R519	1-216-837-11	s	METAL, CHIP 22K 5% 1/16W
R520	1-218-847-11	s	METAL, CHIP 1K 0.50% 1/16W
R521	1-216-837-11	s	METAL, CHIP 22K 5% 1/16W
R522	1-216-833-91	s	METAL, CHIP 10K 5% 1/16W
R523	1-218-863-11	s	METAL, CHIP 4.7K 0.50% 1/16W
R524	1-216-845-11	s	METAL, CHIP 100K 5% 1/16W
R525	1-216-845-11	s	METAL, CHIP 100K 5% 1/16W
R526	1-216-845-11	s	METAL, CHIP 100K 5% 1/16W
R527	1-216-845-11	s	METAL, CHIP 100K 5% 1/16W
R528	1-218-847-11	s	METAL, CHIP 1K 0.50% 1/16W
R529	1-218-847-11	s	METAL, CHIP 1K 0.50% 1/16W
R530	1-216-833-91	s	METAL, CHIP 10K 5% 1/16W
R531	1-218-847-11	s	METAL, CHIP 1K 0.50% 1/16W
R532	1-216-839-11	s	METAL, CHIP 33K 5% 1/16W
R533	1-218-875-11	s	METAL, CHIP 15K 0.50% 1/16W
R534	1-218-882-11	s	METAL, CHIP 30K 0.50% 1/16W
R535	1-218-875-11	s	METAL, CHIP 15K 0.50% 1/16W
R536	1-216-837-11	s	METAL, CHIP 22K 5% 1/16W
R537	1-216-837-11	s	METAL, CHIP 22K 5% 1/16W
R538	1-216-863-11	s	METAL, CHIP 3.3M 5% 1/16W
R539	1-216-863-11	s	METAL, CHIP 3.3M 5% 1/16W
R540	1-218-847-11	s	METAL, CHIP 1K 0.50% 1/16W
R541	1-216-833-91	s	METAL, CHIP 10K 5% 1/16W
R542	1-216-833-91	s	METAL, CHIP 10K 5% 1/16W
R543	1-218-847-11	s	METAL, CHIP 1K 0.50% 1/16W
R544	1-218-847-11	s	METAL, CHIP 1K 0.50% 1/16W
R545	1-218-861-11	s	METAL, CHIP 3.9K 0.50% 1/16W
R546	1-218-847-11	s	METAL, CHIP 1K 0.50% 1/16W
R547	1-216-857-11	s	METAL, CHIP 1M 5% 1/16W

(AT-127 BOARD)

Ref. No. or Q'ty	Part No.	SP	Description
R548	1-218-893-11	s	METAL, CHIP 82K 0.50% 1/16W
R549	1-218-871-11	s	METAL, CHIP 10K 0.50% 1/16W
R550	1-218-893-11	s	METAL, CHIP 82K 0.50% 1/16W
R551	1-218-871-11	s	METAL, CHIP 10K 0.50% 1/16W
R552	1-216-845-11	s	METAL, CHIP 100K 5% 1/16W
R553	1-216-845-11	s	METAL, CHIP 100K 5% 1/16W
R554	1-218-871-11	s	METAL, CHIP 10K 0.50% 1/16W
R555	1-218-871-11	s	METAL, CHIP 10K 0.50% 1/16W
R558	1-216-857-11	s	METAL, CHIP 1M 5% 1/16W
R559	1-218-867-11	s	METAL, CHIP 6.8K 0.50% 1/16W
R560	1-218-879-11	s	METAL, CHIP 22K 0.50% 1/16W
R561	1-218-869-11	s	METAL, CHIP 8.2K 0.50% 1/16W
R562	1-218-865-11	s	METAL, CHIP 5.6K 0.50% 1/16W
R563	1-216-845-11	s	METAL, CHIP 100K 5% 1/16W
R564	1-216-841-11	s	METAL, CHIP 47K 5% 1/16W
R565	1-218-863-11	s	METAL, CHIP 4.7K 0.50% 1/16W
R566	1-216-857-11	s	METAL, CHIP 1M 5% 1/16W
R567	1-218-861-11	s	METAL, CHIP 3.9K 0.50% 1/16W
R568	1-218-867-11	s	METAL, CHIP 6.8K 0.50% 1/16W
R569	1-218-879-11	s	METAL, CHIP 22K 0.50% 1/16W
R570	1-218-870-11	s	METAL, CHIP 9.1K 0.50% 1/16W
R571	1-218-865-11	s	METAL, CHIP 5.6K 0.50% 1/16W
R572	1-216-809-11	s	METAL, CHIP 100 5% 1/16W
R573	1-216-857-11	s	METAL, CHIP 1M 5% 1/16W
R574	1-216-845-11	s	METAL, CHIP 100K 5% 1/16W
R575	1-216-845-11	s	METAL, CHIP 100K 5% 1/16W
R576	1-216-833-91	s	METAL, CHIP 10K 5% 1/16W
R577	1-216-807-11	s	METAL, CHIP 68 5% 1/16W
R578	1-216-807-11	s	METAL, CHIP 68 5% 1/16W
R579	1-216-807-11	s	METAL, CHIP 68 5% 1/16W
R580	1-216-807-11	s	METAL, CHIP 68 5% 1/16W
R581	1-216-833-91	s	METAL, CHIP 10K 5% 1/16W
R582	1-216-845-11	s	METAL, CHIP 100K 5% 1/16W
R583	1-216-837-11	s	METAL, CHIP 22K 5% 1/16W
R585	1-216-833-91	s	METAL, CHIP 10K 5% 1/16W
R586	1-216-817-11	s	METAL, CHIP 470 5% 1/16W
R587	1-216-833-91	s	METAL, CHIP 10K 5% 1/16W
R588	1-218-847-11	s	METAL, CHIP 1K 0.50% 1/16W
R589	1-216-809-11	s	METAL, CHIP 100 5% 1/16W
R590	1-216-809-11	s	METAL, CHIP 100 5% 1/16W
R591	1-218-863-11	s	METAL, CHIP 4.7K 0.50% 1/16W
R592	1-216-845-11	s	METAL, CHIP 100K 5% 1/16W
R593	1-216-809-11	s	METAL, CHIP 100 5% 1/16W
R594	1-216-833-91	s	METAL, CHIP 10K 5% 1/16W
R595	1-216-845-11	s	METAL, CHIP 100K 5% 1/16W
R596	1-218-863-11	s	METAL, CHIP 4.7K 0.50% 1/16W
R597	1-216-845-11	s	METAL, CHIP 100K 5% 1/16W
R598	1-216-809-11	s	METAL, CHIP 100 5% 1/16W
R599	1-216-817-11	s	METAL, CHIP 470 5% 1/16W
R601	1-218-861-11	s	METAL, CHIP 3.9K 0.50% 1/16W
R602	1-216-857-11	s	METAL, CHIP 1M 5% 1/16W
R616	1-218-863-11	s	METAL, CHIP 4.7K 0.50% 1/16W
R617	1-218-847-11	s	METAL, CHIP 1K 0.50% 1/16W
R618	1-218-847-11	s	METAL, CHIP 1K 0.50% 1/16W
R619	1-218-847-11	s	METAL, CHIP 1K 0.50% 1/16W
R620	1-218-847-11	s	METAL, CHIP 1K 0.50% 1/16W
R621	1-218-847-11	s	METAL, CHIP 1K 0.50% 1/16W
R622	1-218-847-11	s	METAL, CHIP 1K 0.50% 1/16W
R623	1-218-847-11	s	METAL, CHIP 1K 0.50% 1/16W

(AT-127 BOARD)

Ref. No. or Q'ty	Part No.	SP	Description
R624	1-218-847-11	s	METAL, CHIP 1K 0.50% 1/16W
R625	1-218-847-11	s	METAL, CHIP 1K 0.50% 1/16W
R626	1-218-847-11	s	METAL, CHIP 1K 0.50% 1/16W
R627	1-218-847-11	s	METAL, CHIP 1K 0.50% 1/16W
R628	1-218-847-11	s	METAL, CHIP 1K 0.50% 1/16W
R629	1-216-809-11	s	METAL, CHIP 100 5% 1/16W
R630	1-216-864-11	s	METAL, CHIP 0 5% 1/16W
R701	1-216-864-11	s	METAL, CHIP 0 5% 1/16W
R704	1-216-845-11	s	METAL, CHIP 100K 5% 1/16W
R705	1-216-845-11	s	METAL, CHIP 100K 5% 1/16W
R706	1-216-845-11	s	METAL, CHIP 100K 5% 1/16W
R707	1-216-845-11	s	METAL, CHIP 100K 5% 1/16W
R708	1-216-864-11	s	METAL, CHIP 0 5% 1/16W
R709	1-216-845-11	s	METAL, CHIP 100K 5% 1/16W
R711	1-216-845-11	s	METAL, CHIP 100K 5% 1/16W
R712	1-216-845-11	s	METAL, CHIP 100K 5% 1/16W
R713	1-218-847-11	s	METAL, CHIP 1K 0.50% 1/16W
R714	1-218-823-11	s	METAL, CHIP 100 0.50% 1/16W
R715	1-218-847-11	s	METAL, CHIP 1K 0.50% 1/16W
R716	1-218-823-11	s	METAL, CHIP 100 0.50% 1/16W
R717	1-216-845-11	s	METAL, CHIP 100K 5% 1/16W
R718	1-216-845-11	s	METAL, CHIP 100K 5% 1/16W
R719	1-216-845-11	s	METAL, CHIP 100K 5% 1/16W
R722	1-216-845-11	s	METAL, CHIP 100K 5% 1/16W
R724	1-216-845-11	s	METAL, CHIP 100K 5% 1/16W
R725	1-218-895-11	s	METAL, CHIP 100K 0.50% 1/16W
R726	1-216-845-11	s	METAL, CHIP 100K 5% 1/16W
R728	1-216-864-11	s	METAL, CHIP 0 5% 1/16W
R729	1-216-845-11	s	METAL, CHIP 100K 5% 1/16W
R730	1-216-845-11	s	METAL, CHIP 100K 5% 1/16W
R731	1-216-845-11	s	METAL, CHIP 100K 5% 1/16W
R732	1-216-809-11	s	METAL, CHIP 100 5% 1/16W
R733	1-216-809-11	s	METAL, CHIP 100 5% 1/16W
R737	1-216-809-11	s	METAL, CHIP 100 5% 1/16W
R738	1-216-809-11	s	METAL, CHIP 100 5% 1/16W
R739	1-216-833-91	s	METAL, CHIP 10K 5% 1/16W
R740	1-216-833-91	s	METAL, CHIP 10K 5% 1/16W
R741	1-216-833-91	s	METAL, CHIP 10K 5% 1/16W
R742	1-218-847-11	s	METAL, CHIP 1K 0.50% 1/16W
R743	1-218-847-11	s	METAL, CHIP 1K 0.50% 1/16W
R749	1-216-845-11	s	METAL, CHIP 100K 5% 1/16W
R750	1-216-845-11	s	METAL, CHIP 100K 5% 1/16W
R752	1-216-845-11	s	METAL, CHIP 100K 5% 1/16W
R754	1-216-833-91	s	METAL, CHIP 10K 5% 1/16W
R755	1-218-847-11	s	METAL, CHIP 1K 0.50% 1/16W
R756	1-216-809-11	s	METAL, CHIP 100 5% 1/16W
R757	1-216-845-11	s	METAL, CHIP 100K 5% 1/16W
R759	1-216-864-11	s	METAL, CHIP 0 5% 1/16W
R762	1-216-817-11	s	METAL, CHIP 470 5% 1/16W
R763	1-216-809-11	s	METAL, CHIP 100 5% 1/16W
R764	1-216-817-11	s	METAL, CHIP 470 5% 1/16W
RB501	1-239-309-11	s	RESISTOR BLOCK, CHIP 100KX8
RB502	1-236-904-11	s	RESISTOR BLOCK, CHIP 1KX4
RB503	1-236-907-11	s	RESISTOR BLOCK, CHIP 100KX4
RB504	1-236-904-11	s	RESISTOR BLOCK, CHIP 1KX4
RB505	1-236-907-11	s	RESISTOR BLOCK, CHIP 100KX4
RB506	1-236-907-11	s	RESISTOR BLOCK, CHIP 100KX4
RB507	1-236-907-11	s	RESISTOR BLOCK, CHIP 100KX4

(AT-127 BOARD)

Ref. No. or Q'ty	Part No.	SP	Description
RB508	1-236-904-11	s	RESISTOR BLOCK, CHIP 1KX4
RB509	1-236-904-11	s	RESISTOR BLOCK, CHIP 1KX4
RB510	1-236-907-11	s	RESISTOR BLOCK, CHIP 100KX4
RB505	1-236-907-11	s	RESISTOR BLOCK, CHIP 100KX4
RB506	1-236-907-11	s	RESISTOR BLOCK, CHIP 100KX4
RB507	1-236-907-11	s	RESISTOR BLOCK, CHIP 100KX4
RB508	1-236-904-11	s	RESISTOR BLOCK, CHIP 1KX4
RB509	1-236-904-11	s	RESISTOR BLOCK, CHIP 1KX4
RB510	1-236-907-11	s	RESISTOR BLOCK, CHIP 100KX4
RB701	1-239-309-11	s	RESISTOR BLOCK, CHIP 100KX8
RB702	1-239-309-11	s	RESISTOR BLOCK, CHIP 100KX8
RB703	1-236-904-11	s	RESISTOR BLOCK, CHIP 1KX4
RB704	1-236-907-11	s	RESISTOR BLOCK, CHIP 100KX4
RB705	1-239-309-11	s	RESISTOR BLOCK, CHIP 100KX8
RB706	1-239-426-11	s	RESISTOR BLOCK, CHIP 2.2KX4
RB707	1-239-412-11	s	RESISTOR BLOCK, CHIP 100
RB708	1-239-428-11	s	RESISTOR BLOCK, CHIP 3.3KX4
X702	1-760-273-11	s	CRYSTAL 20MHz

AT-150B BOARD

Ref. No. or Q'ty	Part No.	SP	Description
1pc	A-8329-974-A	s	MOUNTED CIRCUIT BOARD, AT-150B
1pc	3-709-100-01	o	COVER, IC SOCKET
C501	1-104-919-11	s	CAPACITOR,TANTALUM 10MF/25V
C502	1-119-751-11	s	CAPACITOR,TANTALUM 22MF/16V
C503	1-164-156-11	s	CAPACITOR,CERAMIC 0.1MF/25V F
C504	1-164-156-11	s	CAPACITOR,CERAMIC 0.1MF/25V F
C505	1-164-156-11	s	CAPACITOR,CERAMIC 0.1MF/25V F
C506	1-164-156-11	s	CAPACITOR,CERAMIC 0.1MF/25V F
C507	1-135-870-91	s	CAPACITOR, TANTALUM 2.2/16V
C508	1-164-156-11	s	CAPACITOR,CERAMIC 0.1MF/25V F
C509	1-126-393-11	s	CAPACITOR ELECT 33MF/10V(CHIP)
C510	1-119-751-11	s	CAPACITOR,TANTALUM 22MF/16V
C511	1-164-156-11	s	CAPACITOR,CERAMIC 0.1MF/25V F
C512	1-164-156-11	s	CAPACITOR,CERAMIC 0.1MF/25V F
C513	1-164-156-11	s	CAPACITOR,CERAMIC 0.1MF/25V F
C514	1-164-156-11	s	CAPACITOR,CERAMIC 0.1MF/25V F
C515	1-126-393-11	s	CAPACITOR ELECT 33MF/10V(CHIP)
C516	1-119-751-11	s	CAPACITOR,TANTALUM 22MF/16V
C517	1-164-156-11	s	CAPACITOR,CERAMIC 0.1MF/25V F
C518	1-162-921-11	s	CAPACITOR,CERAMIC 33PF/50V CH
C519	1-162-910-11	s	CAPACITOR,CERAMIC 5PF/50V 1608
C520	1-119-751-11	s	CAPACITOR,TANTALUM 22MF/16V
C521	1-119-751-11	s	CAPACITOR,TANTALUM 22MF/16V
C522	1-164-156-11	s	CAPACITOR,CERAMIC 0.1MF/25V F
C523	1-164-156-11	s	CAPACITOR,CERAMIC 0.1MF/25V F
C524	1-164-156-11	s	CAPACITOR,CERAMIC 0.1MF/25V F
C525	1-164-156-11	s	CAPACITOR,CERAMIC 0.1MF/25V F
C526	1-164-156-11	s	CAPACITOR,CERAMIC 0.1MF/25V F
C527	1-164-156-11	s	CAPACITOR,CERAMIC 0.1MF/25V F
C528	1-164-156-11	s	CAPACITOR,CERAMIC 0.1MF/25V F
C529	1-119-751-11	s	CAPACITOR,TANTALUM 22MF/16V
C530	1-164-156-11	s	CAPACITOR,CERAMIC 0.1MF/25V F
C531	1-164-156-11	s	CAPACITOR,CERAMIC 0.1MF/25V F
C532	1-162-964-11	s	CAPACITOR,CERAMIC 1000PF/50V B
C533	1-164-156-11	s	CAPACITOR,CERAMIC 0.1MF/25V F
C534	1-164-156-11	s	CAPACITOR,CERAMIC 0.1MF/25V F
C536	1-162-964-11	s	CAPACITOR,CERAMIC 1000PF/50V B
C537	1-164-156-11	s	CAPACITOR,CERAMIC 0.1MF/25V F
C538	1-164-156-11	s	CAPACITOR,CERAMIC 0.1MF/25V F
C539	1-164-156-11	s	CAPACITOR,CERAMIC 0.1MF/25V F
C540	1-119-751-11	s	CAPACITOR,TANTALUM 22MF/16V
C541	1-164-156-11	s	CAPACITOR,CERAMIC 0.1MF/25V F
C542	1-162-964-11	s	CAPACITOR,CERAMIC 1000PF/50V B
C543	1-164-156-11	s	CAPACITOR,CERAMIC 0.1MF/25V F
C544	1-162-964-11	s	CAPACITOR,CERAMIC 1000PF/50V B
C545	1-126-397-11	s	CAPACITOR ELECT 33MF/25V(CHIP)
C546	1-126-397-11	s	CAPACITOR ELECT 33MF/25V(CHIP)
C547	1-104-919-11	s	CAPACITOR,TANTALUM 10MF/25V
C548	1-164-156-11	s	CAPACITOR,CERAMIC 0.1MF/25V F
C549	1-164-156-11	s	CAPACITOR,CERAMIC 0.1MF/25V F
C550	1-104-919-11	s	CAPACITOR,TANTALUM 10MF/25V
C551	1-107-689-21	s	CAPACITOR,TANTALUM 1MF/35V
C552	1-162-923-11	s	CAPACITOR,CERAMIC 47PF/50V CH
C553	1-162-917-11	s	CAPACITOR,CERAMIC 15PF/50V CH
C554	1-164-156-11	s	CAPACITOR,CERAMIC 0.1MF/25V F
C555	1-164-156-11	s	CAPACITOR,CERAMIC 0.1MF/25V F
C559	1-162-970-11	s	CAPACITOR CERAMIC 0.01MF/25V B
C560	1-164-156-11	s	CAPACITOR,CERAMIC 0.1MF/25V F

(AT-150B BOARD)

Ref. No. or Q'ty	Part No.	SP	Description
C576	1-164-156-11	s	CAPACITOR,CERAMIC 0.1MF/25V F
C577	1-164-156-11	s	CAPACITOR,CERAMIC 0.1MF/25V F
C578	1-164-156-11	s	CAPACITOR,CERAMIC 0.1MF/25V F
C579	1-164-156-11	s	CAPACITOR,CERAMIC 0.1MF/25V F
C580	1-164-156-11	s	CAPACITOR,CERAMIC 0.1MF/25V F
C701	1-164-156-11	s	CAPACITOR,CERAMIC 0.1MF/25V F
C702	1-119-751-11	s	CAPACITOR,TANTALUM 22MF/16V
C703	1-164-156-11	s	CAPACITOR,CERAMIC 0.1MF/25V F
C704	1-119-751-11	s	CAPACITOR,TANTALUM 22MF/16V
C705	1-119-751-11	s	CAPACITOR,TANTALUM 22MF/16V
C706	1-119-751-11	s	CAPACITOR,TANTALUM 22MF/16V
C707	1-164-156-11	s	CAPACITOR,CERAMIC 0.1MF/25V F
C710	1-119-751-11	s	CAPACITOR,TANTALUM 22MF/16V
C711	1-164-156-11	s	CAPACITOR,CERAMIC 0.1MF/25V F
C712	1-162-964-11	s	CAPACITOR,CERAMIC 1000PF/50V B
C713	1-162-964-11	s	CAPACITOR,CERAMIC 1000PF/50V B
C714	1-119-751-11	s	CAPACITOR,TANTALUM 22MF/16V
C715	1-107-689-21	s	CAPACITOR,TANTALUM 1MF/35V
C716	1-162-912-11	s	CAPACITOR,CERAMIC 7PF/50V 1608
C717	1-162-919-11	s	CAPACITOR,CERAMIC 22PF/50V CH
C720	1-119-751-11	s	CAPACITOR,TANTALUM 22MF/16V
C721	1-164-156-11	s	CAPACITOR,CERAMIC 0.1MF/25V F
C729	1-164-156-11	s	CAPACITOR,CERAMIC 0.1MF/25V F
C730	1-164-156-11	s	CAPACITOR,CERAMIC 0.1MF/25V F
C731	1-164-156-11	s	CAPACITOR,CERAMIC 0.1MF/25V F
C732	1-162-927-11	s	CAPACITOR,CERAMIC 100PF/50V CH
C733	1-164-156-11	s	CAPACITOR,CERAMIC 0.1MF/25V F
C734	1-119-751-11	s	CAPACITOR,TANTALUM 22MF/16V
C735	1-164-156-11	s	CAPACITOR,CERAMIC 0.1MF/25V F
C736	1-162-964-11	s	CAPACITOR,CERAMIC 1000PF/50V B
C740	1-164-156-11	s	CAPACITOR,CERAMIC 0.1MF/25V F
C741	1-164-156-11	s	CAPACITOR,CERAMIC 0.1MF/25V F
C742	1-164-156-11	s	CAPACITOR,CERAMIC 0.1MF/25V F
C743	1-119-751-11	s	CAPACITOR,TANTALUM 22MF/16V
C744	1-164-156-11	s	CAPACITOR,CERAMIC 0.1MF/25V F
C745	1-164-156-11	s	CAPACITOR,CERAMIC 0.1MF/25V F
C748	1-119-751-11	s	CAPACITOR,TANTALUM 22MF/16V
CN501	1-774-603-41	s	CONNECTOR, BOARD TO BOARD 100P
CN503	1-580-789-21	o	PIN,CONNECTOR (SMD) 6P
CV501	1-141-368-11	s	CAPACITOR,CHIP TRIMMER 30PF
CV502	1-141-368-11	s	CAPACITOR,CHIP TRIMMER 30PF
CV701	1-141-422-11	s	CAPACITOR TRIMER 10PF (CHIP)
D501	8-719-017-03	s	DIODE 02DZ4.7-TPH3
D502	8-719-050-51	s	DIODE RD9.1UM-T1B2
D503	8-719-421-69	s	DIODE MA133
D504	8-719-421-69	s	DIODE MA133
D505	8-719-421-69	s	DIODE MA133
D506	8-719-421-69	s	DIODE MA133
D507	8-719-421-69	s	DIODE MA133
D508	8-719-421-69	s	DIODE MA133
D509	8-719-421-69	s	DIODE MA133
D512	8-719-421-69	s	DIODE MA133
D702	8-719-421-69	s	DIODE MA133
D703	8-719-421-69	s	DIODE MA133
D705	8-719-027-95	s	DIODE HSM88WK
IC501	8-759-185-42	s	IC LM4040AIM3-2.5
IC502	8-759-327-01	s	IC NJM062V-TE2

(AT-150B BOARD)

Ref. No. or Q'ty	Part No.	SP	Description
IC504	8-759-589-29	s	IC X24645S8I-2.7T2
IC506	8-759-673-09	s	IC MM74HC244MTCX
IC507	8-759-659-71	s	IC SN74HC165APWR
IC508	8-752-392-03	s	IC CXD1095BR
IC509	8-759-082-58	s	IC TC7W08FU
IC510	8-759-594-35	s	IC UPD6453GT-658-E2
IC511	8-759-673-55	s	IC MM74HC74AMTCX
IC512	8-759-338-95	s	IC NJM2903V (TE2)
IC513	8-759-257-96	s	IC TC7S14FU (TE85R)
IC514	8-759-673-46	s	IC MM74HC08MTCX
IC515	8-759-673-52	s	IC MM74HC32MTCX
IC516	8-759-082-55	s	IC TC7W00FU
IC517	8-759-082-55	s	IC TC7W00FU
IC518	8-759-327-01	s	IC NJM062V-TE2
IC519	8-759-009-05	s	IC MC14051BF
IC520	8-759-327-01	s	IC NJM062V-TE2
IC521	8-759-064-36	s	IC MB88346BPFV
IC522	8-759-327-01	s	IC NJM062V-TE2
IC524	8-759-082-60	s	IC TC7S66FU
IC525	8-759-594-35	s	IC UPD6453GT-658-E2
IC526	8-759-660-09	s	IC SN74HC158APWR
IC527	8-759-058-64	s	IC TC7S32FU-TE85R
IC528	8-759-064-36	s	IC MB88346BPFV
IC530	8-759-082-60	s	IC TC7S66FU
IC531	8-759-058-64	s	IC TC7S32FU-TE85R
IC550	8-759-564-49	s	IC TC7W53FU-TE12R
IC551	8-759-564-49	s	IC TC7W53FU-TE12R
IC701	8-759-532-02	s	IC CY62256LL-70ZC-T2
IC702	8-759-532-02	s	IC CY62256LL-70ZC-T2
IC703	6-801-653-01	o	IC 29F800B-DSR370/570V1.03
IC708	8-759-489-89	s	IC HD6437034AD49F
IC709	8-759-542-91	s	IC S-80840ANUP-ED4-T2
IC711	8-759-549-15	s	IC SN74LV245APWR
IC712	8-759-196-96	s	IC TC7SH08FU (TE85R)
IC718	8-759-082-59	s	IC TC7W32FU
IC719	8-759-058-58	s	IC TC7S04FU-TE85R
IC720	8-759-082-57	s	IC TC7W04FU
IC721	8-759-429-23	s	IC TL16C550CPT
IC722	8-759-083-94	s	IC TC7W74FU
IC723	8-759-252-59	s	IC MAX202CSE
IC724	8-759-399-56	s	IC STK12C68-S45
IS703	1-251-496-21	o	SOCKET, IC
L501	1-412-955-11	s	INDUCTOR 22UH (2520)
L502	1-412-955-11	s	INDUCTOR 22UH (2520)
L503	1-412-955-11	s	INDUCTOR 22UH (2520)
L504	1-412-963-11	s	INDUCTOR 100UH (2520)
L505	1-412-955-11	s	INDUCTOR 22UH (2520)
L506	1-412-955-11	s	INDUCTOR 22UH (2520)
L507	1-412-955-11	s	INDUCTOR 22UH (2520)
L508	1-412-955-11	s	INDUCTOR 22UH (2520)
L509	1-412-955-11	s	INDUCTOR 22UH (2520)
L510	1-412-955-11	s	INDUCTOR 22UH (2520)
L511	1-412-282-41	s	INDUCTOR,CHIP 470UH (3225)
L512	1-412-282-41	s	INDUCTOR,CHIP 470UH (3225)
L513	1-412-957-11	s	INDUCTOR 33UH (2520)
L701	1-412-955-11	s	INDUCTOR 22UH (2520)
L702	1-412-943-11	s	INDUCTOR 2.2UH (2520)

(AT-150B BOARD)

Ref. No. or Q'ty	Part No.	SP	Description
L704	1-412-955-11	s	INDUCTOR 22UH (2520)
L706	1-412-955-11	s	INDUCTOR 22UH (2520)
L707	1-412-955-11	s	INDUCTOR 22UH (2520)
Q501	8-729-101-07	s	TRANSISTOR 2SB798
Q502	8-729-402-19	s	TRANSISTOR XN6501
Q503	8-729-402-19	s	TRANSISTOR XN6501
Q504	8-729-905-35	s	TRANSISTOR 2SC4081-R
Q505	8-729-905-35	s	TRANSISTOR 2SC4081-R
Q506	8-729-905-35	s	TRANSISTOR 2SC4081-R
Q508	8-729-141-75	s	TRANSISTOR 2SD596DV345
Q509	8-729-141-48	s	TRANSISTOR 2SB624-BV345
Q510	8-729-905-35	s	TRANSISTOR 2SC4081-R
Q511	8-729-905-35	s	TRANSISTOR 2SC4081-R
Q512	8-729-026-53	s	TRANSISTOR 2SA1576A-T106-QR
Q517	8-729-142-90	s	TRANSISTOR 2SK853-K5
Q701	8-729-402-19	s	TRANSISTOR XN6501
R501	1-218-881-11	s	RESISTOR, CHIP 27K 1/16W(1608)
R502	1-218-871-11	s	RESISTOR,CHIP 10K 1/16W (1608)
R503	1-218-851-11	s	RESISTOR,CHIP 1.5K 1/16W(1608)
R504	1-218-857-11	s	RESISTOR,CHIP 2.7K 1/16W(1608)
R505	1-218-839-11	s	RESISTOR,CHIP 470 1/16W (1608)
R506	1-218-859-11	s	RESISTOR,CHIP 3.3K 1/16W(1608)
R507	1-218-883-11	s	RESISTOR,CHIP 33K 1/16W (1608)
R508	1-218-859-11	s	RESISTOR,CHIP 3.3K 1/16W(1608)
R509	1-218-823-11	s	RESISTOR,CHIP 100 1/16W (1608)
R510	1-218-871-11	s	RESISTOR,CHIP 10K 1/16W (1608)
R511	1-218-823-11	s	RESISTOR,CHIP 100 1/16W (1608)
R512	1-218-887-11	s	RESISTOR,CHIP 47K 1/16W (1608)
R513	1-218-887-11	s	RESISTOR,CHIP 47K 1/16W (1608)
R514	1-218-887-11	s	RESISTOR,CHIP 47K 1/16W (1608)
R515	1-218-887-11	s	RESISTOR,CHIP 47K 1/16W (1608)
R516	1-218-879-11	s	RESISTOR,CHIP 22K 1/16W (1608)
R517	1-218-843-11	s	RESISTOR,CHIP 680 1/16W (1608)
R518	1-218-843-11	s	RESISTOR,CHIP 680 1/16W (1608)
R519	1-218-879-11	s	RESISTOR,CHIP 22K 1/16W (1608)
R520	1-218-847-11	s	RESISTOR, CHIP 1K 1/16W (1608)
R521	1-218-879-11	s	RESISTOR,CHIP 22K 1/16W (1608)
R522	1-218-871-11	s	RESISTOR,CHIP 10K 1/16W (1608)
R523	1-218-863-11	s	RESISTOR,CHIP 4.7K 1/16W(1608)
R524	1-218-895-11	s	RESISTOR,CHIP 100K 1/16W(1608)
R525	1-218-895-11	s	RESISTOR,CHIP 100K 1/16W(1608)
R526	1-218-895-11	s	RESISTOR,CHIP 100K 1/16W(1608)
R527	1-218-895-11	s	RESISTOR,CHIP 100K 1/16W(1608)
R528	1-218-847-11	s	RESISTOR, CHIP 1K 1/16W (1608)
R529	1-218-847-11	s	RESISTOR, CHIP 1K 1/16W (1608)
R530	1-218-871-11	s	RESISTOR,CHIP 10K 1/16W (1608)
R531	1-218-847-11	s	RESISTOR, CHIP 1K 1/16W (1608)
R532	1-218-883-11	s	RESISTOR,CHIP 33K 1/16W (1608)
R533	1-218-875-11	s	RESISTOR,CHIP 15K 1/16W (1608)
R534	1-218-882-11	s	RESISTOR, CHIP 30K 1/16W(1608)
R535	1-218-875-11	s	RESISTOR,CHIP 15K 1/16W (1608)
R536	1-218-879-11	s	RESISTOR,CHIP 22K 1/16W (1608)
R537	1-218-879-11	s	RESISTOR,CHIP 22K 1/16W (1608)
R538	1-216-863-11	s	RESISTOR,CHIP 3.3M 1/16W 1608
R539	1-216-863-11	s	RESISTOR,CHIP 3.3M 1/16W 1608
R540	1-218-871-11	s	RESISTOR,CHIP 10K 1/16W (1608)
R541	1-218-895-11	s	RESISTOR,CHIP 100K 1/16W(1608)
R542	1-218-871-11	s	RESISTOR,CHIP 10K 1/16W (1608)

(AT-150B BOARD)

Ref. No. or Q'ty	Part No.	SP	Description
R543	1-218-847-11	s	RESISTOR, CHIP 1K 1/16W (1608)
R544	1-218-847-11	s	RESISTOR, CHIP 1K 1/16W (1608)
R545	1-218-861-11	s	RESISTOR,CHIP 3.9K 1/16W(1608)
R546	1-218-847-11	s	RESISTOR, CHIP 1K 1/16W (1608)
R547	1-216-857-11	s	RESISTOR,CHIP 1M 1/16W(1608)
R548	1-218-893-11	s	RESISTOR, CHIP 82K 1/16W(1608)
R549	1-218-871-11	s	RESISTOR,CHIP 10K 1/16W (1608)
R550	1-218-893-11	s	RESISTOR, CHIP 82K 1/16W(1608)
R551	1-218-871-11	s	RESISTOR,CHIP 10K 1/16W (1608)
R552	1-218-895-11	s	RESISTOR,CHIP 100K 1/16W(1608)
R553	1-218-895-11	s	RESISTOR,CHIP 100K 1/16W(1608)
R554	1-218-871-11	s	RESISTOR,CHIP 10K 1/16W (1608)
R555	1-218-871-11	s	RESISTOR,CHIP 10K 1/16W (1608)
R558	1-216-857-11	s	RESISTOR,CHIP 1M 1/16W(1608)
R559	1-218-867-11	s	RESISTOR,CHIP 6.8K 1/16W(1608)
R560	1-218-879-11	s	RESISTOR,CHIP 22K 1/16W (1608)
R561	1-218-869-11	s	RESISTOR,CHIP 8.2K 1/16W(1608)
R562	1-218-865-11	s	RESISTOR,CHIP 5.6K 1/16W(1608)
R563	1-218-895-11	s	RESISTOR,CHIP 100K 1/16W(1608)
R564	1-218-887-11	s	RESISTOR,CHIP 47K 1/16W (1608)
R565	1-218-863-11	s	RESISTOR,CHIP 4.7K 1/16W(1608)
R566	1-216-857-11	s	RESISTOR,CHIP 1M 1/16W(1608)
R567	1-218-861-11	s	RESISTOR,CHIP 3.9K 1/16W(1608)
R568	1-218-867-11	s	RESISTOR,CHIP 6.8K 1/16W(1608)
R569	1-218-879-11	s	RESISTOR,CHIP 22K 1/16W (1608)
R570	1-218-870-11	s	RESISTOR,CHIP 9.1K 1/16W(1608)
R571	1-218-865-11	s	RESISTOR,CHIP 5.6K 1/16W(1608)
R572	1-218-823-11	s	RESISTOR,CHIP 100 1/16W (1608)
R573	1-216-857-11	s	RESISTOR,CHIP 1M 1/16W(1608)
R574	1-218-895-11	s	RESISTOR,CHIP 100K 1/16W(1608)
R575	1-218-895-11	s	RESISTOR,CHIP 100K 1/16W(1608)
R576	1-218-871-11	s	RESISTOR,CHIP 10K 1/16W (1608)
R577	1-211-989-11	s	RESISTOR,CHIP 68 1/16W (1608)
R578	1-211-989-11	s	RESISTOR,CHIP 68 1/16W (1608)
R579	1-211-989-11	s	RESISTOR,CHIP 68 1/16W (1608)
R580	1-211-989-11	s	RESISTOR,CHIP 68 1/16W (1608)
R581	1-218-871-11	s	RESISTOR,CHIP 10K 1/16W (1608)
R582	1-218-895-11	s	RESISTOR,CHIP 100K 1/16W(1608)
R583	1-218-879-11	s	RESISTOR,CHIP 22K 1/16W (1608)
R585	1-218-871-11	s	RESISTOR,CHIP 10K 1/16W (1608)
R586	1-218-839-11	s	RESISTOR,CHIP 470 1/16W (1608)
R587	1-218-871-11	s	RESISTOR,CHIP 10K 1/16W (1608)
R588	1-218-847-11	s	RESISTOR, CHIP 1K 1/16W (1608)
R589	1-218-823-11	s	RESISTOR,CHIP 100 1/16W (1608)
R590	1-218-823-11	s	RESISTOR,CHIP 100 1/16W (1608)
R591	1-218-863-11	s	RESISTOR,CHIP 4.7K 1/16W(1608)
R592	1-218-895-11	s	RESISTOR,CHIP 100K 1/16W(1608)
R593	1-218-823-11	s	RESISTOR,CHIP 100 1/16W (1608)
R594	1-218-871-11	s	RESISTOR,CHIP 10K 1/16W (1608)
R595	1-218-895-11	s	RESISTOR,CHIP 100K 1/16W(1608)
R596	1-218-863-11	s	RESISTOR,CHIP 4.7K 1/16W(1608)
R597	1-218-895-11	s	RESISTOR,CHIP 100K 1/16W(1608)
R598	1-218-823-11	s	RESISTOR,CHIP 100 1/16W (1608)
R599	1-218-839-11	s	RESISTOR,CHIP 470 1/16W (1608)
R601	1-218-861-11	s	RESISTOR,CHIP 3.9K 1/16W(1608)
R602	1-216-857-11	s	RESISTOR,CHIP 1M 1/16W(1608)
R616	1-218-863-11	s	RESISTOR,CHIP 4.7K 1/16W(1608)
R617	1-218-847-11	s	RESISTOR, CHIP 1K 1/16W (1608)
R618	1-218-847-11	s	RESISTOR, CHIP 1K 1/16W (1608)

(AT-150B BOARD)

Ref. No. or Q'ty	Part No.	SP	Description
R620	1-218-847-11	s	RESISTOR, CHIP 1K 1/16W (1608)
R621	1-218-847-11	s	RESISTOR, CHIP 1K 1/16W (1608)
R622	1-218-847-11	s	RESISTOR, CHIP 1K 1/16W (1608)
R623	1-218-847-11	s	RESISTOR, CHIP 1K 1/16W (1608)
R624	1-218-847-11	s	RESISTOR, CHIP 1K 1/16W (1608)
R625	1-218-847-11	s	RESISTOR, CHIP 1K 1/16W (1608)
R626	1-218-847-11	s	RESISTOR, CHIP 1K 1/16W (1608)
R627	1-218-847-11	s	RESISTOR, CHIP 1K 1/16W (1608)
R629	1-218-823-11	s	RESISTOR,CHIP 100 1/16W (1608)
R630	1-216-864-11	s	CONDUCTOR, CHIP (1608)
R651	1-218-863-11	s	RESISTOR,CHIP 4.7K 1/16W(1608)
R652	1-218-871-11	s	RESISTOR,CHIP 10K 1/16W (1608)
R653	1-218-859-11	s	RESISTOR,CHIP 3.3K 1/16W(1608)
R654	1-218-823-11	s	RESISTOR,CHIP 100 1/16W (1608)
R655	1-218-839-11	s	RESISTOR,CHIP 470 1/16W (1608)
R656	1-218-839-11	s	RESISTOR,CHIP 470 1/16W (1608)
R701	1-216-791-11	s	RESISTOR,CHIP 3.3 1/16W 1608
R702	1-218-871-11	s	RESISTOR,CHIP 10K 1/16W (1608)
R703	1-218-887-11	s	RESISTOR,CHIP 47K 1/16W (1608)
R704	1-218-895-11	s	RESISTOR,CHIP 100K 1/16W(1608)
R705	1-218-895-11	s	RESISTOR,CHIP 100K 1/16W(1608)
R706	1-218-895-11	s	RESISTOR,CHIP 100K 1/16W(1608)
R707	1-218-895-11	s	RESISTOR,CHIP 100K 1/16W(1608)
R708	1-216-864-11	s	CONDUCTOR, CHIP (1608)
R709	1-218-895-11	s	RESISTOR,CHIP 100K 1/16W(1608)
R711	1-218-895-11	s	RESISTOR,CHIP 100K 1/16W(1608)
R712	1-218-895-11	s	RESISTOR,CHIP 100K 1/16W(1608)
R713	1-218-847-11	s	RESISTOR, CHIP 1K 1/16W (1608)
R714	1-218-823-11	s	RESISTOR,CHIP 100 1/16W (1608)
R715	1-218-847-11	s	RESISTOR, CHIP 1K 1/16W (1608)
R716	1-218-823-11	s	RESISTOR,CHIP 100 1/16W (1608)
R717	1-218-895-11	s	RESISTOR,CHIP 100K 1/16W(1608)
R718	1-218-895-11	s	RESISTOR,CHIP 100K 1/16W(1608)
R719	1-218-895-11	s	RESISTOR,CHIP 100K 1/16W(1608)
R722	1-218-895-11	s	RESISTOR,CHIP 100K 1/16W(1608)
R724	1-218-895-11	s	RESISTOR,CHIP 100K 1/16W(1608)
R725	1-218-895-11	s	RESISTOR,CHIP 100K 1/16W(1608)
R726	1-218-895-11	s	RESISTOR,CHIP 100K 1/16W(1608)
R728	1-216-864-11	s	CONDUCTOR, CHIP (1608)
R729	1-218-895-11	s	RESISTOR,CHIP 100K 1/16W(1608)
R732	1-218-823-11	s	RESISTOR,CHIP 100 1/16W (1608)
R733	1-218-823-11	s	RESISTOR,CHIP 100 1/16W (1608)
R737	1-218-823-11	s	RESISTOR,CHIP 100 1/16W (1608)
R738	1-218-823-11	s	RESISTOR,CHIP 100 1/16W (1608)
R739	1-218-871-11	s	RESISTOR,CHIP 10K 1/16W (1608)
R740	1-218-871-11	s	RESISTOR,CHIP 10K 1/16W (1608)
R741	1-218-871-11	s	RESISTOR,CHIP 10K 1/16W (1608)
R742	1-218-839-11	s	RESISTOR,CHIP 470 1/16W (1608)
R743	1-218-847-11	s	RESISTOR, CHIP 1K 1/16W (1608)
R749	1-218-895-11	s	RESISTOR,CHIP 100K 1/16W(1608)
R750	1-218-895-11	s	RESISTOR,CHIP 100K 1/16W(1608)
R752	1-218-895-11	s	RESISTOR,CHIP 100K 1/16W(1608)
R754	1-218-871-11	s	RESISTOR,CHIP 10K 1/16W (1608)
R755	1-218-847-11	s	RESISTOR, CHIP 1K 1/16W (1608)
R756	1-218-823-11	s	RESISTOR,CHIP 100 1/16W (1608)
R757	1-218-895-11	s	RESISTOR,CHIP 100K 1/16W(1608)
R759	1-216-864-11	s	CONDUCTOR, CHIP (1608)
R762	1-218-839-11	s	RESISTOR,CHIP 470 1/16W (1608)
R763	1-218-823-11	s	RESISTOR,CHIP 100 1/16W (1608)

(AT-150B BOARD)

Ref. No. or Q'ty	Part No.	SP	Description
R764	1-218-839-11	s	RESISTOR,CHIP 470 1/16W (1608)
RB501	1-239-309-11	s	RESISTOR ARRAY,CHIP 100K
RB502	1-236-904-11	s	RESISTOR NETWORK 1K (1608)
RB503	1-236-907-11	s	RESISTOR BLOCK 100K (1608)
RB504	1-236-904-11	s	RESISTOR NETWORK 1K (1608)
RB505	1-236-907-11	s	RESISTOR BLOCK 100K (1608)
RB506	1-236-907-11	s	RESISTOR BLOCK 100K (1608)
RB507	1-236-907-11	s	RESISTOR BLOCK 100K (1608)
RB508	1-236-904-11	s	RESISTOR NETWORK 1K (1608)
RB509	1-236-904-11	s	RESISTOR NETWORK 1K (1608)
RB510	1-236-907-11	s	RESISTOR BLOCK 100K (1608)
RB701	1-239-309-11	s	RESISTOR ARRAY,CHIP 100K
RB702	1-239-309-11	s	RESISTOR ARRAY,CHIP 100K
RB703	1-236-904-11	s	RESISTOR NETWORK 1K (1608)
RB704	1-236-907-11	s	RESISTOR BLOCK 100K (1608)
RB705	1-239-309-11	s	RESISTOR ARRAY,CHIP 100K
RB706	1-239-426-11	s	NETWORK RESISTOR 2.2K (1608)
RB707	1-239-412-11	s	NETWORK, RESISTOR 100 (1608)
RB708	1-239-428-11	s	NETWORK RESISTOR 3.3K (1608)
X702	1-760-273-11	s	VIBRATOR, CRYSTAL

CC-68 BOARD

Ref. No. or Q'ty	Part No.	SP	Description
1pc	A-8277-832-C	o	MOUNTED CIRCUIT BOARD, CC-68
CN1	1-750-159-21	o	CONNECTOR, FPC 5P
Q1	8-729-926-31	s	PHOTO TRANSISTOR PT483F1S
S1	1-572-288-21	s	SWITCH, PUSH
S2	1-572-288-21	s	SWITCH, PUSH

CN-1519 BOARD

Ref. No. or Q'ty	Part No.	SP	Description
1pc	A-8317-811-A	o	MOUNTED CIRCUIT BOARD, CN-1519
CN2	1-766-566-11	o	CONNECTOR, ROUND TYPE (M)(26P)
FB101	1-414-552-11	s	FERRITE 0uH
FB102	1-414-552-11	s	FERRITE 0uH
FB103	1-414-552-11	s	FERRITE 0uH
FB104	1-414-552-11	s	FERRITE 0uH
FB105	1-414-552-11	s	FERRITE 0uH
FB106	1-414-552-11	s	FERRITE 0uH
FB107	1-414-552-11	s	FERRITE 0uH
FB108	1-414-552-11	s	FERRITE 0uH
FB109	1-414-552-11	s	FERRITE 0uH
FB110	1-414-552-11	s	FERRITE 0uH
FL101	1-239-896-12	s	FILTER, EMI (SMD)
FL102	1-239-896-12	s	FILTER, EMI (SMD)
FL103	1-239-896-12	s	FILTER, EMI (SMD)
FL104	1-239-896-12	s	FILTER, EMI (SMD)
FL105	1-239-896-12	s	FILTER, EMI (SMD)
FL106	1-239-896-12	s	FILTER, EMI (SMD)

```
-------------
CN-1811 BOARD
-------------
 Ref. No.
 or Q'ty  Part No.    SP Description

 1pc      A-8322-163-A s MOUNTED CIRCUIT BOARD, CN-1811
```

```
-------------
CN-1823 BOARD
-------------
 Ref. No.
 or Q'ty  Part No.    SP Description

 1pc      A-8322-181-B o MOUNTED CIRCUIT BOARD, CN-1823
 2pcs     7-621-771-06 s SCREW +B 2X5

 CN1      1-793-304-12 s SQUARE-BUILT CONNECTOR(1394)
 CN2      1-764-177-11 o PIN, CONNECTOR (SMD)(1.5MM) 7P
```

```
-------------
CN-1864 BOARD
-------------
 Ref. No.
 or Q'ty  Part No.    SP Description

 1pc      A-8322-167-A o MOUNTED CIRCUIT BOARD, CN-1864

 C401     1-163-021-91 s CERAMIC 0.01uF 10% 50V
 C402     1-163-021-91 s CERAMIC 0.01uF 10% 50V
 C403     1-163-021-91 s CERAMIC 0.01uF 10% 50V
 C404     1-163-021-91 s CERAMIC 0.01uF 10% 50V
 C405     1-163-021-91 s CERAMIC 0.01uF 10% 50V

 C406     1-163-021-91 s CERAMIC 0.01uF 10% 50V
 C407     1-163-021-91 s CERAMIC 0.01uF 10% 50V
 C408     1-163-021-91 s CERAMIC 0.01uF 10% 50V
 C409     1-163-021-91 s CERAMIC 0.01uF 10% 50V
 C410     1-163-021-91 s CERAMIC 0.01uF 10% 50V

 C411     1-163-021-91 s CERAMIC 0.01uF 10% 50V

 CN401    1-562-221-31 s CONNECTOR (ROUND TYPE)(R-F)12P
 CN402    1-695-890-21 o PIN, CONNECTOR (PC BOARD) 12P
```

```
-------------
CN-1865 BOARD
-------------
 Ref. No.
 or Q'ty  Part No.    SP Description

 1pc      A-8322-168-A o MOUNTED CIRCUIT BOARD, CN-1865
 1pc      3-604-416-01 o SHIELD FINGER(CN)

 C601     1-163-251-11 s CERAMIC, CHIP 100PF 5% 50V
 C602     1-163-021-91 s CERAMIC 0.01uF 10% 50V
 C603     1-163-243-11 s CERAMIC, CHIP 47PF 5% 50V
 C604     1-163-243-11 s CERAMIC, CHIP 47PF 5% 50V
 C605     1-163-243-11 s CERAMIC, CHIP 47PF 5% 50V

 C606     1-163-243-11 s CERAMIC, CHIP 47PF 5% 50V

 CN601    1-565-443-11 o CONNECTOR, 10P, FEMALE
 CN602    1-690-107-11 o CONNECTOR, BOARD TO BOARD 12P
 CN603    1-562-382-31 s CONNECTOR, BNC, FEMALE

 FB601    1-414-445-11 s FERRITE 0uH
 FB602    1-414-445-11 s FERRITE 0uH
 FB603    1-414-445-11 s FERRITE 0uH
 FB604    1-414-445-11 s FERRITE 0uH
 FB605    1-414-445-11 s FERRITE 0uH

 FL601    1-239-077-11 s FILTER, EMI
 FL602    1-239-896-12 s FILTER, EMI (SMD)
 FL603    1-239-896-12 s FILTER, EMI (SMD)
```

```
-------------
CN-1866 BOARD
-------------
 Ref. No.
 or Q'ty  Part No.    SP Description

 1pc      1-673-947-12 o PRINTED CIRCUIT BOARD, CN-1866

 C801     1-163-009-11 s CERAMIC, CHIP 0.001uF 10% 50V
 C802     1-163-009-11 s CERAMIC, CHIP 0.001uF 10% 50V

 CN801    1-507-980-41 s JACK, MINI

 W801     1-958-492-11 o HARNESS, SUB (CN1518)
```

```
-------------
CN-1867 BOARD
-------------
 Ref. No.
 or Q'ty  Part No.    SP Description

 1pc      1-673-950-11 o PRINTED CIRCUIT BOARD, CN-1867

 C701     1-163-017-00 s CERAMIC, CHIP 0.0047uF 10% 50V
 C702     1-163-017-00 s CERAMIC, CHIP 0.0047uF 10% 50V

 CN701    1-507-980-41 s JACK, MINI

 FB701    1-543-775-11 s FERRITE 0uH

 R701     1-216-005-00 s METAL 15 5% 1/10W
 R702     1-216-005-00 s METAL 15 5% 1/10W

 W701     1-958-491-11 o HARNESS, SUB (CN1549)
```

CN-1873 BOARD

Ref. No. or Q'ty	Part No.	SP	Description
1pc	1-673-955-11	o	PRINTED CIRCUIT BOARD, CN-1873
CN1	1-563-929-11	s	CONNECTOR, 4P, FEMALE
W1	1-958-493-11	o	HARNESS, SUB (CN1693)

CN-1874 BOARD

Ref. No. or Q'ty	Part No.	SP	Description
1pc	1-673-956-11	o	PRINTED CIRCUIT BOARD, CN-1874
2pcs	3-709-106-01	o	TERMINAL, LIGHT
1pc	3-709-108-01	o	HOLDER, CONNECTOR
1pc	3-709-107-01	o	HOUSING, LIGHT TERMINAL
C1	1-163-021-91	s	CERAMIC 0.01uF 10% 50V
C2	1-163-021-91	s	CERAMIC 0.01uF 10% 50V
CN1	1-560-364-00	o	CONNECTOR POST HEADER,ILG (2P)

CN-2277 BOARD

Ref. No. or Q'ty	Part No.	SP	Description
1pc	A-8329-788-A	s	MOUNTED CIRCUIT BOARD, CN-2277
2pcs	1-560-372-00	s	TERMINAL,PRESS
1pc	1-561-514-00	o	CONNECTOR HOUSING, ILG (2P)
CN2	1-766-566-11	o	CONNECTOR, ROUND TYPE (M)(26P)
FB101	1-414-552-11	s	MICRO INDUCTOR (CHIP TYPE)
FB102	1-414-552-11	s	MICRO INDUCTOR (CHIP TYPE)
FB103	1-414-552-11	s	MICRO INDUCTOR (CHIP TYPE)
FB104	1-414-552-11	s	MICRO INDUCTOR (CHIP TYPE)
FB105	1-414-552-11	s	MICRO INDUCTOR (CHIP TYPE)
FB106	1-414-552-11	s	MICRO INDUCTOR (CHIP TYPE)
FB107	1-414-552-11	s	MICRO INDUCTOR (CHIP TYPE)
FB108	1-414-552-11	s	MICRO INDUCTOR (CHIP TYPE)
FB109	1-414-552-11	s	MICRO INDUCTOR (CHIP TYPE)
FB110	1-414-552-11	s	MICRO INDUCTOR (CHIP TYPE)
FL101	1-239-896-12	s	FILTER, EMI (SMD)
FL102	1-239-896-12	s	FILTER, EMI (SMD)
FL103	1-239-896-12	s	FILTER, EMI (SMD)
FL104	1-239-896-12	s	FILTER, EMI (SMD)
FL105	1-239-896-12	s	FILTER, EMI (SMD)
FL106	1-239-896-12	s	FILTER, EMI (SMD)
FL107	1-239-896-12	s	FILTER, EMI (SMD)

CP-315 BOARD

Ref. No. or Q'ty	Part No.	SP	Description
*1-*4:For DSR-500WS/500WSP			
*1:Serial No. 10001-10780(UC), 30001-30220(J), 40001-40370(CE)			
*2:Serial No. 10781-(UC), 30221-(J), 40371-(CE)			
*3:Serial No. 10001-12000(UC), 30001-32000(J), 40001-40850(CE)			
*4:Serial No. 12001-(UC), 32001-(J), 40851-(CE)			
1pc	A-8318-040-A	o	MOUNTED CIRCUIT BOARD, CP-315
C101	1-163-251-11	s	CERAMIC, CHIP 100PF 5% 50V
C102	1-163-251-11	s	CERAMIC, CHIP 100PF 5% 50V
C103	1-163-251-11	s	CERAMIC, CHIP 100PF 5% 50V
C104	1-163-275-11	s	CERAMIC, CHIP 0.001uF 5% 50V
C105	1-163-133-00	s	CERAMIC, CHIP 470PF 5% 50V
C106	1-163-133-00	s	CERAMIC, CHIP 470PF 5% 50V
C107	1-124-261-00	s	ELECT 10uF 20% 50V
C108	1-124-261-00	s	ELECT 10uF 20% 50V
C109	1-163-251-11	s	CERAMIC, CHIP 100PF 5% 50V
C110	1-163-251-11	s	CERAMIC, CHIP 100PF 5% 50V
C111	1-163-037-11	s	CERAMIC, CHIP 0.022uF 10% 25V
C112	1-163-037-11	s	CERAMIC, CHIP 0.022uF 10% 25V
C113	1-104-852-11	s	TANTALUM, CHIP 22uF 20% 10V
C114	1-104-852-11	s	TANTALUM, CHIP 22uF 20% 10V
C115	1-135-259-11	s	TANTALUM, CHIP 10uF 20% 6.3
C116	1-135-259-11	s	TANTALUM, CHIP 10uF 20% 6.3
C117	1-163-038-00	s	CERAMIC, CHIP 0.1uF 25V
C118	1-163-038-00	s	CERAMIC, CHIP 0.1uF 25V
C119	1-107-690-11	s	TANTALUM, CHIP 6.8uF 20% 35V
C120	1-163-251-11	s	CERAMIC, CHIP 100PF 5% 50V
C121	1-163-251-11	s	CERAMIC, CHIP 100PF 5% 50V
C122	1-163-251-11	s	CERAMIC, CHIP 100PF 5% 50V
C123	1-163-275-11	s	CERAMIC, CHIP 0.001uF 5% 50V
C124	1-107-690-11	s	TANTALUM, CHIP 6.8uF 20% 35V
C125	1-163-133-00	s	CERAMIC, CHIP 470PF 5% 50V
C126	1-163-133-00	s	CERAMIC, CHIP 470PF 5% 50V
C127	1-124-261-00	s	ELECT 10uF 20% 50V
C128	1-124-261-00	s	ELECT 10uF 20% 50V
C129	1-163-251-11	s	CERAMIC, CHIP 100PF 5% 50V
C130	1-163-251-11	s	CERAMIC, CHIP 100PF 5% 50V
C131	1-163-037-11	s	CERAMIC, CHIP 0.022uF 10% 25V
C132	1-163-037-11	s	CERAMIC, CHIP 0.022uF 10% 25V
C133	1-107-690-11	s	TANTALUM, CHIP 6.8uF 20% 35V
C134	1-107-690-11	s	TANTALUM, CHIP 6.8uF 20% 35V
C301	1-163-251-11	s	CERAMIC, CHIP 100PF 5% 50V
C302	1-163-251-11	s	CERAMIC, CHIP 100PF 5% 50V
C303	1-104-851-11	s	TANTALUM, CHIP 10uF 20% 10V
C304	1-163-037-11	s	CERAMIC, CHIP 0.022uF 10% 25V
C305	1-163-037-11	s	CERAMIC, CHIP 0.022uF 10% 25V
C306	1-104-851-11	s	TANTALUM, CHIP 10uF 20% 10V
C406	1-163-037-11	s	CERAMIC, CHIP 0.022uF 10% 25V
C413	1-163-021-91	s	CERAMIC 0.01uF 10% 50V
C414	1-128-548-11	s	ELECT 4700uF 20% 25V
C415	1-115-339-11	s	CERAMIC 0.1uF 10% 50V
CB401	⚠ 1-533-481-11	s	BREAKER, CIRCUIT
CN1	1-750-065-11	o	CONNECTOR, BOARD TO BOARD 60P
CN2	1-784-720-12	s	PIN, CONNECTOR (PC BOARD TYPE)
CN3	1-560-356-00	o	CONNECTOR POST HEADER,ILG (2P)
CN5	1-784-626-11	o	CONNECTOR, FPC (DIP TYPE) 22P
CN6	1-580-535-11	o	PIN, CONNECTOR 12P
CN7	1-580-534-11	o	PIN, CONNECTOR (PC BOARD) 10P
CN8	1-566-757-11	s	PIN, CONNECTOR (PC BOARD) 2P
CN9	1-506-703-11	o	CONNECTOR POST HEADER,ILG (4P)

(CP-315 BOARD)

Ref. No. or Q'ty	Part No.	SP	Description
CN101	1-766-386-13	s	CONNECTOR, 3P-XLR TYPE(FEMALE)
CN102	1-766-386-13	s	CONNECTOR, 3P-XLR TYPE(FEMALE)
D101	8-719-820-41	s	DIODE 1SS302
D102	8-719-820-41	s	DIODE 1SS302
D103	8-719-820-41	s	DIODE 1SS302
D104	8-719-820-41	s	DIODE 1SS302
D202	8-719-820-41	s	DIODE 1SS302
D203	8-719-820-41	s	DIODE 1SS302
D205	8-719-820-41	s	DIODE 1SS302
D206	8-719-820-41	s	DIODE 1SS302
D207	8-719-820-41	s	DIODE 1SS302
D208	8-719-820-41	s	DIODE 1SS302
D209	8-719-820-41	s	DIODE 1SS302
D210	8-719-820-41	s	DIODE 1SS302
D402	8-719-911-55	s	DIODE U05G
FL201	1-239-896-12	s	FILTER, EMI (SMD)
FL202	1-239-896-12	s	FILTER, EMI (SMD)
FL203	1-239-896-12	s	FILTER, EMI (SMD)
FL204 *1	1-239-895-11	s	FILTER, EMI (SMD)
FL205	1-239-895-11	s	FILTER, EMI (SMD)
FL206	1-239-895-11	s	FILTER, EMI (SMD)
FL207	1-239-895-11	s	FILTER, EMI (SMD)
FL208	1-239-895-11	s	FILTER, EMI (SMD)
IC101	8-759-700-84	s	IC NJM2041M-D
IC201	8-759-700-84	s	IC NJM2041M-D
IC301	8-759-385-17	s	IC NJM4580E(TE2)
L101	1-412-137-11	s	INDUCTOR 10uH
L102	1-412-137-11	s	INDUCTOR 10uH
L103	1-412-137-11	s	INDUCTOR 10uH
L104	1-412-137-11	s	INDUCTOR 10uH
M1	3-604-376-01	o	PLATE,CP
M2	1-778-787-13	o	CONNECTOR, COAXIAL (BNC TYPE)
M3	1-778-788-11	o	JACK, 2P PIN
M4	1-573-590-13	s	CONNECTOR, (S) TERMINAL 4P
M5	7-685-546-14	s	SCREW +BTP 3X8 TYPE2 N-S
PS301 ⚠	1-533-282-21	s	LINK, IC
PS401*3⚠	1-533-282-21	s	LINK, IC
*4⚠	1-576-410-21	s	FUSE, CHIP
Q101	8-729-141-75	s	TRANSISTOR 2SD596DV345
Q102	8-729-141-48	s	TRANSISTOR 2SB624-BV345
Q103	8-729-271-31	s	TRANSISTOR 2SC2713G
Q104	8-729-271-31	s	TRANSISTOR 2SC2713G
Q407	8-729-039-35	s	TRANSISTOR SI9435DY-T1
Q408	8-729-039-35	s	TRANSISTOR SI9435DY-T1
Q409	8-729-039-35	s	TRANSISTOR SI9435DY-T1
R102 *3	1-216-295-11	s	CONDUCTOR, CHIP 0
*4	1-216-017-00	s	METAL, CHIP 47 5% 1/10W
R103	1-216-295-11	s	CONDUCTOR, CHIP 0
R105	1-216-295-11	s	CONDUCTOR, CHIP 0
R106	1-208-790-11	s	METAL, CHIP 2.2K 0.50% 1/10W
R107	1-208-790-11	s	METAL, CHIP 2.2K 0.50% 1/10W
R108	1-208-790-11	s	METAL, CHIP 2.2K 0.50% 1/10W
R109	1-208-790-11	s	METAL, CHIP 2.2K 0.50% 1/10W
R110	1-208-790-11	s	METAL, CHIP 2.2K 0.50% 1/10W
R111	1-208-790-11	s	METAL, CHIP 2.2K 0.50% 1/10W
R112	1-208-768-11	s	METAL, CHIP 270 0.50% 1/10W
R113	1-208-768-11	s	METAL, CHIP 270 0.50% 1/10W
R114	1-208-770-11	s	METAL, CHIP 330 0.50% 1/10W

(CP-315 BOARD)

Ref. No. or Q'ty	Part No.	SP	Description
R115	1-208-770-11	s	METAL, CHIP 330 0.50% 1/10W
R116	1-216-295-11	s	CONDUCTOR, CHIP 0
R117	1-208-793-11	s	METAL, CHIP 3K 0.50% 1/10W
R118	1-208-818-11	s	METAL, CHIP 33K 0.50% 1/10W
R119	1-208-818-11	s	METAL, CHIP 33K 0.50% 1/10W
R120	1-208-776-11	s	METAL, CHIP 560 0.50% 1/10W
R121	1-208-778-11	s	METAL, CHIP 680 0.50% 1/10W
R122	1-208-798-11	s	METAL, CHIP 4.7K 0.50% 1/10W
R123	1-208-798-11	s	METAL, CHIP 4.7K 0.50% 1/10W
R124	1-216-295-11	s	CONDUCTOR, CHIP 0
R127	1-216-055-00	s	METAL, CHIP 1.8K 5% 1/10W
R128	1-216-055-00	s	METAL, CHIP 1.8K 5% 1/10W
R129	1-216-083-00	s	METAL, CHIP 27K 5% 1/10W
R131 *3	1-216-295-11	s	CONDUCTOR, CHIP 0
*4	1-216-017-00	s	METAL, CHIP 47 5% 1/10W
R132	1-216-295-11	s	CONDUCTOR, CHIP 0
R134	1-216-083-00	s	METAL, CHIP 27K 5% 1/10W
R135	1-216-295-11	s	CONDUCTOR, CHIP 0
R136	1-208-790-11	s	METAL, CHIP 2.2K 0.50% 1/10W
R137	1-208-790-11	s	METAL, CHIP 2.2K 0.50% 1/10W
R138	1-208-790-11	s	METAL, CHIP 2.2K 0.50% 1/10W
R139	1-208-790-11	s	METAL, CHIP 2.2K 0.50% 1/10W
R140	1-208-790-11	s	METAL, CHIP 2.2K 0.50% 1/10W
R141	1-208-790-11	s	METAL, CHIP 2.2K 0.50% 1/10W
R142	1-208-768-11	s	METAL, CHIP 270 0.50% 1/10W
R143	1-208-768-11	s	METAL, CHIP 270 0.50% 1/10W
R144	1-216-295-11	s	CONDUCTOR, CHIP 0
R145	1-208-770-11	s	METAL, CHIP 330 0.50% 1/10W
R146	1-208-770-11	s	METAL, CHIP 330 0.50% 1/10W
R147	1-208-793-11	s	METAL, CHIP 3K 0.50% 1/10W
R148	1-208-818-11	s	METAL, CHIP 33K 0.50% 1/10W
R149	1-208-818-11	s	METAL, CHIP 33K 0.50% 1/10W
R150	1-208-776-11	s	METAL, CHIP 560 0.50% 1/10W
R151	1-208-778-11	s	METAL, CHIP 680 0.50% 1/10W
R152	1-208-798-11	s	METAL, CHIP 4.7K 0.50% 1/10W
R153	1-208-798-11	s	METAL, CHIP 4.7K 0.50% 1/10W
R154	1-216-295-11	s	CONDUCTOR, CHIP 0
R201	1-216-295-11	s	CONDUCTOR, CHIP 0
R202	1-216-295-11	s	CONDUCTOR, CHIP 0
R203 *2	1-216-295-11	s	CONDUCTOR, CHIP 0
R204	1-216-295-11	s	CONDUCTOR, CHIP 0
R205	1-216-295-11	s	CONDUCTOR, CHIP 0
R206	1-216-295-11	s	CONDUCTOR, CHIP 0
R207	1-216-295-11	s	CONDUCTOR, CHIP 0
R219	1-216-023-00	s	METAL, CHIP 82 5% 1/10W
R301	1-208-798-11	s	METAL, CHIP 4.7K 0.50% 1/10W
R302	1-208-798-11	s	METAL, CHIP 4.7K 0.50% 1/10W
R303	1-216-025-11	s	METAL, CHIP 100 5% 1/10W
R304	1-216-295-11	s	CONDUCTOR, CHIP 0
R305	1-216-295-11	s	CONDUCTOR, CHIP 0
R306	1-208-781-11	s	METAL, CHIP 910 0.50% 1/10W
R307	1-216-655-11	s	METAL, CHIP 1.5K 0.50% 1/10W
R308	1-208-791-11	s	METAL, CHIP 2.4K 0.50% 1/10W
R309	1-216-655-11	s	METAL, CHIP 1.5K 0.50% 1/10W
R310	1-216-025-11	s	METAL, CHIP 100 5% 1/10W
R311	1-208-791-11	s	METAL, CHIP 2.4K 0.50% 1/10W
R312	1-216-655-11	s	METAL, CHIP 1.5K 0.50% 1/10W
R415	1-216-033-00	s	METAL, CHIP 220 5% 1/10W
R418	1-216-097-00	s	METAL, CHIP 100K 5% 1/10W
S101	1-572-042-11	s	SWITCH, SLIDE
S102	1-572-042-11	s	SWITCH, SLIDE

CP-373 BOARD

Ref. No. or Q'ty	Part No.	SP	Description
1pc	A-8329-787-A	s	MOUNTED CIRCUIT BOARD, CP-373
1pc	1-573-590-13	s	CONNECTOR, (S) TERMINAL 4P
4pcs	1-778-787-13	o	CONNECTOR, COAXIAL (BNC TYPE)
1pc	1-778-788-11	o	JACK, 2P PIN
1pc	3-604-376-01	o	PLATE,CP
3pcs	7-685-546-14	s	SCREW +BTP 3X8
1pc	A-8278-413-E	s	PLATE,CP ASSY
C101	1-163-251-11	s	CAPACITOR CERAMIC 100PF/50V
C102	1-163-251-11	s	CAPACITOR CERAMIC 100PF/50V
C103	1-163-251-11	s	CAPACITOR CERAMIC 100PF/50V
C104	1-163-275-11	s	CAPACITOR CERAMIC 1000PF/50V
C105	1-163-133-00	s	CAPACITOR,CHIP CERAMIC 470PF
C106	1-163-133-00	s	CAPACITOR,CHIP CERAMIC 470PF
C107	1-124-261-00	s	CAPACITOR,ELECT 10M/50V
C108	1-124-261-00	s	CAPACITOR,ELECT 10M/50V
C109	1-163-251-11	s	CAPACITOR CERAMIC 100PF/50V
C110	1-163-251-11	s	CAPACITOR CERAMIC 100PF/50V
C111	1-163-037-11	s	CAPACITOR,CHIP CERAMIC 0.022MF
C112	1-163-037-11	s	CAPACITOR,CHIP CERAMIC 0.022MF
C113	1-128-694-11	s	CAP, CHIP TANTALUM ELECT 22MF
C114	1-128-694-11	s	CAP, CHIP TANTALUM ELECT 22MF
C115	1-135-259-11	s	CAPACITOR,TANTALUM 10MF/6.3V
C116	1-135-259-11	s	CAPACITOR,TANTALUM 10MF/6.3V
C117	1-115-339-11	s	CAPACITOR,CERAMIC 0.1MF/50V
C118	1-115-339-11	s	CAPACITOR,CERAMIC 0.1MF/50V
C119	1-104-920-11	s	CAPACITOR TANTALUM 4.7MF/35V
C120	1-163-251-11	s	CAPACITOR CERAMIC 100PF/50V
C121	1-163-251-11	s	CAPACITOR CERAMIC 100PF/50V
C122	1-163-251-11	s	CAPACITOR CERAMIC 100PF/50V
C123	1-163-275-11	s	CAPACITOR CERAMIC 1000PF/50V
C124	1-104-920-11	s	CAPACITOR TANTALUM 4.7MF/35V
C125	1-163-133-00	s	CAPACITOR,CHIP CERAMIC 470PF
C126	1-163-133-00	s	CAPACITOR,CHIP CERAMIC 470PF
C127	1-124-261-00	s	CAPACITOR,ELECT 10M/50V
C128	1-124-261-00	s	CAPACITOR,ELECT 10M/50V
C129	1-163-251-11	s	CAPACITOR CERAMIC 100PF/50V
C130	1-163-251-11	s	CAPACITOR CERAMIC 100PF/50V
C131	1-163-037-11	s	CAPACITOR,CHIP CERAMIC 0.022MF
C132	1-163-037-11	s	CAPACITOR,CHIP CERAMIC 0.022MF
C133	1-104-920-11	s	CAPACITOR TANTALUM 4.7MF/35V
C134	1-104-920-11	s	CAPACITOR TANTALUM 4.7MF/35V
C301	1-163-251-11	s	CAPACITOR CERAMIC 100PF/50V
C302	1-163-251-11	s	CAPACITOR CERAMIC 100PF/50V
C303	1-104-851-11	s	CAPACITOR,TANTALUM 10MF/10V
C304	1-163-037-11	s	CAPACITOR,CHIP CERAMIC 0.022MF
C305	1-163-037-11	s	CAPACITOR,CHIP CERAMIC 0.022MF
C306	1-104-851-11	s	CAPACITOR,TANTALUM 10MF/10V
C406	1-163-037-11	s	CAPACITOR,CHIP CERAMIC 0.022MF
C413	1-163-021-91	s	CAPACITOR, CERAMIC 0.01MF/50V
C414	1-128-548-11	s	CAPACITOR,ELECT 4700MF/25V
C415	1-115-339-11	s	CAPACITOR,CERAMIC 0.1MF/50V
C416	1-115-339-11	s	CAPACITOR,CERAMIC 0.1MF/50V
C417	1-165-629-11	s	CAPACITOR,CERAMIC1000000PF B
C501	1-119-667-11	s	CAPACITOR CERAMIC 22MF/10V(F)
C502	1-119-667-11	s	CAPACITOR CERAMIC 22MF/10V(F)
C503	1-163-021-91	s	CAPACITOR, CERAMIC 0.01MF/50V
C504	1-127-573-11	s	CAPACITOR,CERAMIC 1MFB(2012)
C505	1-127-573-11	s	CAPACITOR,CERAMIC 1MFB(2012)

(CP-373 BOARD)

Ref. No. or Q'ty	Part No.	SP	Description
C506	1-163-021-91	s	CAPACITOR, CERAMIC 0.01MF/50V
CB401	⚠ 1-533-481-11	s	BREAKER, CIRCUIT
CN1	1-750-065-11	o	CONNECTOR, BOARD TO BOARD 60P
CN2	1-784-720-12	s	PIN, CONNECTOR (PC BOARD TYPE)
CN3	1-560-356-00	o	CONNECTOR POST HEADER,ILG (2P)
CN5	1-774-114-11	s	CONNECTOR, FPC (DIP TYPE) 24P
CN6	1-580-535-11	o	PIN, CONNECTOR (PC BOARD) 12P
CN7	1-580-534-11	o	PIN, CONNECTOR (PC BOARD) 10P
CN8	1-566-757-11	s	PIN, CONNECTOR (PC BOARD) 2P
CN9	1-506-703-11	o	CONNECTOR POST HEADER,ILG (4P)
CN10	1-560-356-00	o	CONNECTOR POST HEADER,ILG (2P)
CN101	1-766-386-14	s	CONNECTOR, 3P-XLR TYPE(FEMALE)
CN102	1-766-386-14	s	CONNECTOR, 3P-XLR TYPE(FEMALE)
D101	8-719-820-41	s	DIODE 1SS302
D102	8-719-820-41	s	DIODE 1SS302
D103	8-719-820-41	s	DIODE 1SS302
D104	8-719-820-41	s	DIODE 1SS302
D201	8-719-820-41	s	DIODE 1SS302
D202	8-719-820-41	s	DIODE 1SS302
D203	8-719-820-41	s	DIODE 1SS302
D204	8-719-820-41	s	DIODE 1SS302
D205	8-719-820-41	s	DIODE 1SS302
D206	8-719-820-41	s	DIODE 1SS302
D207	8-719-820-41	s	DIODE 1SS302
D208	8-719-820-41	s	DIODE 1SS302
D401	8-719-801-78	s	DIODE 1SS184
D402	8-719-911-55	s	DIODE U05G (RECTI)
D403	8-719-105-91	s	DIODE RD5.6M-B2
D404	8-719-801-78	s	DIODE 1SS184
D501	8-719-820-41	s	DIODE 1SS302
D502	8-719-024-81	s	DIODE 1SS300-TE85L
D503	8-719-820-41	s	DIODE 1SS302
FL201	1-239-896-12	s	FILTER, EMI (SMD)
FL202	1-239-896-12	s	FILTER, EMI (SMD)
FL203	1-239-896-12	s	FILTER, EMI (SMD)
FL204	1-239-895-11	s	FILTER, EMI (SMD)
FL205	1-239-895-11	s	FILTER, EMI (SMD)
FL206	1-239-895-11	s	FILTER, EMI (SMD)
FL207	1-239-895-11	s	FILTER, EMI (SMD)
FL208	1-239-895-11	s	FILTER, EMI (SMD)
IC101	8-759-700-84	s	IC NJM2041MD
IC201	8-759-700-84	s	IC NJM2041MD
IC301	8-759-385-17	s	IC NJM4580E (TE2)
IC501	8-759-702-02	s	IC NJM062M
IC502	8-759-242-64	s	IC TC4W53F
IC503	8-759-702-02	s	IC NJM062M
IC504	8-759-242-64	s	IC TC4W53F
L101	1-412-137-11	s	INDUCTOR,MICRO 10UH
L102	1-412-137-11	s	INDUCTOR,MICRO 10UH
L103	1-412-137-11	s	INDUCTOR,MICRO 10UH
L104	1-412-137-11	s	INDUCTOR,MICRO 10UH
PS301	⚠ 1-533-282-21	s	CIRCUIT PROTECTOR 2A (3225)
PS401	⚠ 1-576-410-21	s	FUSE, CHIP 2A/63V
Q101	8-729-159-65	s	TRANSISTOR 2SD596-DV5
Q102	8-729-162-45	s	TRANSISTOR 2SB624-BV5

(CP-373 BOARD)

Ref. No. or Q'ty	Part No.	SP	Description
Q103	8-729-271-31	s	TRANSISTOR 2SC2713-G
Q104	8-729-271-31	s	TRANSISTOR 2SC2713-G
Q401	6-550-062-01	s	TRANSISTOR SI4835DY-T1
Q402	6-550-062-01	s	TRANSISTOR SI4835DY-T1
Q403	6-550-062-01	s	TRANSISTOR SI4835DY-T1
Q404	6-550-062-01	s	TRANSISTOR SI4835DY-T1
Q407	6-550-062-01	s	TRANSISTOR SI4835DY-T1
Q408	6-550-062-01	s	TRANSISTOR SI4835DY-T1
Q409	8-729-905-35	s	TRANSISTOR 2SC4081-R
Q410	8-729-905-35	s	TRANSISTOR 2SC4081-R
Q411	6-550-062-01	s	TRANSISTOR SI4835DY-T1
Q412	6-550-062-01	s	TRANSISTOR SI4835DY-T1
Q413	6-550-062-01	s	TRANSISTOR SI4835DY-T1
Q414	6-550-062-01	s	TRANSISTOR SI4835DY-T1
Q415	8-729-905-35	s	TRANSISTOR 2SC4081-R
Q416	8-729-905-35	s	TRANSISTOR 2SC4081-R
Q501	8-729-026-53	s	TRANSISTOR 2SA1576A-T106-QR
Q502	8-729-026-53	s	TRANSISTOR 2SA1576A-T106-QR
Q503	8-729-026-53	s	TRANSISTOR 2SA1576A-T106-QR
Q504	8-729-905-35	s	TRANSISTOR 2SC4081-R
R102	1-216-295-91	s	CONDUCTOR, CHIP (2012)
R103	1-216-295-91	s	CONDUCTOR, CHIP (2012)
R105	1-216-295-91	s	CONDUCTOR, CHIP (2012)
R106	1-208-790-11	s	RESISTOR,CHIP 2.2K 1/10W(2012)
R107	1-208-790-11	s	RESISTOR,CHIP 2.2K 1/10W(2012)
R108	1-208-790-11	s	RESISTOR,CHIP 2.2K 1/10W(2012)
R109	1-208-790-11	s	RESISTOR,CHIP 2.2K 1/10W(2012)
R110	1-208-790-11	s	RESISTOR,CHIP 2.2K 1/10W(2012)
R111	1-208-790-11	s	RESISTOR,CHIP 2.2K 1/10W(2012)
R112	1-208-768-11	s	RESISTOR,CHIP 270 1/10W (2012)
R113	1-208-768-11	s	RESISTOR,CHIP 270 1/10W (2012)
R114	1-208-770-11	s	RESISTOR,CHIP 330 1/10W (2012)
R115	1-208-770-11	s	RESISTOR,CHIP 330 1/10W (2012)
R116	1-216-295-91	s	CONDUCTOR, CHIP (2012)
R117	1-208-793-11	s	RESISTOR,CHIP 3K 1/10W (2125)
R118	1-208-818-11	s	RESISTOR,CHIP 33K 1/10W (2012)
R119	1-208-818-11	s	RESISTOR,CHIP 33K 1/10W (2012)
R120	1-208-776-11	s	RESISTOR,CHIP 560 1/10W (2012)
R121	1-208-778-11	s	RESISTOR,CHIP 680 1/10W (2012)
R122	1-208-798-11	s	RESISTOR,CHIP 4.7K 1/10W(2012)
R123	1-208-798-11	s	RESISTOR,CHIP 4.7K 1/10W(2012)
R124	1-216-295-91	s	CONDUCTOR, CHIP (2012)
R127	1-216-055-00	s	RESISTOR CHIP 1.8K 1/10W(2012)
R128	1-216-055-00	s	RESISTOR CHIP 1.8K 1/10W(2012)
R129	1-216-685-11	s	RESISTOR,CHIP 27K 1/10W(2012)
R131	1-216-295-91	s	CONDUCTOR, CHIP (2012)
R132	1-216-295-91	s	CONDUCTOR, CHIP (2012)
R134	1-216-685-11	s	RESISTOR,CHIP 27K 1/10W(2012)
R135	1-216-295-91	s	CONDUCTOR, CHIP (2012)
R136	1-208-790-11	s	RESISTOR,CHIP 2.2K 1/10W(2012)
R137	1-208-790-11	s	RESISTOR,CHIP 2.2K 1/10W(2012)
R138	1-208-790-11	s	RESISTOR,CHIP 2.2K 1/10W(2012)
R139	1-208-790-11	s	RESISTOR,CHIP 2.2K 1/10W(2012)
R140	1-208-790-11	s	RESISTOR,CHIP 2.2K 1/10W(2012)
R141	1-208-790-11	s	RESISTOR,CHIP 2.2K 1/10W(2012)
R142	1-208-768-11	s	RESISTOR,CHIP 270 1/10W (2012)
R143	1-208-768-11	s	RESISTOR,CHIP 270 1/10W (2012)
R144	1-208-770-11	s	RESISTOR,CHIP 330 1/10W (2012)
R145	1-208-770-11	s	RESISTOR,CHIP 330 1/10W (2012)

(CP-373 BOARD)

Ref. No. or Q'ty	Part No.	SP	Description
R146	1-216-295-91	s	CONDUCTOR, CHIP (2012)
R147	1-208-793-11	s	RESISTOR,CHIP 3K 1/10W (2125)
R148	1-208-818-11	s	RESISTOR,CHIP 33K 1/10W (2012)
R149	1-208-818-11	s	RESISTOR,CHIP 33K 1/10W (2012)
R150	1-208-776-11	s	RESISTOR,CHIP 560 1/10W (2012)
R151	1-208-778-11	s	RESISTOR,CHIP 680 1/10W (2012)
R152	1-208-798-11	s	RESISTOR,CHIP 4.7K 1/10W(2012)
R153	1-208-798-11	s	RESISTOR,CHIP 4.7K 1/10W(2012)
R154	1-216-295-91	s	CONDUCTOR, CHIP (2012)
R205	1-216-295-91	s	CONDUCTOR, CHIP (2012)
R301	1-208-798-11	s	RESISTOR,CHIP 4.7K 1/10W(2012)
R302	1-208-798-11	s	RESISTOR,CHIP 4.7K 1/10W(2012)
R303	1-208-758-11	s	RESISTOR,CHIP 100 1/10W (2012)
R306	1-208-781-11	s	RESISTOR,CHIP 910 1/10W (2125)
R307	1-216-053-00	s	RESISTOR CHIP 1.5K 1/10W(2012)
R308	1-216-660-11	s	RESISTOR,CHIP 2.4K 1/10W(2012)
R309	1-216-053-00	s	RESISTOR CHIP 1.5K 1/10W(2012)
R310	1-216-025-00	s	RESISTOR,CHIP 100 1/10W(2012)
R311	1-216-660-11	s	RESISTOR,CHIP 2.4K 1/10W(2012)
R312	1-216-053-00	s	RESISTOR CHIP 1.5K 1/10W(2012)
R313	1-216-049-11	s	RESISTOR, CHIP 1K 1/10W(2012)
R401	1-216-105-91	s	RESISTOR,CHIP 220K 1/10W(2125)
R402	1-216-097-00	s	RESISTOR CHIP 100K 1/10W(2012)
R403	1-216-097-00	s	RESISTOR CHIP 100K 1/10W(2012)
R404	1-216-085-00	s	RESISTOR CHIP 33K 1/10W(2012)
R405	1-216-081-00	s	RESISTOR,CHIP 22K 1/10W(2012)
R406	1-216-105-91	s	RESISTOR,CHIP 220K 1/10W(2125)
R415	1-216-085-00	s	RESISTOR CHIP 33K 1/10W(2012)
R418	1-216-097-00	s	RESISTOR CHIP 100K 1/10W(2012)
R422	1-216-089-91	s	RESISTOR, CHIP 47K 1/10W(2012)
R423	1-216-097-00	s	RESISTOR CHIP 100K 1/10W(2012)
R424	1-216-077-00	s	RESISTOR,CHIP 15K 1/10W(2012)
R425	1-216-081-00	s	RESISTOR,CHIP 22K 1/10W(2012)
R426	1-216-097-00	s	RESISTOR CHIP 100K 1/10W(2012)
R427	1-216-025-00	s	RESISTOR,CHIP 100 1/10W(2012)
R428	1-216-689-11	s	RESISTOR,CHIP 39K 1/10W(2012)
R429	1-216-073-00	s	RESISTOR,CHIP 10K 1/10W(2012)
R502	1-216-025-00	s	RESISTOR,CHIP 100 1/10W(2012)
R503	1-208-798-11	s	RESISTOR,CHIP 4.7K 1/10W(2012)
R504	1-208-798-11	s	RESISTOR,CHIP 4.7K 1/10W(2012)
R505	1-216-025-00	s	RESISTOR,CHIP 100 1/10W(2012)
R506	1-216-025-00	s	RESISTOR,CHIP 100 1/10W(2012)
R507	1-216-022-00	s	RESISTOR,CHIP 75 1/10W (2125)
R508	1-216-089-91	s	RESISTOR, CHIP 47K 1/10W(2012)
R509	1-216-061-00	s	RESISTOR CHIP 3.3K 1/10W(2012)
R510	1-216-109-00	s	RESISTOR CHIP 330K 1/10W(2012)
R511	1-216-089-91	s	RESISTOR, CHIP 47K 1/10W(2012)
R512	1-216-089-91	s	RESISTOR, CHIP 47K 1/10W(2012)
R514	1-216-025-00	s	RESISTOR,CHIP 100 1/10W(2012)
R515	1-208-798-11	s	RESISTOR,CHIP 4.7K 1/10W(2012)
R516	1-216-025-00	s	RESISTOR,CHIP 100 1/10W(2012)
R517	1-216-061-00	s	RESISTOR CHIP 3.3K 1/10W(2012)
R518	1-216-089-91	s	RESISTOR, CHIP 47K 1/10W(2012)
R519	1-216-109-00	s	RESISTOR CHIP 330K 1/10W(2012)
R520	1-216-089-91	s	RESISTOR, CHIP 47K 1/10W(2012)
R521	1-216-089-91	s	RESISTOR, CHIP 47K 1/10W(2012)
R522	1-208-798-11	s	RESISTOR,CHIP 4.7K 1/10W(2012)
R523	1-216-022-00	s	RESISTOR,CHIP 75 1/10W (2125)

(CP-373 BOARD)

Ref. No. or Q'ty	Part No.	SP	Description
S101	1-572-042-11	s	SWITCH,SLIDE (2-4-3)
S102	1-572-042-11	s	SWITCH,SLIDE (2-4-3)

DPR-141 BOARD suffix 13 and higher

Ref. No. or Q'ty	Part No.	SP	Description
			*1,*2:For DSR-500WS/500WSP
			*1:Serial No. 12641-12812(UC), 32206-32207(J), 43556-45010(CE)
			*2:Serial No. 12813-(UC), 32208-(J), 45011-(CE)
1pc	A-8322-183-A	s	MOUNTED CIRCUIT BOARD, DPR-141
5pcs	3-729-013-41	s	SCREW(M1.4X3.5),WASHERHEAD(+P)
4pcs	7-622-205-05	s	NUT M2 TYPE2
4pcs	7-628-253-20	s	SCREW +PS 2X6
C101	1-164-156-11	s	CAPACITOR,CERAMIC 0.1MF/25V F
C102	1-164-156-11	s	CAPACITOR,CERAMIC 0.1MF/25V F
C103	1-164-156-11	s	CAPACITOR,CERAMIC 0.1MF/25V F
C104	1-164-156-11	s	CAPACITOR,CERAMIC 0.1MF/25V F
C105	1-164-156-11	s	CAPACITOR,CERAMIC 0.1MF/25V F
C106	1-104-912-11	s	CAPACITOR TANTALUM 3.3MF/16V
C107	1-107-689-21	s	CAPACITOR,TANTALUM 1MF/35V
C108	1-104-823-11	s	CAPACITOR,TANTALUM 47MF/16V
C109	1-164-156-11	s	CAPACITOR,CERAMIC 0.1MF/25V F
C110	1-104-912-11	s	CAPACITOR TANTALUM 3.3MF/16V
C111	1-113-682-11	s	CAPACITOR,TANTALUM 33MF/10V
C112	1-164-156-11	s	CAPACITOR,CERAMIC 0.1MF/25V F
C113	1-164-156-11	s	CAPACITOR,CERAMIC 0.1MF/25V F
C114	1-164-156-11	s	CAPACITOR,CERAMIC 0.1MF/25V F
C115	1-164-156-11	s	CAPACITOR,CERAMIC 0.1MF/25V F
C116	1-104-912-11	s	CAPACITOR TANTALUM 3.3MF/16V
C117	1-104-912-11	s	CAPACITOR TANTALUM 3.3MF/16V
C118	1-113-682-11	s	CAPACITOR,TANTALUM 33MF/10V
C119	1-113-682-11	s	CAPACITOR,TANTALUM 33MF/10V
C120	1-135-177-21	s	CAPACITOR TANTALUM 1MF/25V
C121	1-135-177-21	s	CAPACITOR TANTALUM 1MF/25V
C122	1-164-156-11	s	CAPACITOR,CERAMIC 0.1MF/25V F
C123	1-104-851-11	s	CAPACITOR,TANTALUM 10MF/10V
C124	1-164-156-11	s	CAPACITOR,CERAMIC 0.1MF/25V F
C125	1-164-156-11	s	CAPACITOR,CERAMIC 0.1MF/25V F
C131	1-164-156-11	s	CAPACITOR,CERAMIC 0.1MF/25V F
C133	1-164-156-11	s	CAPACITOR,CERAMIC 0.1MF/25V F
C134	1-162-921-11	s	CAPACITOR,CERAMIC 33PF/50V CH
C135	1-113-682-11	s	CAPACITOR,TANTALUM 33MF/10V
C136	1-164-156-11	s	CAPACITOR,CERAMIC 0.1MF/25V F
C137	1-107-686-11	s	CAPACITOR,TANTALUM 4.7MF/16V
C138	1-164-156-11	s	CAPACITOR,CERAMIC 0.1MF/25V F
C139	1-107-686-11	s	CAPACITOR,TANTALUM 4.7MF/16V
C140	1-164-156-11	s	CAPACITOR,CERAMIC 0.1MF/25V F
C141	1-164-156-11	s	CAPACITOR,CERAMIC 0.1MF/25V F
C142	1-164-156-11	s	CAPACITOR,CERAMIC 0.1MF/25V F
C143	1-164-156-11	s	CAPACITOR,CERAMIC 0.1MF/25V F
C144	1-164-156-11	s	CAPACITOR,CERAMIC 0.1MF/25V F
C145	1-110-569-21	s	CAPACITOR CHIP TANTAL47MF/6.3V
C146	1-162-921-11	s	CAPACITOR,CERAMIC 33PF/50V CH
C147	1-113-682-11	s	CAPACITOR,TANTALUM 33MF/10V
C148	1-164-156-11	s	CAPACITOR,CERAMIC 0.1MF/25V F
C149	1-107-686-11	s	CAPACITOR,TANTALUM 4.7MF/16V
C150	1-164-156-11	s	CAPACITOR,CERAMIC 0.1MF/25V F
C151	1-107-686-11	s	CAPACITOR,TANTALUM 4.7MF/16V
C152	1-164-156-11	s	CAPACITOR,CERAMIC 0.1MF/25V F
C153	1-164-156-11	s	CAPACITOR,CERAMIC 0.1MF/25V F
C154	1-164-156-11	s	CAPACITOR,CERAMIC 0.1MF/25V F
C155	1-164-156-11	s	CAPACITOR,CERAMIC 0.1MF/25V F
C156	1-164-156-11	s	CAPACITOR,CERAMIC 0.1MF/25V F
C157	1-110-569-21	s	CAPACITOR CHIP TANTAL47MF/6.3V

(DPR-141 BOARD suffix 13 and higher)

Ref. No. or Q'ty	Part No.	SP	Description
C158	1-162-921-11	s	CAPACITOR,CERAMIC 33PF/50V CH
C159	1-113-682-11	s	CAPACITOR,TANTALUM 33MF/10V
C160	1-164-156-11	s	CAPACITOR,CERAMIC 0.1MF/25V F
C161	1-107-686-11	s	CAPACITOR,TANTALUM 4.7MF/16V
C162	1-164-156-11	s	CAPACITOR,CERAMIC 0.1MF/25V F
C163	1-107-686-11	s	CAPACITOR,TANTALUM 4.7MF/16V
C164	1-164-156-11	s	CAPACITOR,CERAMIC 0.1MF/25V F
C165	1-164-156-11	s	CAPACITOR,CERAMIC 0.1MF/25V F
C166	1-164-156-11	s	CAPACITOR,CERAMIC 0.1MF/25V F
C167	1-164-156-11	s	CAPACITOR,CERAMIC 0.1MF/25V F
C168	1-164-156-11	s	CAPACITOR,CERAMIC 0.1MF/25V F
C169	1-110-569-21	s	CAPACITOR CHIP TANTAL47MF/6.3V
C201	1-164-156-11	s	CAPACITOR,CERAMIC 0.1MF/25V F
C202	1-110-569-21	s	CAPACITOR CHIP TANTAL47MF/6.3V
C204	1-164-156-11	s	CAPACITOR,CERAMIC 0.1MF/25V F
C209	1-113-682-11	s	CAPACITOR,TANTALUM 33MF/10V
C210	1-113-682-11	s	CAPACITOR,TANTALUM 33MF/10V
C211	1-164-156-11	s	CAPACITOR,CERAMIC 0.1MF/25V F
C212	1-164-156-11	s	CAPACITOR,CERAMIC 0.1MF/25V F
C213	1-164-156-11	s	CAPACITOR,CERAMIC 0.1MF/25V F
C214	1-164-156-11	s	CAPACITOR,CERAMIC 0.1MF/25V F
C215	1-164-156-11	s	CAPACITOR,CERAMIC 0.1MF/25V F
C216	1-164-156-11	s	CAPACITOR,CERAMIC 0.1MF/25V F
C220	1-164-156-11	s	CAPACITOR,CERAMIC 0.1MF/25V F
C221	1-113-682-11	s	CAPACITOR,TANTALUM 33MF/10V
C222	1-113-682-11	s	CAPACITOR,TANTALUM 33MF/10V
C223	1-113-682-11	s	CAPACITOR,TANTALUM 33MF/10V
C224	1-104-851-11	s	CAPACITOR,TANTALUM 10MF/10V
C225	1-104-851-11	s	CAPACITOR,TANTALUM 10MF/10V
C226	1-104-851-11	s	CAPACITOR,TANTALUM 10MF/10V
C227	*2 1-162-925-11	s	CAPACITOR,CERAMIC 68PF/50V CH
C229	*1 1-162-919-11	s	CAPACITOR,CERAMIC 22PF/50V CH
C231	1-164-156-11	s	CAPACITOR,CERAMIC 0.1MF/25V F
C232	1-164-156-11	s	CAPACITOR,CERAMIC 0.1MF/25V F
C233	1-164-156-11	s	CAPACITOR,CERAMIC 0.1MF/25V F
C234	1-164-156-11	s	CAPACITOR,CERAMIC 0.1MF/25V F
C235	1-110-569-21	s	CAPACITOR CHIP TANTAL47MF/6.3V
C236	1-110-569-21	s	CAPACITOR CHIP TANTAL47MF/6.3V
C237	1-110-569-21	s	CAPACITOR CHIP TANTAL47MF/6.3V
C238	1-164-156-11	s	CAPACITOR,CERAMIC 0.1MF/25V F
C239	1-164-156-11	s	CAPACITOR,CERAMIC 0.1MF/25V F
C240	1-110-569-21	s	CAPACITOR CHIP TANTAL47MF/6.3V
C241	1-164-156-11	s	CAPACITOR,CERAMIC 0.1MF/25V F
C242	1-164-156-11	s	CAPACITOR,CERAMIC 0.1MF/25V F
C243	1-164-156-11	s	CAPACITOR,CERAMIC 0.1MF/25V F
C244	1-164-156-11	s	CAPACITOR,CERAMIC 0.1MF/25V F
C245	1-164-156-11	s	CAPACITOR,CERAMIC 0.1MF/25V F
C246	1-164-156-11	s	CAPACITOR,CERAMIC 0.1MF/25V F
C247	1-164-156-11	s	CAPACITOR,CERAMIC 0.1MF/25V F
C248	1-110-569-21	s	CAPACITOR CHIP TANTAL47MF/6.3V
C249	1-110-569-21	s	CAPACITOR CHIP TANTAL47MF/6.3V
C250	1-164-156-11	s	CAPACITOR,CERAMIC 0.1MF/25V F
C251	1-110-569-21	s	CAPACITOR CHIP TANTAL47MF/6.3V
C252	1-110-569-21	s	CAPACITOR CHIP TANTAL47MF/6.3V
C253	1-162-919-11	s	CAPACITOR,CERAMIC 22PF/50V CH
C255	1-162-962-11	s	CAPACITOR,CERAMIC 470PF/50V(B)
C256	1-162-962-11	s	CAPACITOR,CERAMIC 470PF/50V(B)
C257	1-164-156-11	s	CAPACITOR,CERAMIC 0.1MF/25V F
C258	1-164-156-11	s	CAPACITOR,CERAMIC 0.1MF/25V F

(DPR-141 BOARD suffix 13 and higher)

Ref. No. or Q'ty	Part No.	SP	Description
C301	1-110-569-21	s	CAPACITOR CHIP TANTAL47MF/6.3V
C302	1-164-156-11	s	CAPACITOR,CERAMIC 0.1MF/25V F
C303	1-164-156-11	s	CAPACITOR,CERAMIC 0.1MF/25V F
C304	1-113-682-11	s	CAPACITOR,TANTALUM 33MF/10V
C305	1-164-156-11	s	CAPACITOR,CERAMIC 0.1MF/25V F
C306	1-164-156-11	s	CAPACITOR,CERAMIC 0.1MF/25V F
C307	1-164-156-11	s	CAPACITOR,CERAMIC 0.1MF/25V F
C308	1-164-156-11	s	CAPACITOR,CERAMIC 0.1MF/25V F
C309	1-162-968-11	s	CAPACITOR,CERAMIC 4700PF/50V B
C310	1-164-156-11	s	CAPACITOR,CERAMIC 0.1MF/25V F
C311	1-162-966-11	s	CAPACITOR,CERAMIC 2200PF/50V B
C312	1-162-923-11	s	CAPACITOR,CERAMIC 47PF/50V CH
C313	1-162-923-11	s	CAPACITOR,CERAMIC 47PF/50V CH
C314	1-164-156-11	s	CAPACITOR,CERAMIC 0.1MF/25V F
C315	1-164-156-11	s	CAPACITOR,CERAMIC 0.1MF/25V F
C316	1-164-156-11	s	CAPACITOR,CERAMIC 0.1MF/25V F
C317	1-164-156-11	s	CAPACITOR,CERAMIC 0.1MF/25V F
C318	1-164-156-11	s	CAPACITOR,CERAMIC 0.1MF/25V F
C319	1-113-682-11	s	CAPACITOR,TANTALUM 33MF/10V
C320	1-164-156-11	s	CAPACITOR,CERAMIC 0.1MF/25V F
C321	1-113-682-11	s	CAPACITOR,TANTALUM 33MF/10V
C322	1-164-156-11	s	CAPACITOR,CERAMIC 0.1MF/25V F
C323	1-164-156-11	s	CAPACITOR,CERAMIC 0.1MF/25V F
C324	1-164-156-11	s	CAPACITOR,CERAMIC 0.1MF/25V F
C325	1-162-910-11	s	CAPACITOR,CERAMIC 5PF/50V 1608
C326	1-164-156-11	s	CAPACITOR,CERAMIC 0.1MF/25V F
C327	1-164-156-11	s	CAPACITOR,CERAMIC 0.1MF/25V F
C328	1-162-915-11	s	CAPACITOR,CERAMIC 10PF/50V CH
C330	1-164-156-11	s	CAPACITOR,CERAMIC 0.1MF/25V F
C331	1-162-920-11	s	CAPACITOR,CERAMIC 27PF/50V CH
C333	1-164-156-11	s	CAPACITOR,CERAMIC 0.1MF/25V F
C334	1-162-910-11	s	CAPACITOR,CERAMIC 5PF/50V 1608
C335	1-164-156-11	s	CAPACITOR,CERAMIC 0.1MF/25V F
C336	1-164-156-11	s	CAPACITOR,CERAMIC 0.1MF/25V F
C337	1-162-915-11	s	CAPACITOR,CERAMIC 10PF/50V CH
C339	1-164-156-11	s	CAPACITOR,CERAMIC 0.1MF/25V F
C340	1-162-920-11	s	CAPACITOR,CERAMIC 27PF/50V CH
C342	1-113-682-11	s	CAPACITOR,TANTALUM 33MF/10V
C343	1-113-682-11	s	CAPACITOR,TANTALUM 33MF/10V
C344	1-162-910-11	s	CAPACITOR,CERAMIC 5PF/50V 1608
C345	1-164-156-11	s	CAPACITOR,CERAMIC 0.1MF/25V F
C346	1-164-156-11	s	CAPACITOR,CERAMIC 0.1MF/25V F
C347	1-162-915-11	s	CAPACITOR,CERAMIC 10PF/50V CH
C349	1-164-156-11	s	CAPACITOR,CERAMIC 0.1MF/25V F
C350	1-162-920-11	s	CAPACITOR,CERAMIC 27PF/50V CH
C352	1-164-156-11	s	CAPACITOR,CERAMIC 0.1MF/25V F
C353	1-164-156-11	s	CAPACITOR,CERAMIC 0.1MF/25V F
C354	1-164-156-11	s	CAPACITOR,CERAMIC 0.1MF/25V F
C355	1-164-156-11	s	CAPACITOR,CERAMIC 0.1MF/25V F
C357	1-164-156-11	s	CAPACITOR,CERAMIC 0.1MF/25V F
C358	1-164-156-11	s	CAPACITOR,CERAMIC 0.1MF/25V F
C359	1-110-569-21	s	CAPACITOR CHIP TANTAL47MF/6.3V
C360	1-164-156-11	s	CAPACITOR,CERAMIC 0.1MF/25V F
C361	1-110-569-21	s	CAPACITOR CHIP TANTAL47MF/6.3V
C362	1-164-156-11	s	CAPACITOR,CERAMIC 0.1MF/25V F
C363	1-110-569-21	s	CAPACITOR CHIP TANTAL47MF/6.3V
C364	1-164-156-11	s	CAPACITOR,CERAMIC 0.1MF/25V F
C365	1-110-569-21	s	CAPACITOR CHIP TANTAL47MF/6.3V
C366	1-164-156-11	s	CAPACITOR,CERAMIC 0.1MF/25V F

(DPR-141 BOARD suffix 13 and higher)

Ref. No. or Q'ty	Part No.	SP	Description
C367	1-110-569-21	s	CAPACITOR CHIP TANTAL47MF/6.3V
C368	1-164-156-11	s	CAPACITOR,CERAMIC 0.1MF/25V F
C369	1-110-569-21	s	CAPACITOR CHIP TANTAL47MF/6.3V
C370	1-164-156-11	s	CAPACITOR,CERAMIC 0.1MF/25V F
C371	1-110-569-21	s	CAPACITOR CHIP TANTAL47MF/6.3V
C372	1-164-156-11	s	CAPACITOR,CERAMIC 0.1MF/25V F
C373	1-110-569-21	s	CAPACITOR CHIP TANTAL47MF/6.3V
C374	1-113-682-11	s	CAPACITOR,TANTALUM 33MF/10V
C375	1-113-682-11	s	CAPACITOR,TANTALUM 33MF/10V
C376	1-164-156-11	s	CAPACITOR,CERAMIC 0.1MF/25V F
C377	1-164-156-11	s	CAPACITOR,CERAMIC 0.1MF/25V F
C378	1-164-156-11	s	CAPACITOR,CERAMIC 0.1MF/25V F
C379	1-164-156-11	s	CAPACITOR,CERAMIC 0.1MF/25V F
C380	1-107-685-11	s	CAPACITOR TANTALUM 15MF/6.3V
C381	1-164-156-11	s	CAPACITOR,CERAMIC 0.1MF/25V F
C382	1-164-156-11	s	CAPACITOR,CERAMIC 0.1MF/25V F
C383	1-113-682-11	s	CAPACITOR,TANTALUM 33MF/10V
C384	1-164-156-11	s	CAPACITOR,CERAMIC 0.1MF/25V F
C385	1-164-156-11	s	CAPACITOR,CERAMIC 0.1MF/25V F
C386	1-113-682-11	s	CAPACITOR,TANTALUM 33MF/10V
C387	1-164-156-11	s	CAPACITOR,CERAMIC 0.1MF/25V F
C388	1-164-156-11	s	CAPACITOR,CERAMIC 0.1MF/25V F
C389	1-164-156-11	s	CAPACITOR,CERAMIC 0.1MF/25V F
C390	1-162-923-11	s	CAPACITOR,CERAMIC 47PF/50V CH
C391	1-104-851-11	s	CAPACITOR,TANTALUM 10MF/10V
C392	1-164-156-11	s	CAPACITOR,CERAMIC 0.1MF/25V F
C393	1-164-156-11	s	CAPACITOR,CERAMIC 0.1MF/25V F
C394	1-164-156-11	s	CAPACITOR,CERAMIC 0.1MF/25V F
C395	1-164-156-11	s	CAPACITOR,CERAMIC 0.1MF/25V F
C396	1-164-156-11	s	CAPACITOR,CERAMIC 0.1MF/25V F
C397	1-164-156-11	s	CAPACITOR,CERAMIC 0.1MF/25V F
C398	1-164-156-11	s	CAPACITOR,CERAMIC 0.1MF/25V F
C399	1-164-156-11	s	CAPACITOR,CERAMIC 0.1MF/25V F
C400	1-164-156-11	s	CAPACITOR,CERAMIC 0.1MF/25V F
C401	1-113-682-11	s	CAPACITOR,TANTALUM 33MF/10V
C402	1-113-682-11	s	CAPACITOR,TANTALUM 33MF/10V
C403	1-164-156-11	s	CAPACITOR,CERAMIC 0.1MF/25V F
C404	1-164-156-11	s	CAPACITOR,CERAMIC 0.1MF/25V F
C408	1-162-919-11	s	CAPACITOR,CERAMIC 22PF/50V CH
C501	1-164-156-11	s	CAPACITOR,CERAMIC 0.1MF/25V F
C502	1-164-156-11	s	CAPACITOR,CERAMIC 0.1MF/25V F
C503	1-164-156-11	s	CAPACITOR,CERAMIC 0.1MF/25V F
C504	1-164-156-11	s	CAPACITOR,CERAMIC 0.1MF/25V F
C507	1-164-315-11	s	CAPACITOR,CERAMIC 470PF/50V CH
C508	1-162-964-11	s	CAPACITOR,CERAMIC 1000PF/50V B
C509	1-162-922-11	s	CAPACITOR,CERAMIC 39PF/50V CH
C510	1-162-964-11	s	CAPACITOR,CERAMIC 1000PF/50V B
C511	1-162-964-11	s	CAPACITOR,CERAMIC 1000PF/50V B
C512	1-113-682-11	s	CAPACITOR,TANTALUM 33MF/10V
C513	1-164-156-11	s	CAPACITOR,CERAMIC 0.1MF/25V F
C514	1-164-156-11	s	CAPACITOR,CERAMIC 0.1MF/25V F
C515	1-113-682-11	s	CAPACITOR,TANTALUM 33MF/10V
C516	1-164-156-11	s	CAPACITOR,CERAMIC 0.1MF/25V F
C517	1-164-156-11	s	CAPACITOR,CERAMIC 0.1MF/25V F
C518	1-164-156-11	s	CAPACITOR,CERAMIC 0.1MF/25V F
C521	1-164-156-11	s	CAPACITOR,CERAMIC 0.1MF/25V F
C522	1-110-569-21	s	CAPACITOR CHIP TANTAL47MF/6.3V
C523	1-164-156-11	s	CAPACITOR,CERAMIC 0.1MF/25V F
C524	1-164-156-11	s	CAPACITOR,CERAMIC 0.1MF/25V F

(DPR-141 BOARD suffix 13 and higher)

Ref. No. or Q'ty	Part No.	SP	Description
C527	1-164-156-11	s	CAPACITOR,CERAMIC 0.1MF/25V F
C528	1-164-156-11	s	CAPACITOR,CERAMIC 0.1MF/25V F
C529	1-164-315-11	s	CAPACITOR,CERAMIC 470PF/50V CH
C530	1-164-156-11	s	CAPACITOR,CERAMIC 0.1MF/25V F
C531	1-164-156-11	s	CAPACITOR,CERAMIC 0.1MF/25V F
C532	1-110-569-21	s	CAPACITOR CHIP TANTAL47MF/6.3V
C534	1-164-156-11	s	CAPACITOR,CERAMIC 0.1MF/25V F
C535	1-164-156-11	s	CAPACITOR,CERAMIC 0.1MF/25V F
C536	1-164-156-11	s	CAPACITOR,CERAMIC 0.1MF/25V F
C537	1-164-156-11	s	CAPACITOR,CERAMIC 0.1MF/25V F
C539	1-164-156-11	s	CAPACITOR,CERAMIC 0.1MF/25V F
C546	1-164-156-11	s	CAPACITOR,CERAMIC 0.1MF/25V F
C547	1-164-156-11	s	CAPACITOR,CERAMIC 0.1MF/25V F
C548	1-162-922-11	s	CAPACITOR,CERAMIC 39PF/50V CH
C549	1-162-922-11	s	CAPACITOR,CERAMIC 39PF/50V CH
C601	1-164-156-11	s	CAPACITOR,CERAMIC 0.1MF/25V F
C603	1-110-569-21	s	CAPACITOR CHIP TANTAL47MF/6.3V
C604	1-164-156-11	s	CAPACITOR,CERAMIC 0.1MF/25V F
C605	1-164-315-11	s	CAPACITOR,CERAMIC 470PF/50V CH
C606	1-164-315-11	s	CAPACITOR,CERAMIC 470PF/50V CH
C611	1-164-156-11	s	CAPACITOR,CERAMIC 0.1MF/25V F
C612	1-164-156-11	s	CAPACITOR,CERAMIC 0.1MF/25V F
C613	1-164-156-11	s	CAPACITOR,CERAMIC 0.1MF/25V F
C614	1-110-569-21	s	CAPACITOR CHIP TANTAL47MF/6.3V
C615	1-164-156-11	s	CAPACITOR,CERAMIC 0.1MF/25V F
C621	1-110-569-21	s	CAPACITOR CHIP TANTAL47MF/6.3V
C622	1-164-156-11	s	CAPACITOR,CERAMIC 0.1MF/25V F
C623	1-164-156-11	s	CAPACITOR,CERAMIC 0.1MF/25V F
C631	1-110-569-21	s	CAPACITOR CHIP TANTAL47MF/6.3V
C632	1-164-156-11	s	CAPACITOR,CERAMIC 0.1MF/25V F
C633	1-164-156-11	s	CAPACITOR,CERAMIC 0.1MF/25V F
C651	1-164-156-11	s	CAPACITOR,CERAMIC 0.1MF/25V F
C652	1-164-156-11	s	CAPACITOR,CERAMIC 0.1MF/25V F
C653	1-164-156-11	s	CAPACITOR,CERAMIC 0.1MF/25V F
C654	1-110-569-21	s	CAPACITOR CHIP TANTAL47MF/6.3V
C655	1-164-156-11	s	CAPACITOR,CERAMIC 0.1MF/25V F
C656	1-164-315-11	s	CAPACITOR,CERAMIC 470PF/50V CH
C657	1-164-156-11	s	CAPACITOR,CERAMIC 0.1MF/25V F
C658	1-164-156-11	s	CAPACITOR,CERAMIC 0.1MF/25V F
C701	1-162-964-11	s	CAPACITOR,CERAMIC 1000PF/50V B
C702	1-162-964-11	s	CAPACITOR,CERAMIC 1000PF/50V B
C703	1-162-964-11	s	CAPACITOR,CERAMIC 1000PF/50V B
C704	1-165-176-11	s	CAPACITOR,CERAMIC 47000PF/16V
C705	1-135-149-21	s	CAPACITOR TANTALUM 2.2MF/10V
C711	1-162-910-11	s	CAPACITOR,CERAMIC 5PF/50V 1608
C712	1-162-910-11	s	CAPACITOR,CERAMIC 5PF/50V 1608
C714	1-164-156-11	s	CAPACITOR,CERAMIC 0.1MF/25V F
C715	1-110-569-21	s	CAPACITOR CHIP TANTAL47MF/6.3V
C716	1-164-156-11	s	CAPACITOR,CERAMIC 0.1MF/25V F
C717	1-164-315-11	s	CAPACITOR,CERAMIC 470PF/50V CH
C727	1-164-156-11	s	CAPACITOR,CERAMIC 0.1MF/25V F
C728	1-164-156-11	s	CAPACITOR,CERAMIC 0.1MF/25V F
C731	1-162-966-11	s	CAPACITOR,CERAMIC 2200PF/50V B
C732	1-162-964-11	s	CAPACITOR,CERAMIC 1000PF/50V B
C733	1-165-176-11	s	CAPACITOR,CERAMIC 47000PF/16V
C734	1-162-964-11	s	CAPACITOR,CERAMIC 1000PF/50V B
C735	1-162-964-11	s	CAPACITOR,CERAMIC 1000PF/50V B
C736	1-135-149-21	s	CAPACITOR TANTALUM 2.2MF/10V
C751	1-110-569-21	s	CAPACITOR CHIP TANTAL47MF/6.3V

(DPR-141 BOARD suffix 13 and higher)

Ref. No. or Q'ty	Part No.	SP	Description
C752	1-164-156-11	s	CAPACITOR,CERAMIC 0.1MF/25V F
C753	1-164-315-11	s	CAPACITOR,CERAMIC 470PF/50V CH
C754	1-162-915-11	s	CAPACITOR,CERAMIC 10PF/50V CH
C755	1-162-915-11	s	CAPACITOR,CERAMIC 10PF/50V CH
C756	1-164-156-11	s	CAPACITOR,CERAMIC 0.1MF/25V F
C757	1-164-156-11	s	CAPACITOR,CERAMIC 0.1MF/25V F
C758	1-164-156-11	s	CAPACITOR,CERAMIC 0.1MF/25V F
C759	1-164-315-11	s	CAPACITOR,CERAMIC 470PF/50V CH
C771	1-164-156-11	s	CAPACITOR,CERAMIC 0.1MF/25V F
C772	1-110-569-21	s	CAPACITOR CHIP TANTAL47MF/6.3V
C773	1-164-156-11	s	CAPACITOR,CERAMIC 0.1MF/25V F
C774	1-164-156-11	s	CAPACITOR,CERAMIC 0.1MF/25V F
C775	1-164-156-11	s	CAPACITOR,CERAMIC 0.1MF/25V F
C776	1-164-315-11	s	CAPACITOR,CERAMIC 470PF/50V CH
C777	1-164-156-11	s	CAPACITOR,CERAMIC 0.1MF/25V F
C778	1-164-156-11	s	CAPACITOR,CERAMIC 0.1MF/25V F
C779	1-164-156-11	s	CAPACITOR,CERAMIC 0.1MF/25V F
C780	1-110-569-21	s	CAPACITOR CHIP TANTAL47MF/6.3V
C781	1-164-156-11	s	CAPACITOR,CERAMIC 0.1MF/25V F
C782	1-164-156-11	s	CAPACITOR,CERAMIC 0.1MF/25V F
C783	1-164-156-11	s	CAPACITOR,CERAMIC 0.1MF/25V F
C784	1-110-569-21	s	CAPACITOR CHIP TANTAL47MF/6.3V
C785	1-164-315-11	s	CAPACITOR,CERAMIC 470PF/50V CH
C786	1-164-156-11	s	CAPACITOR,CERAMIC 0.1MF/25V F
C801	1-164-156-11	s	CAPACITOR,CERAMIC 0.1MF/25V F
C802	1-164-156-11	s	CAPACITOR,CERAMIC 0.1MF/25V F
C803	1-110-569-21	s	CAPACITOR CHIP TANTAL47MF/6.3V
C804	1-164-156-11	s	CAPACITOR,CERAMIC 0.1MF/25V F
C805	1-164-156-11	s	CAPACITOR,CERAMIC 0.1MF/25V F
C806	1-113-682-11	s	CAPACITOR,TANTALUM 33MF/10V
C807	1-164-156-11	s	CAPACITOR,CERAMIC 0.1MF/25V F
C808	1-164-315-11	s	CAPACITOR,CERAMIC 470PF/50V CH
C809	1-164-156-11	s	CAPACITOR,CERAMIC 0.1MF/25V F
C810	1-164-156-11	s	CAPACITOR,CERAMIC 0.1MF/25V F
C811	1-164-156-11	s	CAPACITOR,CERAMIC 0.1MF/25V F
C812	1-164-156-11	s	CAPACITOR,CERAMIC 0.1MF/25V F
C813	1-164-156-11	s	CAPACITOR,CERAMIC 0.1MF/25V F
C814	1-164-156-11	s	CAPACITOR,CERAMIC 0.1MF/25V F
C815	1-164-156-11	s	CAPACITOR,CERAMIC 0.1MF/25V F
C816	1-164-156-11	s	CAPACITOR,CERAMIC 0.1MF/25V F
C817	1-162-964-11	s	CAPACITOR,CERAMIC 1000PF/50V B
C818	1-162-964-11	s	CAPACITOR,CERAMIC 1000PF/50V B
C819	1-164-156-11	s	CAPACITOR,CERAMIC 0.1MF/25V F
C821	1-109-994-11	s	CAPACITOR,CHIP CERAMIC 2.2MF B
C822	1-164-156-11	s	CAPACITOR,CERAMIC 0.1MF/25V F
C823	1-164-315-11	s	CAPACITOR,CERAMIC 470PF/50V CH
C824	1-164-156-11	s	CAPACITOR,CERAMIC 0.1MF/25V F
C825	1-162-927-11	s	CAPACITOR,CERAMIC 100PF/50V CH
C826	1-110-569-21	s	CAPACITOR CHIP TANTAL47MF/6.3V
C827	1-164-156-11	s	CAPACITOR,CERAMIC 0.1MF/25V F
C828	1-164-156-11	s	CAPACITOR,CERAMIC 0.1MF/25V F
C829	1-104-823-11	s	CAPACITOR,TANTALUM 47MF/16V
C830	1-107-689-21	s	CAPACITOR,TANTALUM 1MF/35V
C831	1-164-156-11	s	CAPACITOR,CERAMIC 0.1MF/25V F
C832	1-164-156-11	s	CAPACITOR,CERAMIC 0.1MF/25V F
C833	1-113-682-11	s	CAPACITOR,TANTALUM 33MF/10V
C834	1-164-315-11	s	CAPACITOR,CERAMIC 470PF/50V CH
C835	1-164-156-11	s	CAPACITOR,CERAMIC 0.1MF/25V F
C836	1-164-156-11	s	CAPACITOR,CERAMIC 0.1MF/25V F

(DPR-141 BOARD suffix 13 and higher)

Ref. No. or Q'ty	Part No.	SP	Description
C837	1-110-569-21	s	CAPACITOR CHIP TANTAL47MF/6.3V
C901	1-164-156-11	s	CAPACITOR,CERAMIC 0.1MF/25V F
C902	1-164-156-11	s	CAPACITOR,CERAMIC 0.1MF/25V F
C903	1-113-991-11	s	CAPACITOR TANTALUM 33MF/16V
C904	1-113-991-11	s	CAPACITOR TANTALUM 33MF/16V
C923	1-164-156-11	s	CAPACITOR,CERAMIC 0.1MF/25V F
C924	1-113-682-11	s	CAPACITOR,TANTALUM 33MF/10V
C925	1-164-156-11	s	CAPACITOR,CERAMIC 0.1MF/25V F
C926	1-164-156-11	s	CAPACITOR,CERAMIC 0.1MF/25V F
C927	1-164-156-11	s	CAPACITOR,CERAMIC 0.1MF/25V F
C928	1-164-156-11	s	CAPACITOR,CERAMIC 0.1MF/25V F
C929	1-164-156-11	s	CAPACITOR,CERAMIC 0.1MF/25V F
C930	1-164-156-11	s	CAPACITOR,CERAMIC 0.1MF/25V F
C931	1-162-927-11	s	CAPACITOR,CERAMIC 100PF/50V CH
C932	1-162-927-11	s	CAPACITOR,CERAMIC 100PF/50V CH
C933	1-162-927-11	s	CAPACITOR,CERAMIC 100PF/50V CH
C934	1-162-927-11	s	CAPACITOR,CERAMIC 100PF/50V CH
C935	1-162-927-11	s	CAPACITOR,CERAMIC 100PF/50V CH
C936	1-162-927-11	s	CAPACITOR,CERAMIC 100PF/50V CH
C937	1-162-927-11	s	CAPACITOR,CERAMIC 100PF/50V CH
C938	1-162-927-11	s	CAPACITOR,CERAMIC 100PF/50V CH
C939	1-104-546-11	s	CAPACITOR,FILM 0.0039MF/16V
C940	1-104-546-11	s	CAPACITOR,FILM 0.0039MF/16V
C941	1-164-392-11	s	CAPACITOR CERAMIC 390PF/50V CH
C942	1-164-392-11	s	CAPACITOR CERAMIC 390PF/50V CH
C943	1-162-915-11	s	CAPACITOR,CERAMIC 10PF/50V CH
C944	1-162-915-11	s	CAPACITOR,CERAMIC 10PF/50V CH
C945	1-162-959-11	s	CAPACITOR,CERAMIC 330PF/50V SL
C946	1-162-959-11	s	CAPACITOR,CERAMIC 330PF/50V SL
C947	1-162-927-11	s	CAPACITOR,CERAMIC 100PF/50V CH
C948	1-162-927-11	s	CAPACITOR,CERAMIC 100PF/50V CH
C949	1-164-156-11	s	CAPACITOR,CERAMIC 0.1MF/25V F
C950	1-164-156-11	s	CAPACITOR,CERAMIC 0.1MF/25V F
C951	1-113-682-11	s	CAPACITOR,TANTALUM 33MF/10V
C952	1-113-682-11	s	CAPACITOR,TANTALUM 33MF/10V
C954	1-164-156-11	s	CAPACITOR,CERAMIC 0.1MF/25V F
C955	1-164-156-11	s	CAPACITOR,CERAMIC 0.1MF/25V F
C956	1-110-569-21	s	CAPACITOR CHIP TANTAL47MF/6.3V
C957	1-113-682-11	s	CAPACITOR,TANTALUM 33MF/10V
C958	1-113-682-11	s	CAPACITOR,TANTALUM 33MF/10V
C959	1-164-315-11	s	CAPACITOR,CERAMIC 470PF/50V CH
C960	1-164-315-11	s	CAPACITOR,CERAMIC 470PF/50V CH
C961	1-164-156-11	s	CAPACITOR,CERAMIC 0.1MF/25V F
C962	1-164-156-11	s	CAPACITOR,CERAMIC 0.1MF/25V F
C965	1-104-913-11	s	CAPACITOR,TANTALUM 10MF/16V
C966	1-104-913-11	s	CAPACITOR,TANTALUM 10MF/16V
C971	1-104-913-11	s	CAPACITOR,TANTALUM 10MF/16V
C972	1-104-913-11	s	CAPACITOR,TANTALUM 10MF/16V
C973	1-104-913-11	s	CAPACITOR,TANTALUM 10MF/16V
C985	1-162-923-11	s	CAPACITOR,CERAMIC 47PF/50V CH
C986	1-162-923-11	s	CAPACITOR,CERAMIC 47PF/50V CH
C987	1-162-927-11	s	CAPACITOR,CERAMIC 100PF/50V CH
C988	1-162-927-11	s	CAPACITOR,CERAMIC 100PF/50V CH
C989	1-164-156-11	s	CAPACITOR,CERAMIC 0.1MF/25V F
C990	1-164-156-11	s	CAPACITOR,CERAMIC 0.1MF/25V F
C991	1-164-156-11	s	CAPACITOR,CERAMIC 0.1MF/25V F
C992	1-164-156-11	s	CAPACITOR,CERAMIC 0.1MF/25V F
C993	1-162-965-11	s	CAPACITOR,CERAMIC 1500PF/50V B
C994	1-162-965-11	s	CAPACITOR,CERAMIC 1500PF/50V B

(DPR-141 BOARD suffix 13 and higher)

Ref. No. or Q'ty	Part No.	SP	Description	
C995	1-164-156-11	s	CAPACITOR,CERAMIC 0.1MF/25V F	
C996	1-164-156-11	s	CAPACITOR,CERAMIC 0.1MF/25V F	
C997	1-164-156-11	s	CAPACITOR,CERAMIC 0.1MF/25V F	
C998	1-162-966-11	s	CAPACITOR,CERAMIC 2200PF/50V B	
C999	1-164-156-11	s	CAPACITOR,CERAMIC 0.1MF/25V F	
C1000	1-164-156-11	s	CAPACITOR,CERAMIC 0.1MF/25V F	
C1001	1-162-966-11	s	CAPACITOR,CERAMIC 2200PF/50V B	
C1002	1-127-692-11	s	CAP, CHIP CERAMIC 10MF B 3216	
C1003	1-127-692-11	s	CAP, CHIP CERAMIC 10MF B 3216	
C1004	1-127-692-11	s	CAP, CHIP CERAMIC 10MF B 3216	
C1005	1-127-692-11	s	CAP, CHIP CERAMIC 10MF B 3216	
C1006	1-164-156-11	s	CAPACITOR,CERAMIC 0.1MF/25V F	
CN3	1-770-452-21	o	CONNECTOR, BOARD TO BOARD 30P	
CN4	1-774-391-11	o	CONNECTOR, BOARD TO BOARD 60P	
CN5	1-580-267-11	o	CONNECTOR,BOARD TO BOARD 20P	
CN6	1-793-091-11	o	CONNECTOR, BOARD TO BOARD 60P	
CN7	1-785-551-11	o	CONNECTOR, BOARD TO BOARD 120P	
CN9	1-785-849-11	o	CONNECTOR, BOARD TO BOARD 40P	
D101	8-719-029-63	s	DIODE RD4.3UH-T1	
D102	8-719-029-63	s	DIODE RD4.3UH-T1	
D301	8-719-421-69	s	DIODE MA133	
D302	8-719-421-69	s	DIODE MA133	
D303	8-719-421-69	s	DIODE MA133	
D304	8-719-421-69	s	DIODE MA133	
D701	8-719-027-95	s	DIODE HSM88WK	
D702	8-719-041-39	s	DIODE KV1470	(5MA)
D713	8-719-041-39	s	DIODE KV1470	(5MA)
D714	8-719-027-95	s	DIODE HSM88WK	
D821	8-719-041-39	s	DIODE KV1470	(5MA)
D901	8-719-941-09	s	DIODE DAP202U	
D902	8-719-941-09	s	DIODE DAP202U	
FB301	1-414-445-11	s	FERRITE, EMI (SMD)	
FB302	1-414-445-11	s	FERRITE, EMI (SMD)	
FB303	1-414-445-11	s	FERRITE, EMI (SMD)	
FB304	1-414-445-11	s	FERRITE, EMI (SMD)	
FL301	1-233-742-11	s	FILTER, LOW PASS	
FL302	1-233-740-11	s	FILTER, LOW PASS	
FL303	1-233-742-11	s	FILTER, LOW PASS	
FL304	1-233-740-11	s	FILTER, LOW PASS	
FL305	1-233-742-11	s	FILTER, LOW PASS	
FL306	1-233-740-11	s	FILTER, LOW PASS	
FL307	1-233-740-11	s	FILTER, LOW PASS	
FL501	1-233-345-21	s	FILTER, LOW PASS (5.5MHZ)	
FL502	1-233-776-11	s	FILTER, LOW PASS	
FL503	1-233-776-11	s	FILTER, LOW PASS	
IC101	8-759-185-42	s	IC LM4040AIM3-2.5	
IC102	8-759-669-72	s	IC TL064CPWR	
IC103	8-759-669-45	s	IC TL062CPWR-12	
IC104	8-759-673-43	s	IC MM74HC04MTCX	
IC105	8-759-523-95	s	IC TC74VHC74FT(EL)	
IC106	8-752-376-32	s	IC CXD2310AR	
IC107	8-752-376-32	s	IC CXD2310AR	
IC108	8-752-376-32	s	IC CXD2310AR	
IC201	8-759-674-44	s	IC MM74HCT244MTCX	
IC202	8-759-669-72	s	IC TL064CPWR	
IC204	8-759-491-46	s	IC TC74VHCT04AFT (EL)	
IC205	8-759-058-62	s	IC TC7S08FU-TE85R	

(DPR-141 BOARD suffix 13 and higher)

Ref. No. or Q'ty	Part No.	SP	Description
IC206	8-759-196-93	s	IC TC7SH00FU-TE85R
IC207	8-759-599-93	s	IC NC7SZ08P5
IC208	8-759-196-96	s	IC TC7SH08FU (TE85R)
IC209	8-759-447-77	s	IC TC7WH74FU (TE12R)
IC211	8-752-360-44	s	IC CXK1203AR
IC212	8-752-360-44	s	IC CXK1203AR
IC213	8-752-360-44	s	IC CXK1203AR
IC214	8-752-360-44	s	IC CXK1203AR
IC215	8-759-058-62	s	IC TC7S08FU-TE85R
IC217	8-759-491-46	s	IC TC74VHCT04AFT (EL)
IC218	8-759-674-44	s	IC MM74HCT244MTCX
IC219	8-759-196-93	s	IC TC7SH00FU-TE85R
IC301	8-759-678-06	s	IC CAT24WC02JI-TE13
IC302	8-759-064-36	s	IC MB88346BPFV
IC303	8-759-523-04	s	IC TC74HC4538AFT
IC304	8-759-058-58	s	IC TC7S04FU-TE85R
IC305	8-759-485-79	s	IC TC7SET08FU (TE85L)
IC306	8-759-673-37	s	IC MM74HC00MTCX
IC307	8-752-363-60	s	IC CXD2307R-T4
IC308	8-759-523-02	s	IC TC74HC4053AFT(EL)
IC309	8-759-531-92	s	IC TC7WH04FU(TE12R)
IC310	8-752-381-65	o	IC CXD606-101R
IC311	8-759-485-79	s	IC TC7SET08FU (TE85L)
IC312	8-759-184-64	s	IC TC4W66FU
IC313	8-759-669-45	s	IC TL062CPWR-12
IC314	8-759-271-86	s	IC TC7SH04FU
IC315	8-759-491-46	s	IC TC74VHCT04AFT (EL)
IC316	8-759-523-95	s	IC TC74VHC74FT(EL)
IC317	8-759-485-79	s	IC TC7SET08FU (TE85L)
IC318	8-759-546-74	s	IC TC7WH157FU(TE12R)
IC319	8-752-334-64	s	IC CXD1171M
IC320	8-759-196-93	s	IC TC7SH00FU-TE85R
IC321	8-759-196-96	s	IC TC7SH08FU (TE85R)
IC324	8-759-196-93	s	IC TC7SH00FU-TE85R
IC501	8-759-464-95	s	IC AK6420AF-E2
IC502	8-759-498-27	s	IC TK16074MTL
IC503	8-759-498-27	s	IC TK16074MTL
IC504	8-759-271-86	s	IC TC7SH04FU
IC505	8-759-457-61	s	IC CXD8628BR
IC506	8-759-485-79	s	IC TC7SET08FU (TE85L)
IC509	8-759-524-50	s	IC TC74VHC541FT(EL)
IC510	8-759-271-86	s	IC TC7SH04FU
IC511	8-759-386-27	s	IC 74LCX04MTCX
IC512	8-759-524-50	s	IC TC74VHC541FT(EL)
IC513	8-759-485-79	s	IC TC7SET08FU (TE85L)
IC514	8-752-363-60	s	IC CXD2307R-T4
IC517	8-759-524-04	s	IC TC74VHC125FT (EL)
IC518	8-759-524-04	s	IC TC74VHC125FT (EL)
IC521	8-759-196-96	s	IC TC7SH08FU (TE85R)
IC601	8-759-327-31	s	IC CXD2183R
IC611	8-752-378-68	s	IC CXD3101R
IC621	8-759-328-28	s	IC ZA4024
IC631	8-759-328-28	s	IC ZA4024
IC651	8-759-426-26	s	IC CXD8608R
IC652	8-759-524-52	s	IC TC74VHC574FT(EL)
IC653	8-759-524-52	s	IC TC74VHC574FT(EL)
IC711	8-752-375-05	s	IC CXD2191R
IC751	8-752-864-20	s	IC CXP911016-015Q
IC752	8-759-464-95	s	IC AK6420AF-E2

(DPR-141 BOARD suffix 13 and higher)

Ref. No. or Q'ty	Part No.	SP	Description
IC771	8-759-385-90	s	IC CXD2187AR
IC772	8-759-585-05	s	IC CXD8627BR
IC773	8-759-082-60	s	IC TC7S66FU
IC781	8-759-433-17	s	IC UPD482445LG4-B10-9MH-E2-HDC
IC801	8-759-529-45	s	IC IDT71V256SA15PZ-TL
IC811	8-752-374-96	s	IC CXD2190R
IC821	8-759-271-86	s	IC TC7SH04FU
IC822	8-759-271-86	s	IC TC7SH04FU
IC823	8-759-362-16	s	IC CXD2913AQ
IC824	8-759-327-01	s	IC NJM062V-TE2
IC825	8-759-429-28	s	IC CXD8630R
IC826	8-759-082-60	s	IC TC7S66FU
IC901	8-759-422-21	s	IC NJM4580VTE2
IC905	8-759-173-51	s	IC SM5872AS (ET)
IC906	8-759-422-21	s	IC NJM4580VTE2
IC907	8-759-422-21	s	IC NJM4580VTE2
IC908	8-759-422-21	s	IC NJM4580VTE2
IC911	8-752-374-97	s	IC CXD2705AR
IC912	8-759-674-62	s	IC MM74HCT541MTCX
IC913	8-759-523-94	s	IC TC74VHC32FT(EL)
IC917	8-759-833-99	s	IC MC74HC4052ADTR2
IC918	8-759-833-99	s	IC MC74HC4052ADTR2
IC919	8-759-422-21	s	IC NJM4580VTE2
IC921	8-759-422-21	s	IC NJM4580VTE2
IC923	8-759-462-08	s	IC AK5352-VF (E2)
IC924	8-759-447-77	s	IC TC7WH74FU (TE12R)
L101	1-412-951-11	s	INDUCTOR 10UH (2520)
L102	1-412-951-11	s	INDUCTOR 10UH (2520)
L103	1-412-951-11	s	INDUCTOR 10UH (2520)
L104	1-412-951-11	s	INDUCTOR 10UH (2520)
L105	1-412-951-11	s	INDUCTOR 10UH (2520)
L106	1-412-951-11	s	INDUCTOR 10UH (2520)
L107	1-412-951-11	s	INDUCTOR 10UH (2520)
L201	1-424-643-11	s	COIL, CHOKE 10UH
L301	1-412-955-11	s	INDUCTOR 22UH (2520)
L302	1-412-955-11	s	INDUCTOR 22UH (2520)
L303	1-410-371-41	s	CHIP INDUCTOR 1.5UH
L305	1-410-385-11	s	INDUCTOR,CHIP 22UH (3225)
L306	1-424-643-11	s	COIL, CHOKE 10UH
L307	1-412-955-11	s	INDUCTOR 22UH (2520)
L308	1-412-955-11	s	INDUCTOR 22UH (2520)
L309	1-412-955-11	s	INDUCTOR 22UH (2520)
L310	1-412-955-11	s	INDUCTOR 22UH (2520)
L501	1-414-398-11	s	INDUCTOR (SMD) 10UH
L502	1-414-398-11	s	INDUCTOR (SMD) 10UH
L503	1-414-398-11	s	INDUCTOR (SMD) 10UH
L601	1-410-381-11	s	INDUCTOR,CHIP 10UH (3225)
L611	1-414-398-11	s	INDUCTOR (SMD) 10UH
L651	1-414-398-11	s	INDUCTOR (SMD) 10UH
L701	1-410-378-11	s	INDUCTOR,CHIP 5.6UH (3225)
L711	1-410-389-31	s	INDUCTOR,CHIP 47UH (3225)
L713	1-410-740-31	s	INDUCTOR,CHIP 0.82UH
L751	1-414-398-11	s	INDUCTOR (SMD) 10UH
L771	1-414-398-11	s	INDUCTOR (SMD) 10UH
L772	1-414-398-11	s	INDUCTOR (SMD) 10UH
L781	1-414-398-11	s	INDUCTOR (SMD) 10UH
L801	1-414-398-11	s	INDUCTOR (SMD) 10UH
L811	1-414-398-11	s	INDUCTOR (SMD) 10UH

(DPR-141 BOARD suffix 13 and higher)

Ref. No. or Q'ty	Part No.	SP	Description
L821	1-414-398-11	s	INDUCTOR (SMD) 10UH
L823	1-414-398-11	s	INDUCTOR (SMD) 10UH
L824	1-414-398-11	s	INDUCTOR (SMD) 10UH
L826	1-414-398-11	s	INDUCTOR (SMD) 10UH
L827	1-414-398-11	s	INDUCTOR (SMD) 10UH
L901	1-414-398-11	s	INDUCTOR (SMD) 10UH
L902	1-414-398-11	s	INDUCTOR (SMD) 10UH
L903	1-414-398-11	s	INDUCTOR (SMD) 10UH
L904	1-414-398-11	s	INDUCTOR (SMD) 10UH
L905	1-410-393-11	s	INDUCTOR,CHIP 100UH (3225)
L906	1-410-393-11	s	INDUCTOR,CHIP 100UH (3225)
L907	1-414-398-11	s	INDUCTOR (SMD) 10UH
L908	1-414-398-11	s	INDUCTOR (SMD) 10UH
L909	1-414-398-11	s	INDUCTOR (SMD) 10UH
L980	1-414-392-31	s	INDUCTOR (SMD) 1.0UH
L981	1-414-392-31	s	INDUCTOR (SMD) 1.0UH
L982	1-414-392-31	s	INDUCTOR (SMD) 1.0UH
L983	1-414-392-31	s	INDUCTOR (SMD) 1.0UH
L984	1-414-392-31	s	INDUCTOR (SMD) 1.0UH
LV825	1-411-984-11	s	COIL, VARIABLE
Q101	8-729-101-07	s	TRANSISTOR 2SB798
Q102	8-729-101-07	s	TRANSISTOR 2SB798
Q103	8-729-101-07	s	TRANSISTOR 2SB798
Q104	8-729-807-51	s	TRANSISTOR 2SD1623-S
Q105	8-729-427-74	s	TRANSISTOR XP4601-TXE
Q106	8-729-427-74	s	TRANSISTOR XP4601-TXE
Q107	8-729-427-74	s	TRANSISTOR XP4601-TXE
Q108	8-729-427-74	s	TRANSISTOR XP4601-TXE
Q301	8-729-427-83	s	TRANSISTOR XP6501-TXE
Q302	8-729-143-13	s	TRANSISTOR 2SC4176-B34
Q303	8-729-026-32	s	TRANSISTOR XP6534-TX
Q304	8-729-026-34	s	TRANSISTOR XP6435-TX
Q305	8-729-427-83	s	TRANSISTOR XP6501-TXE
Q306	8-729-143-13	s	TRANSISTOR 2SC4176-B34
Q307	8-729-026-32	s	TRANSISTOR XP6534-TX
Q308	8-729-026-34	s	TRANSISTOR XP6435-TX
Q309	8-729-427-83	s	TRANSISTOR XP6501-TXE
Q310	8-729-143-13	s	TRANSISTOR 2SC4176-B34
Q311	8-729-026-32	s	TRANSISTOR XP6534-TX
Q312	8-729-026-34	s	TRANSISTOR XP6435-TX
Q313	8-729-026-53	s	TRANSISTOR 2SA1576A-T106-QR
Q501	8-729-905-35	s	TRANSISTOR 2SC4081-R
Q502	8-729-905-35	s	TRANSISTOR 2SC4081-R
Q503	8-729-905-35	s	TRANSISTOR 2SC4081-R
Q504	8-729-905-35	s	TRANSISTOR 2SC4081-R
Q505	8-729-905-35	s	TRANSISTOR 2SC4081-R
Q506	8-729-026-53	s	TRANSISTOR 2SA1576A-T106-QR
Q507	8-729-055-85	s	TRANSISTOR UMT1N-TN
Q508	8-729-055-85	s	TRANSISTOR UMT1N-TN
Q823	8-729-029-14	s	TRANSISTOR DTC144EUA-T106
Q901	6-550-007-01	s	TRANSISTOR UMC3NTR
Q902	8-729-013-37	s	TRANSISTOR 2SC4213-AB-TE85L
Q903	8-729-013-37	s	TRANSISTOR 2SC4213-AB-TE85L
Q904	8-729-013-37	s	TRANSISTOR 2SC4213-AB-TE85L
Q905	8-729-013-37	s	TRANSISTOR 2SC4213-AB-TE85L
Q906	6-550-007-01	s	TRANSISTOR UMC3NTR
Q907	6-550-007-01	s	TRANSISTOR UMC3NTR
Q908	6-550-007-01	s	TRANSISTOR UMC3NTR

(DPR-141 BOARD suffix 13 and higher)

Ref. No. or Q'ty	Part No.	SP	Description
R101	1-218-881-11	s	RESISTOR, CHIP 27K 1/16W(1608)
R102	1-218-871-11	s	RESISTOR,CHIP 10K 1/16W (1608)
R103	1-218-881-11	s	RESISTOR, CHIP 27K 1/16W(1608)
R104	1-218-861-11	s	RESISTOR,CHIP 3.9K 1/16W(1608)
R105	1-218-879-11	s	RESISTOR,CHIP 22K 1/16W (1608)
R106	1-216-823-11	s	RESISTOR, CHIP 1.5K 1/16W
R107	1-218-863-11	s	RESISTOR,CHIP 4.7K 1/16W(1608)
R108	1-218-853-11	s	RESISTOR,CHIP 1.8K 1/16W(1608)
R109	1-218-883-11	s	RESISTOR,CHIP 33K 1/16W (1608)
R110	1-216-823-11	s	RESISTOR, CHIP 1.5K 1/16W
R111	1-218-881-11	s	RESISTOR, CHIP 27K 1/16W(1608)
R112	1-218-863-11	s	RESISTOR,CHIP 4.7K 1/16W(1608)
R113	1-218-883-11	s	RESISTOR,CHIP 33K 1/16W (1608)
R114	1-218-885-11	s	RESISTOR,CHIP 39K 1/16W (1608)
R115	1-218-884-11	s	RESISTOR,CHIP 36K 1/16W (1608)
R116	1-218-875-11	s	RESISTOR,CHIP 15K 1/16W (1608)
R117	1-218-883-11	s	RESISTOR,CHIP 33K 1/16W (1608)
R118	1-218-883-11	s	RESISTOR,CHIP 33K 1/16W (1608)
R119	1-218-847-11	s	RESISTOR, CHIP 1K 1/16W (1608)
R120	1-218-847-11	s	RESISTOR, CHIP 1K 1/16W (1608)
R121	1-216-845-11	s	RESISTOR,CHIP 100K 1/16W(1608)
R122	1-216-864-11	s	CONDUCTOR, CHIP (1608)
R123	1-216-857-11	s	RESISTOR,CHIP 1M 1/16W(1608)
R124	1-216-857-11	s	RESISTOR,CHIP 1M 1/16W(1608)
R125	1-218-823-11	s	RESISTOR,CHIP 100 1/16W (1608)
R126	1-218-823-11	s	RESISTOR,CHIP 100 1/16W (1608)
R131	1-216-864-11	s	CONDUCTOR, CHIP (1608)
R133	1-216-797-11	s	RESISTOR,CHIP 10 1/16W 1608
R134	1-216-805-11	s	RESISTOR,CHIP 47 1/16W 1608
R136	1-216-864-11	s	CONDUCTOR, CHIP (1608)
R137	1-218-859-11	s	RESISTOR,CHIP 3.3K 1/16W(1608)
R138	1-218-835-11	s	RESISTOR,CHIP 330 1/16W (1608)
R139	1-218-859-11	s	RESISTOR,CHIP 3.3K 1/16W(1608)
R140	1-211-977-11	s	RESISTOR,CHIP 22 1/16W (1608)
R141	1-216-813-11	s	RESISTOR, CHIP 220 1/16W 1608
R142	1-216-797-11	s	RESISTOR,CHIP 10 1/16W 1608
R143	1-218-859-11	s	RESISTOR,CHIP 3.3K 1/16W(1608)
R144	1-218-835-11	s	RESISTOR,CHIP 330 1/16W (1608)
R145	1-218-859-11	s	RESISTOR,CHIP 3.3K 1/16W(1608)
R146	1-211-977-11	s	RESISTOR,CHIP 22 1/16W (1608)
R147	1-216-797-11	s	RESISTOR,CHIP 10 1/16W 1608
R148	1-216-813-11	s	RESISTOR, CHIP 220 1/16W 1608
R149	1-218-859-11	s	RESISTOR,CHIP 3.3K 1/16W(1608)
R150	1-218-835-11	s	RESISTOR,CHIP 330 1/16W (1608)
R151	1-218-859-11	s	RESISTOR,CHIP 3.3K 1/16W(1608)
R152	1-211-977-11	s	RESISTOR,CHIP 22 1/16W (1608)
R153	1-216-797-11	s	RESISTOR,CHIP 10 1/16W 1608
R154	1-216-813-11	s	RESISTOR, CHIP 220 1/16W 1608
R201	1-218-823-11	s	RESISTOR,CHIP 100 1/16W (1608)
R202	1-218-871-11	s	RESISTOR,CHIP 10K 1/16W (1608)
R203	1-218-843-11	s	RESISTOR,CHIP 680 1/16W (1608)
R204	1-216-864-11	s	CONDUCTOR, CHIP (1608)
R206	1-218-823-11	s	RESISTOR,CHIP 100 1/16W (1608)
R208	1-218-847-11	s	RESISTOR, CHIP 1K 1/16W (1608)
R209	1-216-864-11	s	CONDUCTOR, CHIP (1608)
R210	1-218-871-11	s	RESISTOR,CHIP 10K 1/16W (1608)
R211	1-218-871-11	s	RESISTOR,CHIP 10K 1/16W (1608)
R212	1-218-871-11	s	RESISTOR,CHIP 10K 1/16W (1608)

(DPR-141 BOARD suffix 13 and higher)

Ref. No. or Q'ty	Part No.	SP	Description
R213	1-218-871-11	s	RESISTOR,CHIP 10K 1/16W (1608)
R214	1-218-871-11	s	RESISTOR,CHIP 10K 1/16W (1608)
R215	1-218-871-11	s	RESISTOR,CHIP 10K 1/16W (1608)
R216	1-218-867-11	s	RESISTOR,CHIP 6.8K 1/16W(1608)
R217	1-218-867-11	s	RESISTOR,CHIP 6.8K 1/16W(1608)
R218	1-218-867-11	s	RESISTOR,CHIP 6.8K 1/16W(1608)
R219	1-218-867-11	s	RESISTOR,CHIP 6.8K 1/16W(1608)
R220	1-218-867-11	s	RESISTOR,CHIP 6.8K 1/16W(1608)
R221	1-218-867-11	s	RESISTOR,CHIP 6.8K 1/16W(1608)
R223	1-216-797-11	s	RESISTOR,CHIP 10 1/16W 1608
R224	1-216-864-11	s	CONDUCTOR, CHIP (1608)
R225	1-218-883-11	s	RESISTOR,CHIP 33K 1/16W (1608)
R226	1-218-883-11	s	RESISTOR,CHIP 33K 1/16W (1608)
R227	1-218-883-11	s	RESISTOR,CHIP 33K 1/16W (1608)
R228	1-216-797-11	s	RESISTOR,CHIP 10 1/16W 1608
R229	1-218-883-11	s	RESISTOR,CHIP 33K 1/16W (1608)
R230	1-218-883-11	s	RESISTOR,CHIP 33K 1/16W (1608)
R231	1-218-883-11	s	RESISTOR,CHIP 33K 1/16W (1608)
R233	1-216-805-11	s	RESISTOR,CHIP 47 1/16W 1608
R234	1-218-823-11	s	RESISTOR,CHIP 100 1/16W (1608)
R235	*1 1-216-864-11	s	CONDUCTOR, CHIP (1608)
R236	*2 1-211-985-11	s	RESISTOR,CHIP 47 1/16W (1608)
R237	1-216-825-11	s	RESISTOR,CHIP 2.2K 1/16W 1608
R238	1-216-797-11	s	RESISTOR,CHIP 10 1/16W 1608
R239	1-216-813-11	s	RESISTOR, CHIP 220 1/16W 1608
R240	1-216-845-11	s	RESISTOR,CHIP 100K 1/16W(1608)
R241	1-216-845-11	s	RESISTOR,CHIP 100K 1/16W(1608)
R242	1-216-845-11	s	RESISTOR,CHIP 100K 1/16W(1608)
R243	1-218-837-11	s	RESISTOR,CHIP 390 1/16W (1608)
R244	1-218-847-11	s	RESISTOR, CHIP 1K 1/16W (1608)
R245	1-218-823-11	s	RESISTOR,CHIP 100 1/16W (1608)
R246	1-218-823-11	s	RESISTOR,CHIP 100 1/16W (1608)
R247	1-216-805-11	s	RESISTOR,CHIP 47 1/16W 1608
R248	1-216-805-11	s	RESISTOR,CHIP 47 1/16W 1608
R249	1-216-805-11	s	RESISTOR,CHIP 47 1/16W 1608
R251	1-218-847-11	s	RESISTOR, CHIP 1K 1/16W (1608)
R252	1-218-871-11	s	RESISTOR,CHIP 10K 1/16W (1608)
R253	1-218-823-11	s	RESISTOR,CHIP 100 1/16W (1608)
R255	1-218-847-11	s	RESISTOR, CHIP 1K 1/16W (1608)
R256	1-218-830-11	s	RESISTOR,CHIP 200 1/16W (1608)
R301	1-218-859-11	s	RESISTOR,CHIP 3.3K 1/16W(1608)
R302	1-218-883-11	s	RESISTOR,CHIP 33K 1/16W (1608)
R303	1-218-879-11	s	RESISTOR,CHIP 22K 1/16W (1608)
R304	1-218-887-11	s	RESISTOR,CHIP 47K 1/16W (1608)
R305	1-218-885-11	s	RESISTOR,CHIP 39K 1/16W (1608)
R306	1-218-875-11	s	RESISTOR,CHIP 15K 1/16W (1608)
R308	1-218-887-11	s	RESISTOR,CHIP 47K 1/16W (1608)
R309	1-218-885-11	s	RESISTOR,CHIP 39K 1/16W (1608)
R310	1-218-875-11	s	RESISTOR,CHIP 15K 1/16W (1608)
R312	1-218-887-11	s	RESISTOR,CHIP 47K 1/16W (1608)
R313	1-218-885-11	s	RESISTOR,CHIP 39K 1/16W (1608)
R317	1-216-845-11	s	RESISTOR,CHIP 100K 1/16W(1608)
R318	1-216-845-11	s	RESISTOR,CHIP 100K 1/16W(1608)
R319	*1 1-218-823-11	s	RESISTOR,CHIP 100 1/16W (1608)
	*2 1-218-833-11	s	RESISTOR,CHIP 270 1/16W (1608)
R320	1-218-823-11	s	RESISTOR,CHIP 100 1/16W (1608)
R321	*1 1-218-823-11	s	RESISTOR,CHIP 100 1/16W (1608)
R322	1-218-827-11	s	RESISTOR,CHIP 150 1/16W (1608)
R323	1-218-827-11	s	RESISTOR,CHIP 150 1/16W (1608)

(DPR-141 BOARD suffix 13 and higher)

Ref. No. or Q'ty	Part No.	SP	Description
R324	1-218-827-11	s	RESISTOR,CHIP 150 1/16W (1608)
R325	1-218-859-11	s	RESISTOR,CHIP 3.3K 1/16W(1608)
R326	1-218-859-11	s	RESISTOR,CHIP 3.3K 1/16W(1608)
R327	1-218-859-11	s	RESISTOR,CHIP 3.3K 1/16W(1608)
R328	1-211-977-11	s	RESISTOR,CHIP 22 1/16W (1608)
R329	1-216-825-11	s	RESISTOR,CHIP 2.2K 1/16W 1608
R330	1-218-859-11	s	RESISTOR,CHIP 3.3K 1/16W(1608)
R331	1-218-847-11	s	RESISTOR, CHIP 1K 1/16W (1608)
R332	1-218-847-11	s	RESISTOR, CHIP 1K 1/16W (1608)
R333	1-211-977-11	s	RESISTOR,CHIP 22 1/16W (1608)
R334	1-211-977-11	s	RESISTOR,CHIP 22 1/16W (1608)
R335	1-218-863-11	s	RESISTOR,CHIP 4.7K 1/16W(1608)
R336	1-218-863-11	s	RESISTOR,CHIP 4.7K 1/16W(1608)
R337	1-218-847-11	s	RESISTOR, CHIP 1K 1/16W (1608)
R338	1-218-874-11	s	RESISTOR,CHIP 13K 1/16W (1608)
R339	1-218-839-11	s	RESISTOR,CHIP 470 1/16W (1608)
R342	1-218-863-11	s	RESISTOR,CHIP 4.7K 1/16W(1608)
R343	1-218-839-11	s	RESISTOR,CHIP 470 1/16W (1608)
R344	1-218-847-11	s	RESISTOR, CHIP 1K 1/16W (1608)
R345	1-211-977-11	s	RESISTOR,CHIP 22 1/16W (1608)
R346	1-218-863-11	s	RESISTOR,CHIP 4.7K 1/16W(1608)
R347	1-218-863-11	s	RESISTOR,CHIP 4.7K 1/16W(1608)
R348	1-211-977-11	s	RESISTOR,CHIP 22 1/16W (1608)
R349	1-216-857-11	s	RESISTOR,CHIP 1M 1/16W(1608)
R350	1-216-825-11	s	RESISTOR,CHIP 2.2K 1/16W 1608
R351	1-218-859-11	s	RESISTOR,CHIP 3.3K 1/16W(1608)
R352	1-218-847-11	s	RESISTOR, CHIP 1K 1/16W (1608)
R353	1-218-847-11	s	RESISTOR, CHIP 1K 1/16W (1608)
R354	1-211-977-11	s	RESISTOR,CHIP 22 1/16W (1608)
R355	1-211-977-11	s	RESISTOR,CHIP 22 1/16W (1608)
R356	1-218-863-11	s	RESISTOR,CHIP 4.7K 1/16W(1608)
R357	1-218-863-11	s	RESISTOR,CHIP 4.7K 1/16W(1608)
R358	1-218-847-11	s	RESISTOR, CHIP 1K 1/16W (1608)
R359	1-218-874-11	s	RESISTOR,CHIP 13K 1/16W (1608)
R360	1-218-839-11	s	RESISTOR,CHIP 470 1/16W (1608)
R363	1-218-863-11	s	RESISTOR,CHIP 4.7K 1/16W(1608)
R364	1-218-839-11	s	RESISTOR,CHIP 470 1/16W (1608)
R365	1-218-847-11	s	RESISTOR, CHIP 1K 1/16W (1608)
R366	1-211-977-11	s	RESISTOR,CHIP 22 1/16W (1608)
R367	1-218-863-11	s	RESISTOR,CHIP 4.7K 1/16W(1608)
R368	1-218-863-11	s	RESISTOR,CHIP 4.7K 1/16W(1608)
R369	1-211-977-11	s	RESISTOR,CHIP 22 1/16W (1608)
R370	1-216-825-11	s	RESISTOR,CHIP 2.2K 1/16W 1608
R371	1-218-859-11	s	RESISTOR,CHIP 3.3K 1/16W(1608)
R372	1-218-847-11	s	RESISTOR, CHIP 1K 1/16W (1608)
R373	1-218-847-11	s	RESISTOR, CHIP 1K 1/16W (1608)
R374	1-211-977-11	s	RESISTOR,CHIP 22 1/16W (1608)
R375	1-211-977-11	s	RESISTOR,CHIP 22 1/16W (1608)
R376	1-218-863-11	s	RESISTOR,CHIP 4.7K 1/16W(1608)
R377	1-218-863-11	s	RESISTOR,CHIP 4.7K 1/16W(1608)
R378	1-218-847-11	s	RESISTOR, CHIP 1K 1/16W (1608)
R379	1-218-874-11	s	RESISTOR,CHIP 13K 1/16W (1608)
R380	1-218-839-11	s	RESISTOR,CHIP 470 1/16W (1608)
R383	1-218-863-11	s	RESISTOR,CHIP 4.7K 1/16W(1608)
R384	1-218-839-11	s	RESISTOR,CHIP 470 1/16W (1608)
R385	1-218-847-11	s	RESISTOR, CHIP 1K 1/16W (1608)
R386	1-211-977-11	s	RESISTOR,CHIP 22 1/16W (1608)
R387	1-218-863-11	s	RESISTOR,CHIP 4.7K 1/16W(1608)
R388	1-218-863-11	s	RESISTOR,CHIP 4.7K 1/16W(1608)

(DPR-141 BOARD suffix 13 and higher)

Ref. No. or Q'ty	Part No.	SP	Description
R389	1-211-977-11	s	RESISTOR,CHIP 22 1/16W (1608)
R390	1-218-843-11	s	RESISTOR,CHIP 680 1/16W (1608)
R391	1-218-843-11	s	RESISTOR,CHIP 680 1/16W (1608)
R392	1-216-805-11	s	RESISTOR,CHIP 47 1/16W 1608
R393	1-216-805-11	s	RESISTOR,CHIP 47 1/16W 1608
R394	1-218-847-11	s	RESISTOR, CHIP 1K 1/16W (1608)
R395	1-218-847-11	s	RESISTOR, CHIP 1K 1/16W (1608)
R396	1-218-847-11	s	RESISTOR, CHIP 1K 1/16W (1608)
R397	1-218-823-11	s	RESISTOR,CHIP 100 1/16W (1608)
R398	1-218-823-11	s	RESISTOR,CHIP 100 1/16W (1608)
R399	1-218-823-11	s	RESISTOR,CHIP 100 1/16W (1608)
R401	1-218-847-11	s	RESISTOR, CHIP 1K 1/16W (1608)
R402	1-218-847-11	s	RESISTOR, CHIP 1K 1/16W (1608)
R403	1-218-883-11	s	RESISTOR,CHIP 33K 1/16W (1608)
R404	1-218-871-11	s	RESISTOR,CHIP 10K 1/16W (1608)
R405	1-218-871-11	s	RESISTOR,CHIP 10K 1/16W (1608)
R406	1-218-871-11	s	RESISTOR,CHIP 10K 1/16W (1608)
R407	1-218-847-11	s	RESISTOR, CHIP 1K 1/16W (1608)
R408	1-218-823-11	s	RESISTOR,CHIP 100 1/16W (1608)
R409	1-218-823-11	s	RESISTOR,CHIP 100 1/16W (1608)
R410	1-218-823-11	s	RESISTOR,CHIP 100 1/16W (1608)
R411	1-216-857-11	s	RESISTOR,CHIP 1M 1/16W(1608)
R412	1-216-864-11	s	CONDUCTOR, CHIP (1608)
R413	1-216-845-11	s	RESISTOR,CHIP 100K 1/16W(1608)
R414	1-216-845-11	s	RESISTOR,CHIP 100K 1/16W(1608)
R415	1-216-797-11	s	RESISTOR,CHIP 10 1/16W 1608
R417 *2	1-208-770-11	s	RESISTOR,CHIP 330 1/10W (2012)
R419	1-216-805-11	s	RESISTOR,CHIP 47 1/16W 1608
R420	1-216-797-11	s	RESISTOR,CHIP 10 1/16W 1608
R425	1-218-839-11	s	RESISTOR,CHIP 470 1/16W (1608)
R426	1-216-813-11	s	RESISTOR, CHIP 220 1/16W 1608
R427	1-218-837-11	s	RESISTOR,CHIP 390 1/16W (1608)
R430	1-218-869-11	s	RESISTOR,CHIP 8.2K 1/16W(1608)
R431	1-218-879-11	s	RESISTOR,CHIP 22K 1/16W (1608)
R432	1-218-857-11	s	RESISTOR,CHIP 2.7K 1/16W(1608)
R433	1-218-873-11	s	RESISTOR,CHIP 12K 1/16W (1608)
R434	1-218-847-11	s	RESISTOR, CHIP 1K 1/16W (1608)
R435	1-218-847-11	s	RESISTOR, CHIP 1K 1/16W (1608)
R436	1-218-863-11	s	RESISTOR,CHIP 4.7K 1/16W(1608)
R437	1-216-805-11	s	RESISTOR,CHIP 47 1/16W 1608
R438	1-216-864-11	s	CONDUCTOR, CHIP (1608)
R441	1-216-864-11	s	CONDUCTOR, CHIP (1608)
R444	1-218-823-11	s	RESISTOR,CHIP 100 1/16W (1608)
R501	1-218-823-11	s	RESISTOR,CHIP 100 1/16W (1608)
R502	1-218-839-11	s	RESISTOR,CHIP 470 1/16W (1608)
R503	1-218-823-11	s	RESISTOR,CHIP 100 1/16W (1608)
R504	1-218-839-11	s	RESISTOR,CHIP 470 1/16W (1608)
R505	1-218-839-11	s	RESISTOR,CHIP 470 1/16W (1608)
R507	1-218-839-11	s	RESISTOR,CHIP 470 1/16W (1608)
R508	1-218-839-11	s	RESISTOR,CHIP 470 1/16W (1608)
R509	1-218-823-11	s	RESISTOR,CHIP 100 1/16W (1608)
R510	1-218-823-11	s	RESISTOR,CHIP 100 1/16W (1608)
R511	1-218-823-11	s	RESISTOR,CHIP 100 1/16W (1608)
R512	1-218-863-11	s	RESISTOR,CHIP 4.7K 1/16W(1608)
R513	1-218-863-11	s	RESISTOR,CHIP 4.7K 1/16W(1608)
R514	1-218-863-11	s	RESISTOR,CHIP 4.7K 1/16W(1608)
R515	1-218-823-11	s	RESISTOR,CHIP 100 1/16W (1608)
R516	1-216-849-11	s	RESISTOR,CHIP 220K 1/16W 1608
R517	1-216-845-11	s	RESISTOR,CHIP 100K 1/16W(1608)

(DPR-141 BOARD suffix 13 and higher)

Ref. No. or Q'ty	Part No.	SP	Description
R518	1-218-847-11	s	RESISTOR, CHIP 1K 1/16W (1608)
R519	1-216-823-11	s	RESISTOR, CHIP 1.5K 1/16W
R520	1-216-823-11	s	RESISTOR, CHIP 1.5K 1/16W
R521	1-216-823-11	s	RESISTOR, CHIP 1.5K 1/16W
R522	1-216-825-11	s	RESISTOR,CHIP 2.2K 1/16W 1608
R523	1-216-825-11	s	RESISTOR,CHIP 2.2K 1/16W 1608
R524	1-218-871-11	s	RESISTOR,CHIP 10K 1/16W (1608)
R525	1-218-871-11	s	RESISTOR,CHIP 10K 1/16W (1608)
R526	1-216-823-11	s	RESISTOR, CHIP 1.5K 1/16W
R527	1-216-823-11	s	RESISTOR, CHIP 1.5K 1/16W
R528	1-218-847-11	s	RESISTOR, CHIP 1K 1/16W (1608)
R529	1-218-847-11	s	RESISTOR, CHIP 1K 1/16W (1608)
R532	1-218-847-11	s	RESISTOR, CHIP 1K 1/16W (1608)
R533	1-218-847-11	s	RESISTOR, CHIP 1K 1/16W (1608)
R534	1-216-825-11	s	RESISTOR,CHIP 2.2K 1/16W 1608
R535	1-216-825-11	s	RESISTOR,CHIP 2.2K 1/16W 1608
R536	1-218-847-11	s	RESISTOR, CHIP 1K 1/16W (1608)
R537	1-218-830-11	s	RESISTOR,CHIP 200 1/16W (1608)
R538	1-218-830-11	s	RESISTOR,CHIP 200 1/16W (1608)
R539	1-218-830-11	s	RESISTOR,CHIP 200 1/16W (1608)
R540	1-218-859-11	s	RESISTOR,CHIP 3.3K 1/16W(1608)
R541	1-218-859-11	s	RESISTOR,CHIP 3.3K 1/16W(1608)
R542	1-218-859-11	s	RESISTOR,CHIP 3.3K 1/16W(1608)
R543	1-218-823-11	s	RESISTOR,CHIP 100 1/16W (1608)
R544	1-218-871-11	s	RESISTOR,CHIP 10K 1/16W (1608)
R545	1-218-871-11	s	RESISTOR,CHIP 10K 1/16W (1608)
R548	1-216-849-11	s	RESISTOR,CHIP 220K 1/16W 1608
R551	1-216-845-11	s	RESISTOR,CHIP 100K 1/16W(1608)
R552	1-218-847-11	s	RESISTOR, CHIP 1K 1/16W (1608)
R553	1-216-825-11	s	RESISTOR,CHIP 2.2K 1/16W 1608
R559	1-218-871-11	s	RESISTOR,CHIP 10K 1/16W (1608)
R560	1-218-847-11	s	RESISTOR, CHIP 1K 1/16W (1608)
R561	1-218-823-11	s	RESISTOR,CHIP 100 1/16W (1608)
R563	1-218-823-11	s	RESISTOR,CHIP 100 1/16W (1608)
R564	1-218-823-11	s	RESISTOR,CHIP 100 1/16W (1608)
R565	1-218-823-11	s	RESISTOR,CHIP 100 1/16W (1608)
R568	1-218-823-11	s	RESISTOR,CHIP 100 1/16W (1608)
R569	1-218-847-11	s	RESISTOR, CHIP 1K 1/16W (1608)
R571	1-218-839-11	s	RESISTOR,CHIP 470 1/16W (1608)
R572	1-216-830-11	s	RESISTOR,CHIP 5.6K 1/16W 1608
R573	1-216-830-11	s	RESISTOR,CHIP 5.6K 1/16W 1608
R602	1-218-847-11	s	RESISTOR, CHIP 1K 1/16W (1608)
R616	1-216-849-11	s	RESISTOR,CHIP 220K 1/16W 1608
R651	1-218-847-11	s	RESISTOR, CHIP 1K 1/16W (1608)
R658	1-218-823-11	s	RESISTOR,CHIP 100 1/16W (1608)
R702	1-218-823-11	s	RESISTOR,CHIP 100 1/16W (1608)
R703	1-218-823-11	s	RESISTOR,CHIP 100 1/16W (1608)
R704	1-218-871-11	s	RESISTOR,CHIP 10K 1/16W (1608)
R705	1-218-871-11	s	RESISTOR,CHIP 10K 1/16W (1608)
R706	1-218-863-11	s	RESISTOR,CHIP 4.7K 1/16W(1608)
R707	1-218-835-11	s	RESISTOR,CHIP 330 1/16W (1608)
R708	1-216-805-11	s	RESISTOR,CHIP 47 1/16W 1608
R709	1-218-823-11	s	RESISTOR,CHIP 100 1/16W (1608)
R711	1-216-849-11	s	RESISTOR,CHIP 220K 1/16W 1608
R713	1-218-847-11	s	RESISTOR, CHIP 1K 1/16W (1608)
R715	1-216-805-11	s	RESISTOR,CHIP 47 1/16W 1608
R720	1-218-823-11	s	RESISTOR,CHIP 100 1/16W (1608)
R723	1-216-805-11	s	RESISTOR,CHIP 47 1/16W 1608
R724	1-216-805-11	s	RESISTOR,CHIP 47 1/16W 1608

(DPR-141 BOARD suffix 13 and higher)

Ref. No. or Q'ty	Part No.	SP	Description
R725	1-218-839-11	s	RESISTOR,CHIP 470 1/16W (1608)
R726	1-218-823-11	s	RESISTOR,CHIP 100 1/16W (1608)
R727	1-218-847-11	s	RESISTOR, CHIP 1K 1/16W (1608)
R728	1-218-871-11	s	RESISTOR,CHIP 10K 1/16W (1608)
R729	1-218-863-11	s	RESISTOR,CHIP 4.7K 1/16W(1608)
R730	1-216-805-11	s	RESISTOR,CHIP 47 1/16W 1608
R731	1-218-871-11	s	RESISTOR,CHIP 10K 1/16W (1608)
R732	1-216-845-11	s	RESISTOR,CHIP 100K 1/16W(1608)
R733	1-216-845-11	s	RESISTOR,CHIP 100K 1/16W(1608)
R734	1-216-849-11	s	RESISTOR,CHIP 220K 1/16W 1608
R751	1-218-823-11	s	RESISTOR,CHIP 100 1/16W (1608)
R752	1-216-845-11	s	RESISTOR,CHIP 100K 1/16W(1608)
R753	1-216-849-11	s	RESISTOR,CHIP 220K 1/16W 1608
R754	1-218-847-11	s	RESISTOR, CHIP 1K 1/16W (1608)
R755	1-216-857-11	s	RESISTOR,CHIP 1M 1/16W(1608)
R758	1-218-871-11	s	RESISTOR,CHIP 10K 1/16W (1608)
R759	1-218-847-11	s	RESISTOR, CHIP 1K 1/16W (1608)
R760	1-216-849-11	s	RESISTOR,CHIP 220K 1/16W 1608
R761	1-218-823-11	s	RESISTOR,CHIP 100 1/16W (1608)
R763	1-218-823-11	s	RESISTOR,CHIP 100 1/16W (1608)
R764	1-218-847-11	s	RESISTOR, CHIP 1K 1/16W (1608)
R765	1-218-847-11	s	RESISTOR, CHIP 1K 1/16W (1608)
R766	1-216-849-11	s	RESISTOR,CHIP 220K 1/16W 1608
R767	1-218-847-11	s	RESISTOR, CHIP 1K 1/16W (1608)
R771	1-218-823-11	s	RESISTOR,CHIP 100 1/16W (1608)
R772	1-218-823-11	s	RESISTOR,CHIP 100 1/16W (1608)
R776	1-216-849-11	s	RESISTOR,CHIP 220K 1/16W 1608
R777	1-216-849-11	s	RESISTOR,CHIP 220K 1/16W 1608
R778	1-216-849-11	s	RESISTOR,CHIP 220K 1/16W 1608
R779	1-218-847-11	s	RESISTOR, CHIP 1K 1/16W (1608)
R801	1-218-887-11	s	RESISTOR,CHIP 47K 1/16W (1608)
R802	1-218-847-11	s	RESISTOR, CHIP 1K 1/16W (1608)
R803	1-218-887-11	s	RESISTOR,CHIP 47K 1/16W (1608)
R804	1-218-847-11	s	RESISTOR, CHIP 1K 1/16W (1608)
R806	1-218-847-11	s	RESISTOR, CHIP 1K 1/16W (1608)
R808	1-218-847-11	s	RESISTOR, CHIP 1K 1/16W (1608)
R812	1-216-845-11	s	RESISTOR,CHIP 100K 1/16W(1608)
R813	1-218-887-11	s	RESISTOR,CHIP 47K 1/16W (1608)
R814	1-218-847-11	s	RESISTOR, CHIP 1K 1/16W (1608)
R815	1-216-849-11	s	RESISTOR,CHIP 220K 1/16W 1608
R816	1-216-849-11	s	RESISTOR,CHIP 220K 1/16W 1608
R817	1-218-887-11	s	RESISTOR,CHIP 47K 1/16W (1608)
R818	1-218-887-11	s	RESISTOR,CHIP 47K 1/16W (1608)
R819	1-218-887-11	s	RESISTOR,CHIP 47K 1/16W (1608)
R820	1-218-847-11	s	RESISTOR, CHIP 1K 1/16W (1608)
R821	1-218-887-11	s	RESISTOR,CHIP 47K 1/16W (1608)
R822	1-218-887-11	s	RESISTOR,CHIP 47K 1/16W (1608)
R823	1-218-887-11	s	RESISTOR,CHIP 47K 1/16W (1608)
R824	1-218-887-11	s	RESISTOR,CHIP 47K 1/16W (1608)
R825	1-218-879-11	s	RESISTOR,CHIP 22K 1/16W (1608)
R826	1-218-847-11	s	RESISTOR, CHIP 1K 1/16W (1608)
R827	1-218-883-11	s	RESISTOR,CHIP 33K 1/16W (1608)
R828	1-218-887-11	s	RESISTOR,CHIP 47K 1/16W (1608)
R829	1-216-849-11	s	RESISTOR,CHIP 220K 1/16W 1608
R830	1-218-847-11	s	RESISTOR, CHIP 1K 1/16W (1608)
R901	1-218-871-11	s	RESISTOR,CHIP 10K 1/16W (1608)
R902	1-218-871-11	s	RESISTOR,CHIP 10K 1/16W (1608)
R904	1-218-847-11	s	RESISTOR, CHIP 1K 1/16W (1608)
R906	1-218-847-11	s	RESISTOR, CHIP 1K 1/16W (1608)

(DPR-141 BOARD suffix 13 and higher)

Ref. No. or Q'ty	Part No.	SP	Description
R913	1-216-849-11	s	RESISTOR,CHIP 220K 1/16W 1608
R914	1-218-847-11	s	RESISTOR, CHIP 1K 1/16W (1608)
R916	1-218-871-11	s	RESISTOR,CHIP 10K 1/16W (1608)
R917	1-218-871-11	s	RESISTOR,CHIP 10K 1/16W (1608)
R918	1-218-871-11	s	RESISTOR,CHIP 10K 1/16W (1608)
R919	1-218-871-11	s	RESISTOR,CHIP 10K 1/16W (1608)
R920	1-218-871-11	s	RESISTOR,CHIP 10K 1/16W (1608)
R921	1-218-871-11	s	RESISTOR,CHIP 10K 1/16W (1608)
R922	1-218-871-11	s	RESISTOR,CHIP 10K 1/16W (1608)
R923	1-218-871-11	s	RESISTOR,CHIP 10K 1/16W (1608)
R924	1-218-880-11	s	RESISTOR,CHIP 24K 1/16W (1608)
R925	1-218-880-11	s	RESISTOR,CHIP 24K 1/16W (1608)
R926	1-218-880-11	s	RESISTOR,CHIP 24K 1/16W (1608)
R927	1-218-880-11	s	RESISTOR,CHIP 24K 1/16W (1608)
R928	1-218-857-11	s	RESISTOR,CHIP 2.7K 1/16W(1608)
R929	1-218-857-11	s	RESISTOR,CHIP 2.7K 1/16W(1608)
R930	1-218-857-11	s	RESISTOR,CHIP 2.7K 1/16W(1608)
R931	1-218-857-11	s	RESISTOR,CHIP 2.7K 1/16W(1608)
R932	1-218-857-11	s	RESISTOR,CHIP 2.7K 1/16W(1608)
R933	1-218-857-11	s	RESISTOR,CHIP 2.7K 1/16W(1608)
R934	1-218-860-11	s	RESISTOR,CHIP 3.6K 1/16W(1608)
R935	1-218-860-11	s	RESISTOR,CHIP 3.6K 1/16W(1608)
R936	1-218-859-11	s	RESISTOR,CHIP 3.3K 1/16W(1608)
R937	1-218-859-11	s	RESISTOR,CHIP 3.3K 1/16W(1608)
R939	1-218-871-11	s	RESISTOR,CHIP 10K 1/16W (1608)
R940	1-218-871-11	s	RESISTOR,CHIP 10K 1/16W (1608)
R941	1-218-871-11	s	RESISTOR,CHIP 10K 1/16W (1608)
R942	1-218-823-11	s	RESISTOR,CHIP 100 1/16W (1608)
R943	1-218-823-11	s	RESISTOR,CHIP 100 1/16W (1608)
R944	1-216-845-11	s	RESISTOR,CHIP 100K 1/16W(1608)
R945	1-216-845-11	s	RESISTOR,CHIP 100K 1/16W(1608)
R946	1-216-849-11	s	RESISTOR,CHIP 220K 1/16W 1608
R947	1-218-847-11	s	RESISTOR, CHIP 1K 1/16W (1608)
R958	1-218-871-11	s	RESISTOR,CHIP 10K 1/16W (1608)
R959	1-218-878-11	s	RESISTOR,CHIP 20K 1/16W (1608)
R960	1-218-887-11	s	RESISTOR,CHIP 47K 1/16W (1608)
R963	1-218-871-11	s	RESISTOR,CHIP 10K 1/16W (1608)
R964	1-218-878-11	s	RESISTOR,CHIP 20K 1/16W (1608)
R965	1-218-887-11	s	RESISTOR,CHIP 47K 1/16W (1608)
R967	1-218-871-11	s	RESISTOR,CHIP 10K 1/16W (1608)
R968	1-218-887-11	s	RESISTOR,CHIP 47K 1/16W (1608)
R970	1-218-887-11	s	RESISTOR,CHIP 47K 1/16W (1608)
R971	1-218-823-11	s	RESISTOR,CHIP 100 1/16W (1608)
R976	1-218-868-11	s	RESISTOR,CHIP 7.5K 1/16W(1608)
R977	1-218-875-11	s	RESISTOR,CHIP 15K 1/16W (1608)
R978	1-218-877-11	s	RESISTOR,CHIP 18K 1/16W (1608)
R980	1-218-868-11	s	RESISTOR,CHIP 7.5K 1/16W(1608)
R981	1-218-875-11	s	RESISTOR,CHIP 15K 1/16W (1608)
R982	1-218-877-11	s	RESISTOR,CHIP 18K 1/16W (1608)
R988	1-218-871-11	s	RESISTOR,CHIP 10K 1/16W (1608)
R989	1-218-871-11	s	RESISTOR,CHIP 10K 1/16W (1608)
R990	1-218-871-11	s	RESISTOR,CHIP 10K 1/16W (1608)
R991	1-218-871-11	s	RESISTOR,CHIP 10K 1/16W (1608)
R992	1-218-871-11	s	RESISTOR,CHIP 10K 1/16W (1608)
R993	1-218-871-11	s	RESISTOR,CHIP 10K 1/16W (1608)
R994	1-218-882-11	s	RESISTOR, CHIP 30K 1/16W(1608)
R995	1-218-882-11	s	RESISTOR, CHIP 30K 1/16W(1608)
R996	1-218-887-11	s	RESISTOR,CHIP 47K 1/16W (1608)
R997	1-218-887-11	s	RESISTOR,CHIP 47K 1/16W (1608)

(DPR-141 BOARD suffix 13 and higher)

Ref. No. or Q'ty	Part No.	SP	Description
R998	1-218-887-11	s	RESISTOR,CHIP 47K 1/16W (1608)
R999	1-218-887-11	s	RESISTOR,CHIP 47K 1/16W (1608)
R1000	1-218-887-11	s	RESISTOR,CHIP 47K 1/16W (1608)
R1001	1-218-887-11	s	RESISTOR,CHIP 47K 1/16W (1608)
R1002	1-218-823-11	s	RESISTOR,CHIP 100 1/16W (1608)
R1003	1-218-823-11	s	RESISTOR,CHIP 100 1/16W (1608)
R1004	1-218-823-11	s	RESISTOR,CHIP 100 1/16W (1608)
R1005	1-218-823-11	s	RESISTOR,CHIP 100 1/16W (1608)
R1006	1-216-797-11	s	RESISTOR,CHIP 10 1/16W 1608
R1007	1-218-837-11	s	RESISTOR,CHIP 390 1/16W (1608)
R1008	1-218-841-11	s	RESISTOR,CHIP 560 1/16W (1608)
R1009	1-218-852-11	s	RESISTOR,CHIP 1.6K 1/16W(1608)
R1010	1-218-837-11	s	RESISTOR,CHIP 390 1/16W (1608)
R1011	1-218-841-11	s	RESISTOR,CHIP 560 1/16W (1608)
R1012	1-218-852-11	s	RESISTOR,CHIP 1.6K 1/16W(1608)
R1015	1-218-887-11	s	RESISTOR,CHIP 47K 1/16W (1608)
R1016	1-218-887-11	s	RESISTOR,CHIP 47K 1/16W (1608)
R1019	1-218-887-11	s	RESISTOR,CHIP 47K 1/16W (1608)
R1020	1-218-887-11	s	RESISTOR,CHIP 47K 1/16W (1608)
RB101	1-239-409-11	s	RESISTOR NETWORK 47 (1608)
RB102	1-239-409-11	s	RESISTOR NETWORK 47 (1608)
RB103	1-239-409-11	s	RESISTOR NETWORK 47 (1608)
RB104	1-239-409-11	s	RESISTOR NETWORK 47 (1608)
RB105	1-239-409-11	s	RESISTOR NETWORK 47 (1608)
RB106	1-239-409-11	s	RESISTOR NETWORK 47 (1608)
RB107	1-239-409-11	s	RESISTOR NETWORK 47 (1608)
RB108	1-239-409-11	s	RESISTOR NETWORK 47 (1608)
RB109	1-239-409-11	s	RESISTOR NETWORK 47 (1608)
RB201	1-239-409-11	s	RESISTOR NETWORK 47 (1608)
RB202	1-236-904-11	s	RESISTOR NETWORK 1K (1608)
RB203	1-236-904-11	s	RESISTOR NETWORK 1K (1608)
RB204	1-236-908-11	s	RESISTOR,NETWORK 10K (3216)
RB205	1-236-908-11	s	RESISTOR,NETWORK 10K (3216)
RB206	1-236-908-11	s	RESISTOR,NETWORK 10K (3216)
RB207	1-236-908-11	s	RESISTOR,NETWORK 10K (3216)
RB208	1-236-908-11	s	RESISTOR,NETWORK 10K (3216)
RB209	1-236-907-11	s	RESISTOR BLOCK 100K (1608)
RB210	1-236-908-11	s	RESISTOR,NETWORK 10K (3216)
RB211	1-236-908-11	s	RESISTOR,NETWORK 10K (3216)
RB212	1-236-907-11	s	RESISTOR BLOCK 100K (1608)
RB213	1-236-908-11	s	RESISTOR,NETWORK 10K (3216)
RB214	1-239-409-11	s	RESISTOR NETWORK 47 (1608)
RB215	1-239-409-11	s	RESISTOR NETWORK 47 (1608)
RB216	1-239-409-11	s	RESISTOR NETWORK 47 (1608)
RB217	1-239-409-11	s	RESISTOR NETWORK 47 (1608)
RB218	1-239-409-11	s	RESISTOR NETWORK 47 (1608)
RB219	1-239-409-11	s	RESISTOR NETWORK 47 (1608)
RB220	1-239-409-11	s	RESISTOR NETWORK 47 (1608)
RB221	1-236-908-11	s	RESISTOR,NETWORK 10K (3216)
RB222	1-236-908-11	s	RESISTOR,NETWORK 10K (3216)
RB223	1-239-409-11	s	RESISTOR NETWORK 47 (1608)
RB224	1-236-907-11	s	RESISTOR BLOCK 100K (1608)
RB225	1-236-907-11	s	RESISTOR BLOCK 100K (1608)
RB226	1-236-907-11	s	RESISTOR BLOCK 100K (1608)
RB227	1-236-907-11	s	RESISTOR BLOCK 100K (1608)
RB228	1-236-907-11	s	RESISTOR BLOCK 100K (1608)
RB229	1-236-907-11	s	RESISTOR BLOCK 100K (1608)
RB230	1-236-907-11	s	RESISTOR BLOCK 100K (1608)
RB231	1-236-907-11	s	RESISTOR BLOCK 100K (1608)

(DPR-141 BOARD suffix 13 and higher)

Ref. No. or Q'ty	Part No.	SP	Description
RB301	1-236-904-11	s	RESISTOR NETWORK 1K (1608)
RB302	1-236-907-11	s	RESISTOR BLOCK 100K (1608)
RB303	1-239-309-11	s	RESISTOR ARRAY,CHIP 100K
RB304	1-239-419-11	s	NETWORK RESISTOR 470 (1608)
RB305	1-239-419-11	s	NETWORK RESISTOR 470 (1608)
RB306	1-239-711-11	s	NETWORK, RESISTOR 0 (1608)
RB307	1-239-711-11	s	NETWORK, RESISTOR 0 (1608)
RB501	1-236-904-11	s	RESISTOR NETWORK 1K (1608)
RB503	1-239-444-11	s	NETWORK,RESISTOR 220K (1608)
RB504	1-239-444-11	s	NETWORK,RESISTOR 220K (1608)
RB505	1-239-412-11	s	NETWORK, RESISTOR 100 (1608)
RB506	1-239-412-11	s	NETWORK, RESISTOR 100 (1608)
RB507	1-239-412-11	s	NETWORK, RESISTOR 100 (1608)
RB508	1-239-412-11	s	NETWORK, RESISTOR 100 (1608)
RB509	1-239-444-11	s	NETWORK,RESISTOR 220K (1608)
RB510	1-239-412-11	s	NETWORK, RESISTOR 100 (1608)
RB511	1-239-412-11	s	NETWORK, RESISTOR 100 (1608)
RB512	1-239-412-11	s	NETWORK, RESISTOR 100 (1608)
RB513	1-239-412-11	s	NETWORK, RESISTOR 100 (1608)
RB514	1-239-412-11	s	NETWORK, RESISTOR 100 (1608)
RB515	1-239-412-11	s	NETWORK, RESISTOR 100 (1608)
RB516	1-239-409-11	s	RESISTOR NETWORK 47 (1608)
RB517	1-239-409-11	s	RESISTOR NETWORK 47 (1608)
RB518	1-239-409-11	s	RESISTOR NETWORK 47 (1608)
RB519	1-239-409-11	s	RESISTOR NETWORK 47 (1608)
RB520	1-239-409-11	s	RESISTOR NETWORK 47 (1608)
RB521	1-239-409-11	s	RESISTOR NETWORK 47 (1608)
RB522	1-239-409-11	s	RESISTOR NETWORK 47 (1608)
RB611	1-236-904-11	s	RESISTOR NETWORK 1K (1608)
RB711	1-236-904-11	s	RESISTOR NETWORK 1K (1608)
RB712	1-236-904-11	s	RESISTOR NETWORK 1K (1608)
RB713	1-239-444-11	s	NETWORK,RESISTOR 220K (1608)
RB753	1-239-444-11	s	NETWORK,RESISTOR 220K (1608)
RB755	1-239-412-11	s	NETWORK, RESISTOR 100 (1608)
RB756	1-239-444-11	s	NETWORK,RESISTOR 220K (1608)
RB771	1-236-904-11	s	RESISTOR NETWORK 1K (1608)
RB772	1-236-904-11	s	RESISTOR NETWORK 1K (1608)
RB774	1-236-904-11	s	RESISTOR NETWORK 1K (1608)
RB775	1-236-904-11	s	RESISTOR NETWORK 1K (1608)
RB802	1-236-904-11	s	RESISTOR NETWORK 1K (1608)
TP201	1-535-757-11	s	CHIP, CHECKER (CONNECTOR)
TP501	1-535-757-11	s	CHIP, CHECKER (CONNECTOR)
TP502	1-535-757-11	s	CHIP, CHECKER (CONNECTOR)
TP503	1-535-757-11	s	CHIP, CHECKER (CONNECTOR)
TP712	1-535-757-11	s	CHIP, CHECKER (CONNECTOR)
X401	1-767-695-21	s	OSCILLATOR, CRYSTAL
X711	1-760-654-21	s	VIBRATOR, CRYSTAL
X751	1-760-655-21	s	VIBRATOR, CRYSTAL

DPR-141 BOARD suffix 11

Ref. No. or Q'ty	Part No.	SP	Description
*1-*9			For DSR-500WS/500WSP
*1			Serial No. 10001-10020(UC), 30001-30010(J), 40001-40020(CE)
*2			Serial No. 10021-(UC), 30011-(J), 40021-(CE)
*3			Serial No. 10001-10560(UC), 30001-30160(J), 40001-40270(CE)
*4			Serial No. 10561-12000(UC), 30161-32000(J), 40271-40735(CE)
*5			Serial No. 10001-10850(UC), 30001-30265(J), 40001-40480(CE)
*6			Serial No. 10851-(UC), 30266-(J), 40481-(CE)
*7			Serial No. 10001-12000(UC), 30001-32000(J), 40001-40735(CE)
*8			Serial No. 12001-(UC), 32001-(J), 40736-(CE)
*9			Serial No. 10001-12000(UC), 30001-32000(J), 40001-40850(CE)
1pc	A-8322-183-A	s	MOUNTED CIRCUIT BOARD, DPR-141
1pc *9	3-603-737-01	o	LEVER,BOARD
5pcs	3-729-013-41	s	SCREW(M1.4X3.5),WASHERHEAD(+P)
4pcs	7-622-205-05	s	NUT M2 TYPE2
4pcs	7-628-253-20	s	SCREW +PS 2X6
C101	1-164-156-11	s	CERAMIC, CHIP 0.1uF 25V
C102	1-164-156-11	s	CERAMIC, CHIP 0.1uF 25V
C103	1-164-156-11	s	CERAMIC, CHIP 0.1uF 25V
C104	1-164-156-11	s	CERAMIC, CHIP 0.1uF 25V
C105	1-164-156-11	s	CERAMIC, CHIP 0.1uF 25V
C106	1-135-180-21	s	TANTALUM, CHIP 33uF 10% 10V
C107	1-107-689-21	s	TANTALUM, CHIP 1uF 20% 35V
C108	1-104-823-11	s	TANTALUM, CHIP 47uF 20% 16V
C109	1-164-156-11	s	CERAMIC, CHIP 0.1uF 25V
C110	1-135-180-21	s	TANTALUM, CHIP 33uF 10% 10V
C111	1-113-682-11	s	TANTALUM, CHIP 33uF 20% 10V
C112	1-164-156-11	s	CERAMIC, CHIP 0.1uF 25V
C113	1-164-156-11	s	CERAMIC, CHIP 0.1uF 25V
C114	1-164-156-11	s	CERAMIC, CHIP 0.1uF 25V
C115	1-164-156-11	s	CERAMIC, CHIP 0.1uF 25V
C116	1-135-180-21	s	TANTALUM, CHIP 33uF 10% 10V
C117	1-135-180-21	s	TANTALUM, CHIP 33uF 10% 10V
C118	1-113-682-11	s	TANTALUM, CHIP 33uF 20% 10V
C119	1-113-682-11	s	TANTALUM, CHIP 33uF 20% 10V
C120	1-135-177-21	s	TANTALUM, CHIP 1uF 10% 25V
C121	1-135-177-21	s	TANTALUM, CHIP 1uF 10% 25V
C122	1-164-156-11	s	CERAMIC, CHIP 0.1uF 25V
C123	1-104-851-11	s	TANTALUM, CHIP 10uF 20% 10V
C124	1-164-156-11	s	CERAMIC, CHIP 0.1uF 25V
C125	1-164-156-11	s	CERAMIC, CHIP 0.1uF 25V
C131	1-164-156-11	s	CERAMIC, CHIP 0.1uF 25V
C133	1-164-156-11	s	CERAMIC, CHIP 0.1uF 25V
C134	1-162-921-11	s	CERAMIC, CHIP 33PF 5% 50V
C135	1-113-682-11	s	TANTALUM, CHIP 33uF 20% 10V
C136	1-164-156-11	s	CERAMIC, CHIP 0.1uF 25V
C137	1-107-686-11	s	TANTALUM, CHIP 4.7uF 20% 16V
C138	1-164-156-11	s	CERAMIC, CHIP 0.1uF 25V
C139	1-107-686-11	s	TANTALUM, CHIP 4.7uF 20% 16V
C140	1-164-156-11	s	CERAMIC, CHIP 0.1uF 25V
C141	1-164-156-11	s	CERAMIC, CHIP 0.1uF 25V
C142	1-164-156-11	s	CERAMIC, CHIP 0.1uF 25V
C143	1-164-156-11	s	CERAMIC, CHIP 0.1uF 25V
C144	1-164-156-11	s	CERAMIC, CHIP 0.1uF 25V
C145	1-110-569-11	s	TANTALUM, CHIP 47uF 20% 6.3V
C146	1-162-921-11	s	CERAMIC, CHIP 33PF 5% 50V
C147	1-113-682-11	s	TANTALUM, CHIP 33uF 20% 10V
C148	1-164-156-11	s	CERAMIC, CHIP 0.1uF 25V
C149	1-107-686-11	s	TANTALUM, CHIP 4.7uF 20% 16V
C150	1-164-156-11	s	CERAMIC, CHIP 0.1uF 25V
C151	1-107-686-11	s	TANTALUM, CHIP 4.7uF 20% 16V

(DPR-141 BOARD suffix 11)

Ref. No. or Q'ty	Part No.	SP	Description
C152	1-164-156-11	s	CERAMIC, CHIP 0.1uF 25V
C153	1-164-156-11	s	CERAMIC, CHIP 0.1uF 25V
C154	1-164-156-11	s	CERAMIC, CHIP 0.1uF 25V
C155	1-164-156-11	s	CERAMIC, CHIP 0.1uF 25V
C156	1-164-156-11	s	CERAMIC, CHIP 0.1uF 25V
C157	1-110-569-11	s	TANTALUM, CHIP 47uF 20% 6.3V
C158	1-162-921-11	s	CERAMIC, CHIP 33PF 5% 50V
C159	1-113-682-11	s	TANTALUM, CHIP 33uF 20% 10V
C160	1-164-156-11	s	CERAMIC, CHIP 0.1uF 25V
C161	1-107-686-11	s	TANTALUM, CHIP 4.7uF 20% 16V
C162	1-164-156-11	s	CERAMIC, CHIP 0.1uF 25V
C163	1-107-686-11	s	TANTALUM, CHIP 4.7uF 20% 16V
C164	1-164-156-11	s	CERAMIC, CHIP 0.1uF 25V
C165	1-164-156-11	s	CERAMIC, CHIP 0.1uF 25V
C166	1-164-156-11	s	CERAMIC, CHIP 0.1uF 25V
C167	1-164-156-11	s	CERAMIC, CHIP 0.1uF 25V
C168	1-164-156-11	s	CERAMIC, CHIP 0.1uF 25V
C169	1-110-569-11	s	TANTALUM, CHIP 47uF 20% 6.3V
C201	1-164-156-11	s	CERAMIC, CHIP 0.1uF 25V
C202	1-110-569-11	s	TANTALUM, CHIP 47uF 20% 6.3V
C204	1-164-156-11	s	CERAMIC, CHIP 0.1uF 25V
C209	1-113-682-11	s	TANTALUM, CHIP 33uF 20% 10V
C210	1-113-682-11	s	TANTALUM, CHIP 33uF 20% 10V
C211	1-164-156-11	s	CERAMIC, CHIP 0.1uF 25V
C212	1-164-156-11	s	CERAMIC, CHIP 0.1uF 25V
C213	1-164-156-11	s	CERAMIC, CHIP 0.1uF 25V
C214	1-164-156-11	s	CERAMIC, CHIP 0.1uF 25V
C215	1-164-156-11	s	CERAMIC, CHIP 0.1uF 25V
C216	1-164-156-11	s	CERAMIC, CHIP 0.1uF 25V
C220	1-164-156-11	s	CERAMIC, CHIP 0.1uF 25V
C221	1-113-682-11	s	TANTALUM, CHIP 33uF 20% 10V
C222	1-113-682-11	s	TANTALUM, CHIP 33uF 20% 10V
C223	1-113-682-11	s	TANTALUM, CHIP 33uF 20% 10V
C224	1-104-851-11	s	TANTALUM, CHIP 10uF 20% 10V
C225	1-104-851-11	s	TANTALUM, CHIP 10uF 20% 10V
C226	1-104-851-11	s	TANTALUM, CHIP 10uF 20% 10V
C229	*7 1-162-919-11	s	CERAMIC, CHIP 22PF 5% 50V
C231	1-164-156-11	s	CERAMIC, CHIP 0.1uF 25V
C232	1-164-156-11	s	CERAMIC, CHIP 0.1uF 25V
C233	1-164-156-11	s	CERAMIC, CHIP 0.1uF 25V
C234	1-164-156-11	s	CERAMIC, CHIP 0.1uF 25V
C235	1-110-569-11	s	TANTALUM, CHIP 47uF 20% 6.3V
C236	1-110-569-11	s	TANTALUM, CHIP 47uF 20% 6.3V
C237	1-110-569-11	s	TANTALUM, CHIP 47uF 20% 6.3V
C238	1-164-156-11	s	CERAMIC, CHIP 0.1uF 25V
C239	1-164-156-11	s	CERAMIC, CHIP 0.1uF 25V
C240	1-110-569-11	s	TANTALUM, CHIP 47uF 20% 6.3V
C241	1-164-156-11	s	CERAMIC, CHIP 0.1uF 25V
C242	1-164-156-11	s	CERAMIC, CHIP 0.1uF 25V
C243	1-164-156-11	s	CERAMIC, CHIP 0.1uF 25V
C244	1-164-156-11	s	CERAMIC, CHIP 0.1uF 25V
C245	1-164-156-11	s	CERAMIC, CHIP 0.1uF 25V
C246	1-164-156-11	s	CERAMIC, CHIP 0.1uF 25V
C247	1-164-156-11	s	CERAMIC, CHIP 0.1uF 25V
C248	1-110-569-11	s	TANTALUM, CHIP 47uF 20% 6.3V
C249	1-110-569-11	s	TANTALUM, CHIP 47uF 20% 6.3V
C250	1-164-156-11	s	CERAMIC, CHIP 0.1uF 25V
C251	1-110-569-11	s	TANTALUM, CHIP 47uF 20% 6.3V
C252	1-110-569-11	s	TANTALUM, CHIP 47uF 20% 6.3V
C253	1-162-919-11	s	CERAMIC, CHIP 22PF 5% 50V

(DPR-141 BOARD suffix 11)

Ref. No. or Q'ty	Part No.	SP	Description
C255	1-162-962-11	s	CERAMIC, CHIP 470PF 10% 50V
C256	1-162-962-11	s	CERAMIC, CHIP 470PF 10% 50V
C257	1-164-156-11	s	CERAMIC, CHIP 0.1uF 25V
C258	1-164-156-11	s	CERAMIC, CHIP 0.1uF 25V
C301	1-110-569-11	s	TANTALUM, CHIP 47uF 20% 6.3V
C302	1-164-156-11	s	CERAMIC, CHIP 0.1uF 25V
C303	1-164-156-11	s	CERAMIC, CHIP 0.1uF 25V
C304	1-113-682-11	s	TANTALUM, CHIP 33uF 20% 10V
C305	1-164-156-11	s	CERAMIC, CHIP 0.1uF 25V
C306	1-164-156-11	s	CERAMIC, CHIP 0.1uF 25V
C307	1-164-156-11	s	CERAMIC, CHIP 0.1uF 25V
C308	1-164-156-11	s	CERAMIC, CHIP 0.1uF 25V
C309	1-162-968-11	s	CERAMIC, CHIP 0.0047uF 10% 50V
C310	1-164-156-11	s	CERAMIC, CHIP 0.1uF 25V
C311	1-162-966-11	s	CERAMIC, CHIP 0.0022uF 10% 50V
C312	1-162-923-11	s	CERAMIC, CHIP 47PF 5% 50V
C313	1-162-923-11	s	CERAMIC, CHIP 47PF 5% 50V
C314	1-164-156-11	s	CERAMIC, CHIP 0.1uF 25V
C315	1-164-156-11	s	CERAMIC, CHIP 0.1uF 25V
C316	1-164-156-11	s	CERAMIC, CHIP 0.1uF 25V
C317	1-164-156-11	s	CERAMIC, CHIP 0.1uF 25V
C318	1-164-156-11	s	CERAMIC, CHIP 0.1uF 25V
C319	1-113-682-11	s	TANTALUM, CHIP 33uF 20% 10V
C320	1-164-156-11	s	CERAMIC, CHIP 0.1uF 25V
C321	1-113-682-11	s	TANTALUM, CHIP 33uF 20% 10V
C322	1-164-156-11	s	CERAMIC, CHIP 0.1uF 25V
C323	1-164-156-11	s	CERAMIC, CHIP 0.1uF 25V
C324	1-164-156-11	s	CERAMIC, CHIP 0.1uF 25V
C325	1-162-910-11	s	CERAMIC, CHIP 5PF 50V
C326	1-164-156-11	s	CERAMIC, CHIP 0.1uF 25V
C327	1-164-156-11	s	CERAMIC, CHIP 0.1uF 25V
C328	1-162-915-11	s	CERAMIC, CHIP 10PF 50V
C330	1-164-156-11	s	CERAMIC, CHIP 0.1uF 25V
C331	1-162-920-11	s	CERAMIC, CHIP 27PF 5% 50V
C333	1-164-156-11	s	CERAMIC, CHIP 0.1uF 25V
C334	1-162-910-11	s	CERAMIC, CHIP 5PF 50V
C335	1-164-156-11	s	CERAMIC, CHIP 0.1uF 25V
C336	1-164-156-11	s	CERAMIC, CHIP 0.1uF 25V
C337	1-162-915-11	s	CERAMIC, CHIP 10PF 50V
C339	1-164-156-11	s	CERAMIC, CHIP 0.1uF 25V
C340	1-162-920-11	s	CERAMIC, CHIP 27PF 5% 50V
C342	1-113-682-11	s	TANTALUM, CHIP 33uF 20% 10V
C343	1-113-682-11	s	TANTALUM, CHIP 33uF 20% 10V
C344	1-162-910-11	s	CERAMIC, CHIP 5PF 50V
C345	1-164-156-11	s	CERAMIC, CHIP 0.1uF 25V
C346	1-164-156-11	s	CERAMIC, CHIP 0.1uF 25V
C347	1-162-915-11	s	CERAMIC, CHIP 10PF 50V
C349	1-164-156-11	s	CERAMIC, CHIP 0.1uF 25V
C350	1-162-920-11	s	CERAMIC, CHIP 27PF 5% 50V
C352	1-164-156-11	s	CERAMIC, CHIP 0.1uF 25V
C353	1-164-156-11	s	CERAMIC, CHIP 0.1uF 25V
C354	1-164-156-11	s	CERAMIC, CHIP 0.1uF 25V
C355	1-164-156-11	s	CERAMIC, CHIP 0.1uF 25V
C357	1-164-156-11	s	CERAMIC, CHIP 0.1uF 25V
C358	1-164-156-11	s	CERAMIC, CHIP 0.1uF 25V
C359	1-110-569-11	s	TANTALUM, CHIP 47uF 20% 6.3V
C360	1-164-156-11	s	CERAMIC, CHIP 0.1uF 25V
C361	1-110-569-11	s	TANTALUM, CHIP 47uF 20% 6.3V
C362	1-164-156-11	s	CERAMIC, CHIP 0.1uF 25V
C363	1-110-569-11	s	TANTALUM, CHIP 47uF 20% 6.3V

(DPR-141 BOARD suffix 11)

Ref. No. or Q'ty	Part No.	SP	Description
C364	1-164-156-11	s	CERAMIC, CHIP 0.1uF 25V
C365	1-110-569-11	s	TANTALUM, CHIP 47uF 20% 6.3V
C366	1-164-156-11	s	CERAMIC, CHIP 0.1uF 25V
C367	1-110-569-11	s	TANTALUM, CHIP 47uF 20% 6.3V
C368	1-164-156-11	s	CERAMIC, CHIP 0.1uF 25V
C369	1-110-569-11	s	TANTALUM, CHIP 47uF 20% 6.3V
C370	1-164-156-11	s	CERAMIC, CHIP 0.1uF 25V
C371	1-110-569-11	s	TANTALUM, CHIP 47uF 20% 6.3V
C372	1-164-156-11	s	CERAMIC, CHIP 0.1uF 25V
C373	1-110-569-11	s	TANTALUM, CHIP 47uF 20% 6.3V
C374	1-113-682-11	s	TANTALUM, CHIP 33uF 20% 10V
C375	1-113-682-11	s	TANTALUM, CHIP 33uF 20% 10V
C376	1-164-156-11	s	CERAMIC, CHIP 0.1uF 25V
C377	1-164-156-11	s	CERAMIC, CHIP 0.1uF 25V
C378	1-164-156-11	s	CERAMIC, CHIP 0.1uF 25V
C379	1-164-156-11	s	CERAMIC, CHIP 0.1uF 25V
C380	1-107-685-11	s	TANTALUM, CHIP 15uF 20% 6.3V
C381	1-164-156-11	s	CERAMIC, CHIP 0.1uF 25V
C382	1-164-156-11	s	CERAMIC, CHIP 0.1uF 25V
C383	1-113-682-11	s	TANTALUM, CHIP 33uF 20% 10V
C384	1-164-156-11	s	CERAMIC, CHIP 0.1uF 25V
C385	1-164-156-11	s	CERAMIC, CHIP 0.1uF 25V
C386	1-113-682-11	s	TANTALUM, CHIP 33uF 20% 10V
C387	1-164-156-11	s	CERAMIC, CHIP 0.1uF 25V
C388	1-164-156-11	s	CERAMIC, CHIP 0.1uF 25V
C389	1-164-156-11	s	CERAMIC, CHIP 0.1uF 25V
C390	1-162-923-11	s	CERAMIC, CHIP 47PF 10% 25V
C391	1-104-851-11	s	TANTALUM, CHIP 10uF 20% 10V
C392	1-164-156-11	s	CERAMIC, CHIP 0.1uF 25V
C393	1-164-156-11	s	CERAMIC, CHIP 0.1uF 25V
C394	1-164-156-11	s	CERAMIC, CHIP 0.1uF 25V
C395	1-164-156-11	s	CERAMIC, CHIP 0.1uF 25V
C396	1-164-156-11	s	CERAMIC, CHIP 0.1uF 25V
C397	1-164-156-11	s	CERAMIC, CHIP 0.1uF 25V
C398	1-164-156-11	s	CERAMIC, CHIP 0.1uF 25V
C399	1-164-156-11	s	CERAMIC, CHIP 0.1uF 25V
C400	1-164-156-11	s	CERAMIC, CHIP 0.1uF 25V
C401	1-113-682-11	s	TANTALUM, CHIP 33uF 20% 10V
C402	1-113-682-11	s	TANTALUM, CHIP 33uF 20% 10V
C403	1-164-156-11	s	CERAMIC, CHIP 0.1uF 25V
C404	1-164-156-11	s	CERAMIC, CHIP 0.1uF 25V
C408	1-162-919-11	s	CERAMIC, CHIP 22PF 5% 50V
C501	1-164-156-11	s	CERAMIC, CHIP 0.1uF 25V
C502	1-164-156-11	s	CERAMIC, CHIP 0.1uF 25V
C503	1-164-156-11	s	CERAMIC, CHIP 0.1uF 25V
C504	1-164-156-11	s	CERAMIC, CHIP 0.1uF 25V
C507	1-164-315-11	s	CERAMIC, CHIP 470PF 5% 50V
C508	1-162-964-11	s	CERAMIC, CHIP 0.001uF 10% 50V
C509	1-162-922-11	s	CERAMIC, CHIP 39PF 5% 50V
C510	1-162-964-11	s	CERAMIC, CHIP 0.001uF 10% 50V
C511	1-162-964-11	s	CERAMIC, CHIP 0.001uF 10% 50V
C512	1-113-682-11	s	TANTALUM, CHIP 33uF 20% 10V
C513	1-164-156-11	s	CERAMIC, CHIP 0.1uF 25V
C514	1-164-156-11	s	CERAMIC, CHIP 0.1uF 25V
C515	1-113-682-11	s	TANTALUM, CHIP 33uF 20% 10V
C516	1-164-156-11	s	CERAMIC, CHIP 0.1uF 25V
C517	1-164-156-11	s	CERAMIC, CHIP 0.1uF 25V
C518	1-164-156-11	s	CERAMIC, CHIP 0.1uF 25V
C521	1-164-156-11	s	CERAMIC, CHIP 0.1uF 25V
C522	1-110-569-11	s	TANTALUM, CHIP 47uF 20% 6.3V

(DPR-141 BOARD suffix 11)

Ref. No. or Q'ty	Part No.	SP	Description
C523	1-164-156-11	s	CERAMIC, CHIP 0.1uF 25V
C524	1-164-156-11	s	CERAMIC, CHIP 0.1uF 25V
C527	1-164-156-11	s	CERAMIC, CHIP 0.1uF 25V
C528	1-164-156-11	s	CERAMIC, CHIP 0.1uF 25V
C529	1-164-315-11	s	CERAMIC, CHIP 470PF 5% 50V
C530	1-164-156-11	s	CERAMIC, CHIP 0.1uF 25V
C531	1-164-156-11	s	CERAMIC, CHIP 0.1uF 25V
C532	1-110-569-11	s	TANTALUM, CHIP 47uF 20% 6.3V
C534	1-164-156-11	s	CERAMIC, CHIP 0.1uF 25V
C535	1-164-156-11	s	CERAMIC, CHIP 0.1uF 25V
C536	1-164-156-11	s	CERAMIC, CHIP 0.1uF 25V
C537	1-164-156-11	s	CERAMIC, CHIP 0.1uF 25V
C539	1-164-156-11	s	CERAMIC, CHIP 0.1uF 25V
C546	1-164-156-11	s	CERAMIC, CHIP 0.1uF 25V
C547	1-164-156-11	s	CERAMIC, CHIP 0.1uF 25V
C548	1-162-922-11	s	CERAMIC, CHIP 39PF 5% 50V
C549	1-162-922-11	s	CERAMIC, CHIP 39PF 5% 50V
C601	1-164-156-11	s	CERAMIC, CHIP 0.1uF 25V
C603	1-110-569-11	s	TANTALUM, CHIP 47uF 20% 6.3V
C604	1-164-156-11	s	CERAMIC, CHIP 0.1uF 25V
C605	1-164-315-11	s	CERAMIC, CHIP 470PF 5% 50V
C606	1-164-315-11	s	CERAMIC, CHIP 470PF 5% 50V
C611	1-164-156-11	s	CERAMIC, CHIP 0.1uF 25V
C612	1-164-156-11	s	CERAMIC, CHIP 0.1uF 25V
C613	1-164-156-11	s	CERAMIC, CHIP 0.1uF 25V
C614	1-110-569-11	s	TANTALUM, CHIP 47uF 20% 6.3V
C615	1-164-156-11	s	CERAMIC, CHIP 0.1uF 25V
C621	1-110-569-11	s	TANTALUM, CHIP 47uF 20% 6.3V
C622	1-164-156-11	s	CERAMIC, CHIP 0.1uF 25V
C623	1-164-156-11	s	CERAMIC, CHIP 0.1uF 25V
C631	1-110-569-11	s	TANTALUM, CHIP 47uF 20% 6.3V
C632	1-164-156-11	s	CERAMIC, CHIP 0.1uF 25V
C633	1-164-156-11	s	CERAMIC, CHIP 0.1uF 25V
C651	1-164-156-11	s	CERAMIC, CHIP 0.1uF 25V
C652	1-164-156-11	s	CERAMIC, CHIP 0.1uF 25V
C653	1-164-156-11	s	CERAMIC, CHIP 0.1uF 25V
C654	1-110-569-11	s	TANTALUM, CHIP 47uF 20% 6.3V
C655	1-164-156-11	s	CERAMIC, CHIP 0.1uF 25V
C656	1-164-315-11	s	CERAMIC, CHIP 470PF 5% 50V
C657	1-164-156-11	s	CERAMIC, CHIP 0.1uF 25V
C658	1-164-156-11	s	CERAMIC, CHIP 0.1uF 25V
C701	1-162-964-11	s	CERAMIC, CHIP 0.001uF 10% 50V
C702	1-162-964-11	s	CERAMIC, CHIP 0.001uF 10% 50V
C703	1-162-964-11	s	CERAMIC, CHIP 0.001uF 10% 50V
C704	1-165-176-11	s	CERAMIC, CHIP 0.047uF 10% 16V
C705	1-135-149-21	s	TANTALUM, CHIP 2.2uF 10% 10V
C711 *1	1-162-909-11	s	CERAMIC, CHIP 4PF 0.25PF 50V
*2	1-162-910-11	s	CERAMIC, CHIP 5PF 0.25PF 50V
C712 *1	1-162-909-11	s	CERAMIC, CHIP 4PF 0.25PF 50V
*2	1-162-910-11	s	CERAMIC, CHIP 5PF 0.25PF 50V
C714	1-164-156-11	s	CERAMIC, CHIP 0.1uF 25V
C715	1-110-569-11	s	TANTALUM, CHIP 47uF 20% 6.3V
C716	1-164-156-11	s	CERAMIC, CHIP 0.1uF 25V
C717	1-164-315-11	s	CERAMIC, CHIP 470PF 5% 50V
C727	1-164-156-11	s	CERAMIC, CHIP 0.1uF 25V
C728	1-164-156-11	s	CERAMIC, CHIP 0.1uF 25V
C731	1-162-966-11	s	CERAMIC, CHIP 0.0022uF 10% 50V
C732	1-162-964-11	s	CERAMIC, CHIP 0.001uF 10% 50V
C733	1-165-176-11	s	CERAMIC, CHIP 0.047uF 10% 16V
C734	1-162-964-11	s	CERAMIC, CHIP 0.001uF 10% 50V

(DPR-141 BOARD suffix 11)

Ref. No. or Q'ty	Part No.	SP	Description
C735	1-162-964-11	s	CERAMIC, CHIP 0.001uF 10% 50V
C736	1-135-149-21	s	TANTALUM, CHIP 2.2uF 10% 10V
C751	1-110-569-11	s	TANTALUM, CHIP 47uF 20% 6.3V
C752	1-164-156-11	s	CERAMIC, CHIP 0.1uF 25V
C753	1-164-315-11	s	CERAMIC, CHIP 470PF 5% 50V
C754	1-162-915-11	s	CERAMIC, CHIP 10PF 50V
C755	1-162-915-11	s	CERAMIC, CHIP 10PF 50V
C756	1-164-156-11	s	CERAMIC, CHIP 0.1uF 25V
C757	1-164-156-11	s	CERAMIC, CHIP 0.1uF 25V
C758	1-164-156-11	s	CERAMIC, CHIP 0.1uF 25V
C759	1-164-315-11	s	CERAMIC, CHIP 470PF 5% 50V
C771	1-164-156-11	s	CERAMIC, CHIP 0.1uF 25V
C772	1-110-569-11	s	TANTALUM, CHIP 47uF 20% 6.3V
C773	1-164-156-11	s	CERAMIC, CHIP 0.1uF 25V
C774	1-164-156-11	s	CERAMIC, CHIP 0.1uF 25V
C775	1-164-156-11	s	CERAMIC, CHIP 0.1uF 25V
C776	1-164-315-11	s	CERAMIC, CHIP 470PF 5% 50V
C777	1-164-156-11	s	CERAMIC, CHIP 0.1uF 25V
C778	1-164-156-11	s	CERAMIC, CHIP 0.1uF 25V
C779	1-164-156-11	s	CERAMIC, CHIP 0.1uF 25V
C780	1-110-569-11	s	TANTALUM, CHIP 47uF 20% 6.3V
C781	1-164-156-11	s	CERAMIC, CHIP 0.1uF 25V
C782	1-164-156-11	s	CERAMIC, CHIP 0.1uF 25V
C783	1-164-156-11	s	CERAMIC, CHIP 0.1uF 25V
C784	1-110-569-11	s	TANTALUM, CHIP 47uF 20% 6.3V
C785	1-164-315-11	s	CERAMIC, CHIP 470PF 5% 50V
C786	1-164-156-11	s	CERAMIC, CHIP 0.1uF 25V
C801	1-164-156-11	s	CERAMIC, CHIP 0.1uF 25V
C802	1-164-156-11	s	CERAMIC, CHIP 0.1uF 25V
C803	1-110-569-11	s	TANTALUM, CHIP 47uF 20% 6.3V
C804	1-164-156-11	s	CERAMIC, CHIP 0.1uF 25V
C805	1-164-156-11	s	CERAMIC, CHIP 0.1uF 25V
C806	1-113-682-11	s	TANTALUM, CHIP 33uF 20% 10V
C807	1-164-156-11	s	CERAMIC, CHIP 0.1uF 25V
C808	1-164-315-11	s	CERAMIC, CHIP 470PF 5% 50V
C809	1-164-156-11	s	CERAMIC, CHIP 0.1uF 25V
C810	1-164-156-11	s	CERAMIC, CHIP 0.1uF 25V
C811	1-164-156-11	s	CERAMIC, CHIP 0.1uF 25V
C812	1-164-156-11	s	CERAMIC, CHIP 0.1uF 25V
C813	1-164-156-11	s	CERAMIC, CHIP 0.1uF 25V
C814	1-164-156-11	s	CERAMIC, CHIP 0.1uF 25V
C815	1-164-156-11	s	CERAMIC, CHIP 0.1uF 25V
C816	1-164-156-11	s	CERAMIC, CHIP 0.1uF 25V
C817	1-162-964-11	s	CERAMIC, CHIP 0.001uF 10% 50V
C818	1-162-964-11	s	CERAMIC, CHIP 0.001uF 10% 50V
C819	1-164-156-11	s	CERAMIC, CHIP 0.1uF 25V
C821	1-109-994-11	s	CERAMIC 2.2uF 10% 10V
C822	1-164-156-11	s	CERAMIC, CHIP 0.1uF 25V
C823	1-164-315-11	s	CERAMIC, CHIP 470PF 5% 50V
C824	1-164-156-11	s	CERAMIC, CHIP 0.1uF 25V
C825	1-162-927-11	s	CERAMIC, CHIP 100PF 5% 50V
C826	1-110-569-11	s	TANTALUM, CHIP 47uF 20% 6.3V
C827	1-164-156-11	s	CERAMIC, CHIP 0.1uF 25V
C828	1-164-156-11	s	CERAMIC, CHIP 0.1uF 25V
C829	1-104-823-11	s	TANTALUM, CHIP 47uF 20% 16V
C830	1-107-689-21	s	TANTALUM, CHIP 1uF 20% 35V
C831	1-164-156-11	s	CERAMIC, CHIP 0.1uF 25V
C832	1-164-156-11	s	CERAMIC, CHIP 0.1uF 25V
C833	1-113-682-11	s	TANTALUM, CHIP 33uF 20% 10V
C834	1-164-315-11	s	CERAMIC, CHIP 470PF 5% 50V

(DPR-141 BOARD suffix 11)

Ref. No. or Q'ty	Part No.	SP	Description
C835	1-164-156-11	s	CERAMIC, CHIP 0.1uF 25V
C836	1-164-156-11	s	CERAMIC, CHIP 0.1uF 25V
C837	1-110-569-11	s	TANTALUM, CHIP 47uF 20% 6.3V
C901	1-164-156-11	s	CERAMIC, CHIP 0.1uF 25V
C902	1-164-156-11	s	CERAMIC, CHIP 0.1uF 25V
C903	1-113-682-11	s	TANTALUM, CHIP 33uF 20% 10V
C904	1-113-682-11	s	TANTALUM, CHIP 33uF 20% 10V
C905	1-110-569-11	s	TANTALUM, CHIP 47uF 20% 6.3V
C906	1-110-569-11	s	TANTALUM, CHIP 47uF 20% 6.3V
C907	1-104-852-11	s	TANTALUM, CHIP 22uF 20% 10V
C908	1-104-852-11	s	TANTALUM, CHIP 22uF 20% 10V
C909	1-110-569-11	s	TANTALUM, CHIP 47uF 20% 6.3V
C910	1-162-927-11	s	CERAMIC, CHIP 100PF 5% 50V
C911	1-110-569-11	s	TANTALUM, CHIP 47uF 20% 6.3V
C912	1-162-927-11	s	CERAMIC, CHIP 100PF 5% 50V
C913	1-164-230-11	s	CERAMIC 220PF 5% 50V
C914	1-164-230-11	s	CERAMIC 220PF 5% 50V
C915	1-113-682-11	s	TANTALUM, CHIP 33uF 20% 10V
C916	1-104-547-11	s	FILM, CHIP 0.0047uF 5% 16V
C917	1-104-547-11	s	FILM, CHIP 0.0047uF 5% 16V
C918	1-110-569-11	s	TANTALUM, CHIP 47uF 20% 6.3V
C919	1-104-547-11	s	FILM, CHIP 0.0047uF 5% 16V
C920	1-104-547-11	s	FILM, CHIP 0.0047uF 5% 16V
C921	1-113-682-11	s	TANTALUM, CHIP 33uF 20% 10V
C922	1-113-682-11	s	TANTALUM, CHIP 33uF 20% 10V
C923	1-164-156-11	s	CERAMIC, CHIP 0.1uF 25V
C924	1-113-682-11	s	TANTALUM, CHIP 33uF 20% 10V
C925	1-164-156-11	s	CERAMIC, CHIP 0.1uF 25V
C926	1-164-156-11	s	CERAMIC, CHIP 0.1uF 25V
C927	1-164-156-11	s	CERAMIC, CHIP 0.1uF 25V
C928	1-164-156-11	s	CERAMIC, CHIP 0.1uF 25V
C929	1-164-156-11	s	CERAMIC, CHIP 0.1uF 25V
C930	1-164-156-11	s	CERAMIC, CHIP 0.1uF 25V
C931	1-162-927-11	s	CERAMIC, CHIP 100PF 5% 50V
C932	1-162-927-11	s	CERAMIC, CHIP 100PF 5% 50V
C933	1-162-927-11	s	CERAMIC, CHIP 100PF 5% 50V
C934	1-162-927-11	s	CERAMIC, CHIP 100PF 5% 50V
C935	1-162-927-11	s	CERAMIC, CHIP 100PF 5% 50V
C936	1-162-927-11	s	CERAMIC, CHIP 100PF 5% 50V
C937	1-162-927-11	s	CERAMIC, CHIP 100PF 5% 50V
C938	1-162-927-11	s	CERAMIC, CHIP 100PF 5% 50V
C939	1-104-546-11	s	FILM 0.0039uF 5% 16V
C940	1-104-546-11	s	FILM 0.0039uF 5% 16V
C941	1-164-392-11	s	CERAMIC, CHIP 390PF 5% 50V
C942	1-164-392-11	s	CERAMIC, CHIP 390PF 5% 50V
C943	1-162-915-11	s	CERAMIC, CHIP 10PF 50V
C944	1-162-915-11	s	CERAMIC, CHIP 10PF 50V
C945	1-162-959-11	s	CERAMIC, CHIP 330PF 5% 50V
C946	1-162-959-11	s	CERAMIC, CHIP 330PF 5% 50V
C947	1-162-927-11	s	CERAMIC, CHIP 100PF 5% 50V
C948	1-162-927-11	s	CERAMIC, CHIP 100PF 5% 50V
C949	1-164-156-11	s	CERAMIC, CHIP 0.1uF 25V
C950	1-164-156-11	s	CERAMIC, CHIP 0.1uF 25V
C951	1-113-682-11	s	TANTALUM, CHIP 33uF 20% 10V
C952	1-113-682-11	s	TANTALUM, CHIP 33uF 20% 10V
C954	1-164-156-11	s	CERAMIC, CHIP 0.1uF 25V
C955	1-164-156-11	s	CERAMIC, CHIP 0.1uF 25V
C956	1-110-569-11	s	TANTALUM, CHIP 47uF 20% 6.3V
C957	1-113-682-11	s	TANTALUM, CHIP 33uF 20% 10V
C958	1-113-682-11	s	TANTALUM, CHIP 33uF 20% 10V

(DPR-141 BOARD suffix 11)

Ref. No. or Q'ty	Part No.	SP	Description
C959	1-164-315-11	s	CERAMIC, CHIP 470PF 5% 50V
C960	1-164-315-11	s	CERAMIC, CHIP 470PF 5% 50V
C961	1-164-156-11	s	CERAMIC, CHIP 0.1uF 25V
C962	1-164-156-11	s	CERAMIC, CHIP 0.1uF 25V
C963	1-164-156-11	s	CERAMIC, CHIP 0.1uF 25V
C964	1-164-156-11	s	CERAMIC, CHIP 0.1uF 25V
CN3	1-770-452-21	o	CONNECTOR, BOARD TO BOARD 30P
CN4	1-774-391-11	o	CONNECTOR, BOARD TO BOARD 60P
CN5	1-580-267-11	o	CONNECTOR, BOARD TO BOARD 20P
CN6	1-793-091-91	o	CONNECTOR, BOARD TO BOARD 60P
CN7	1-785-551-21	o	CONNECTOR, BOARD TO BOARD 120P
CN9	1-785-849-11	o	CONNECTOR, BOARD TO BOARD 40P
D101	8-719-029-63	s	DIODE RD4.3uH-T1
D102	8-719-029-63	s	DIODE RD4.3uH-T1
D301	8-719-421-69	s	DIODE MA133
D302	8-719-421-69	s	DIODE MA133
D303	8-719-421-69	s	DIODE MA133
D304	8-719-421-69	s	DIODE MA133
D701	8-719-027-95	s	DIODE HSM88WK
D702	8-719-041-39	s	DIODE KV1470
D713	8-719-041-39	s	DIODE KV1470
D714	8-719-027-95	s	DIODE HSM88WK
D821	8-719-041-39	s	DIODE KV1470
FB301	1-414-445-11	s	FERRITE 0uH
FB302	1-414-445-11	s	FERRITE 0uH
FB303	1-414-445-11	s	FERRITE 0uH
FB304	1-414-445-11	s	FERRITE 0uH
FL301	1-233-742-11	s	FILTER, LOW PASS
FL302	1-233-740-11	s	FILTER, LOW PASS
FL303	1-233-742-11	s	FILTER, LOW PASS
FL304	1-233-740-11	s	FILTER, LOW PASS
FL305	1-233-742-11	s	FILTER, LOW PASS
FL306	1-233-740-11	s	FILTER, LOW PASS
FL307	1-233-740-11	s	FILTER, LOW PASS
FL501	1-233-345-21	s	FILTER, LOW PASS (5.5MHZ)
FL502	1-233-776-11	s	FILTER, LOW PASS
FL503	1-233-776-11	s	FILTER, LOW PASS
IC101	8-759-185-42	s	IC LM4040AIM3-2.5
IC102	8-759-669-72	s	IC TL064CPWR
IC103	8-759-669-45	s	IC TL062CPWR-12
IC104	8-759-659-94	s	IC SN74HC04APWR
IC105	8-759-523-95	s	IC TC74VHC74FT(EL)
IC106	8-752-376-32	s	IC CXD2310AR
IC107	8-752-376-32	s	IC CXD2310AR
IC108	8-752-376-32	s	IC CXD2310AR
IC201	8-759-049-87	s	IC SN74HCT244APWR
IC202	8-759-669-72	s	IC TL064CPWR
IC204	8-759-491-46	s	IC TC74VHCT04AFT(EL)
IC205	8-759-058-62	s	IC TC7SH08FU(TE85R)
IC206	8-759-196-93	s	IC TC7SH00FU-TE85R
IC208	8-759-196-96	s	IC TC7SH08FU-TE85R
IC209	8-759-447-77	s	IC TC7WH74FU(TE12R)
IC211	8-752-360-44	s	IC CXK1203AR-T4
IC212	8-752-360-44	s	IC CXK1203AR-T4
IC213	8-752-360-44	s	IC CXK1203AR-T4
IC214	8-752-360-44	s	IC CXK1203AR-T4
IC215	8-759-058-62	s	IC TC7SH08FU(TE85R)

(DPR-141 BOARD suffix 11)

Ref. No. or Q'ty	Part No.	SP	Description
IC217	8-759-491-46	s	IC TC74VHCT04AFT(EL)
IC218	8-759-049-87	s	IC SN74HCT244APWR
IC219	8-759-196-93	s	IC TC7SH00FU-TE85R
IC301	8-759-678-06	s	IC CAT24WC02JI-TE13
IC302	8-759-064-35	s	IC MB88346BPFV-EF
IC303	8-759-523-04	s	IC TC74HC4538AFT(EL)
IC304	8-759-058-58	s	IC TC7S04FU(TE85R)
IC305	8-759-485-79	s	IC TC7SET08FU(TE85R)
IC306	8-759-673-37	s	IC MM74HC00MTCX
IC307	8-752-363-60	s	IC CXD2307R-T6
IC308	8-759-523-02	s	IC TC74HC4053AFT(EL)
IC309	8-759-531-92	s	IC TC7WH04FU(TE12R)
IC310	8-752-381-65	o	IC CXD606-101R
IC311	8-759-485-79	s	IC TC7SET08FU(TE85R)
IC312	8-759-184-64	s	IC TC4W66FU
IC313	8-759-669-45	s	IC TL062CPWR-12
IC314	8-759-271-86	s	IC TC7SH04FU
IC315	8-759-491-46	s	IC TC74VHCT04AFT(EL)
IC316	8-759-523-95	s	IC TC74VHC74FT(EL)
IC317	8-759-485-79	s	IC TC7SET08FU(TE85R)
IC318	8-759-546-74	s	IC TC7WH157FU(TE12R)
IC319	8-752-334-64	s	IC CXD1171M
IC320	8-759-196-93	s	IC TC7SH00FU-TE85R
IC321	8-759-196-96	s	IC TC7SH08FU-TE85R
IC324	8-759-196-93	s	IC TC7SH00FU-TE85R
IC501	8-759-464-95	s	IC AK6420AF-E2
IC502	8-759-498-27	s	IC TK16074MTL
IC503	8-759-498-27	s	IC TK16074MTL
IC504	8-759-271-86	s	IC TC7SH04FU
IC505	8-759-457-61	s	IC CXD8628BR
IC506	8-759-485-79	s	IC TC7SET08FU(TE85R)
IC509	8-759-524-50	s	IC TC74VHC541FT(EL)
IC510	8-759-271-86	s	IC TC7SH04FU
IC511	8-759-386-27	s	IC 74LCX04MTCX
IC512	8-759-524-50	s	IC TC74VHC541FT(EL)
IC513	8-759-485-79	s	IC TC7SET08FU(TE85R)
IC514	8-752-363-60	s	IC CXD2307R-T6
IC517	8-759-524-04	s	IC TC74VHC125FT(EL)
IC518	8-759-524-04	s	IC TC74VHC125FT(EL)
IC521	8-759-196-96	s	IC TC7SH08FU-TE85R
IC601	8-759-327-31	s	IC CXD2183R
IC611	8-752-378-68	s	IC CXD3101R
IC621	8-759-328-28	s	IC ZA4024
IC631	8-759-328-28	s	IC ZA4024
IC651	8-759-426-26	s	IC CXD8608R
IC652	8-759-524-52	s	IC TC74VHC574FT(EL)
IC653	8-759-524-52	s	IC TC74VHC574FT(EL)
IC711	8-752-375-05	s	IC CXD2191R
IC751	8-752-864-20	s	IC CXP911016-015Q
IC752	8-759-464-95	s	IC AK6420AF-E2
IC771	8-759-385-90	s	IC CXD2187AR
IC772	8-759-585-05	s	IC CXD8627BR
IC773	8-759-082-60	s	IC TC7S66FU
IC781	8-759-433-17	s	IC UPD482445LG4-B10-9MH-E2-HDC
IC801	8-759-529-45	s	IC IDT71V256SA15PZ-TL
IC811	8-752-374-96	s	IC CXD2190R
IC821	8-759-271-86	s	IC TC7SH04FU
IC822	8-759-271-86	s	IC TC7SH04FU
IC823	8-759-362-16	s	IC CXD2913AQ
IC824	8-759-327-01	s	IC NJM062V(TE2)

(DPR-141 BOARD suffix 11)

Ref. No. or Q'ty	Part No.	SP	Description
IC825	8-759-429-28	s	IC CXD8630R
IC826	8-759-082-60	s	IC TC7S66FU
IC901	8-759-422-21	s	IC NJM4580V(TE2)
IC903	8-759-357-73	s	IC TL32088CNSR
IC904	8-759-357-74	s	IC TLC320AD58CDWR
IC905	8-759-173-51	s	IC SM5872AS-ET
IC906	8-759-422-21	s	IC NJM4580V(TE2)
IC907	8-759-422-21	s	IC NJM4580V(TE2)
IC908	8-759-422-21	s	IC NJM4580V(TE2)
IC909	8-759-184-64	s	IC TC4W66FU
IC910	8-759-184-64	s	IC TC4W66FU
IC911	8-752-374-97	s	IC CXD2705AR
IC912	8-759-051-49	s	IC SN74HCT541APWR
IC913	8-759-523-94	s	IC TC74VHC32FT(EL)
IC915	8-759-184-64	s	IC TC4W66FU
IC916	8-759-184-64	s	IC TC4W66FU
L101	1-412-951-11	s	INDUCTOR 10uH
L102	1-412-951-11	s	INDUCTOR 10uH
L103	1-412-951-11	s	INDUCTOR 10uH
L104	1-412-951-11	s	INDUCTOR 10uH
L105	1-412-951-11	s	INDUCTOR 10uH
L106	1-412-951-11	s	INDUCTOR 10uH
L107	1-412-951-11	s	INDUCTOR 10uH
L201	1-424-643-11	s	INDUCTOR 0uH
L301	1-412-955-11	s	INDUCTOR 22uH
L302	1-412-955-11	s	INDUCTOR 22uH
L303	1-410-371-41	s	INDUCTOR, CHIP 1.5uH
L305	1-410-385-11	s	INDUCTOR, CHIP 22uH
L306	1-424-643-11	s	INDUCTOR 0uH
L307	1-412-955-11	s	INDUCTOR 22uH
L308	1-412-955-11	s	INDUCTOR 22uH
L309	1-412-955-11	s	INDUCTOR 22uH
L310	1-412-955-11	s	INDUCTOR 22uH
L501	1-414-398-11	s	INDUCTOR 10uH
L502	1-414-398-11	s	INDUCTOR 10uH
L503	1-414-398-11	s	INDUCTOR 10uH
L601	1-410-381-11	s	INDUCTOR, CHIP 10uH
L611	1-414-398-11	s	INDUCTOR 10uH
L651	1-414-398-11	s	INDUCTOR 10uH
L701	1-410-378-11	s	INDUCTOR, CHIP 5.6uH
L711	1-414-402-11	s	INDUCTOR 47uH
L713	1-410-740-31	s	INDUCTOR CHIP 0.82uH
L751	1-414-398-11	s	INDUCTOR 10uH
L771	1-414-398-11	s	INDUCTOR 10uH
L772	1-414-398-11	s	INDUCTOR 10uH
L781	1-414-398-11	s	INDUCTOR 10uH
L801	1-414-398-11	s	INDUCTOR 10uH
L811	1-414-398-11	s	INDUCTOR 10uH
L821	1-414-398-11	s	INDUCTOR 10uH
L823	1-414-398-11	s	INDUCTOR 10uH
L824	1-414-398-11	s	INDUCTOR 10uH
L826	1-414-398-11	s	INDUCTOR 10uH
L827	1-414-398-11	s	INDUCTOR 10uH
L901	1-414-398-11	s	INDUCTOR 10uH
L902	1-414-398-11	s	INDUCTOR 10uH
L903	1-414-398-11	s	INDUCTOR 10uH
L904	1-414-398-11	s	INDUCTOR 10uH
L905	1-410-393-11	s	INDUCTOR, CHIP 100uH
L906	1-410-393-11	s	INDUCTOR, CHIP 100uH

(DPR-141 BOARD suffix 11)

Ref. No. or Q'ty	Part No.	SP	Description
L907	1-414-398-11	s	INDUCTOR 10uH
L908	1-414-398-11	s	INDUCTOR 10uH
L909	1-414-398-11	s	INDUCTOR 10uH
L980	1-414-392-21	s	INDUCTOR 1uH
L981	1-414-392-21	s	INDUCTOR 1uH
L982	1-414-392-21	s	INDUCTOR 1uH
L983	1-414-392-21	s	INDUCTOR 1uH
L984	1-414-392-21	s	INDUCTOR 1uH
LV825	1-411-984-11	s	COIL, VARIABLE
M2	3-617-806-01	s	SHEET,RADIATION(A)
M2	3-617-807-01	s	SHEET,RADIATION(B)
M3	3-617-807-01	s	SHEET,RADIATION(B)
M4	3-319-570-01	o	SPACER (M)
Q101	8-729-101-07	s	TRANSISTOR 2SB798
Q102	8-729-101-07	s	TRANSISTOR 2SB798
Q103	8-729-101-07	s	TRANSISTOR 2SB798
Q104	8-729-807-51	s	TRANSISTOR 2SD1623-S
Q105	8-729-427-74	s	TRANSISTOR XP4601
Q106	8-729-427-74	s	TRANSISTOR XP4601
Q107	8-729-427-74	s	TRANSISTOR XP4601
Q108	8-729-427-74	s	TRANSISTOR XP4601
Q301	8-729-427-83	s	TRANSISTOR XP6501
Q302	8-729-143-13	s	TRANSISTOR 2SC4176-B34
Q303	8-729-026-32	s	TRANSISTOR XP6534
Q304	8-729-026-31	s	TRANSISTOR XP6435
Q305	8-729-427-83	s	TRANSISTOR XP6501
Q306	8-729-143-13	s	TRANSISTOR 2SC4176-B34
Q307	8-729-026-32	s	TRANSISTOR XP6534
Q308	8-729-026-31	s	TRANSISTOR XP6435
Q309	8-729-427-83	s	TRANSISTOR XP6501
Q310	8-729-143-13	s	TRANSISTOR 2SC4176-B34
Q311	8-729-026-32	s	TRANSISTOR XP6534
Q312	8-729-026-31	s	TRANSISTOR XP6435
Q313	8-729-026-53	s	TRANSISTOR 2SA1576A-T106-QR
Q501	8-729-905-35	s	TRANSISTOR 2SC4081-R
Q502	8-729-905-35	s	TRANSISTOR 2SC4081-R
Q503	8-729-905-35	s	TRANSISTOR 2SC4081-R
Q504	8-729-905-35	s	TRANSISTOR 2SC4081-R
Q505	8-729-905-35	s	TRANSISTOR 2SC4081-R
Q506	8-729-026-53	s	TRANSISTOR 2SA1576A-T106-QR
Q507	8-729-055-85	s	TRANSISTOR UMT1N-TN
Q508	8-729-055-85	s	TRANSISTOR UMT1N-TN
Q823	8-729-029-14	s	TRANSISTOR DTC144EUA-T106
Q901	8-729-015-88	s	TRANSISTOR UMC3TL
Q902	8-729-013-37	s	TRANSISTOR 2SC4213-AB-TE85L
Q903	8-729-013-37	s	TRANSISTOR 2SC4213-AB-TE85L
Q904	8-729-013-37	s	TRANSISTOR 2SC4213-AB-TE85L
Q905	8-729-013-37	s	TRANSISTOR 2SC4213-AB-TE85L
Q906	8-729-015-88	s	TRANSISTOR UMC3TL
R101	1-218-881-11	s	METAL, CHIP 27K 0.50% 1/16W
R102	1-216-833-91	s	METAL, CHIP 10K 5% 1/16W
R103	1-218-881-11	s	METAL, CHIP 27K 0.50% 1/16W
R104	1-218-861-11	s	METAL, CHIP 3.9K 0.50% 1/16W
R105	1-218-879-11	s	METAL, CHIP 22K 0.50% 1/16W
R106	1-216-823-11	s	METAL, CHIP 1.5K 5% 1/16W
R107	1-218-863-11	s	METAL, CHIP 4.7K 0.50% 1/16W
R108	1-218-853-11	s	METAL, CHIP 1.8K 0.50% 1/16W
R109	1-218-883-11	s	METAL, CHIP 33K 0.50% 1/16W

(DPR-141 BOARD suffix 11)

Ref. No. or Q'ty	Part No.	SP	Description
R110	1-216-823-11	s	METAL, CHIP 1.5K 5% 1/16W
R111	1-218-881-11	s	METAL, CHIP 27K 0.50% 1/16W
R112	1-218-863-11	s	METAL, CHIP 4.7K 0.50% 1/16W
R113	1-218-883-11	s	METAL, CHIP 33K 0.50% 1/16W
R114	1-218-885-11	s	METAL, CHIP 39K 0.50% 1/16W
R115	1-218-884-11	s	METAL, CHIP 36K 0.50% 1/16W
R116	1-218-875-11	s	METAL, CHIP 15K 0.50% 1/16W
R117	1-218-883-11	s	METAL, CHIP 33K 0.50% 1/16W
R118	1-218-883-11	s	METAL, CHIP 33K 0.50% 1/16W
R119	1-216-821-11	s	METAL, CHIP 1K 5% 1/16W
R120	1-216-821-11	s	METAL, CHIP 1K 5% 1/16W
R121	1-216-845-11	s	METAL, CHIP 100K 5% 1/16W
R122	1-216-864-11	s	METAL, CHIP 0 5% 1/16W
R123	1-216-857-11	s	METAL, CHIP 1M 5% 1/16W
R124	1-216-857-11	s	METAL, CHIP 1M 5% 1/16W
R125	1-216-809-11	s	METAL, CHIP 100 5% 1/16W
R126	1-216-809-11	s	METAL, CHIP 100 5% 1/16W
R128	1-216-864-11	s	METAL, CHIP 0 5% 1/16W
R130	1-216-864-11	s	METAL, CHIP 0 5% 1/16W
R131	1-216-864-11	s	METAL, CHIP 0 5% 1/16W
R133	1-216-797-11	s	METAL, CHIP 10 5% 1/16W
R134	1-216-805-11	s	METAL, CHIP 47 5% 1/16W
R136	1-216-864-11	s	METAL, CHIP 0 5% 1/16W
R137	1-216-827-11	s	METAL, CHIP 3.3K 5% 1/16W
R138	1-218-835-11	s	METAL, CHIP 330 0.50% 1/16W
R139	1-216-827-11	s	METAL, CHIP 3.3K 5% 1/16W
R140	1-216-801-11	s	METAL, CHIP 22 5% 1/16W
R141	1-216-813-11	s	METAL, CHIP 220 5% 1/16W
R142	1-216-797-11	s	METAL, CHIP 10 5% 1/16W
R143	1-216-827-11	s	METAL, CHIP 3.3K 5% 1/16W
R144	1-218-835-11	s	METAL, CHIP 330 0.50% 1/16W
R145	1-216-827-11	s	METAL, CHIP 3.3K 5% 1/16W
R146	1-216-801-11	s	METAL, CHIP 22 5% 1/16W
R147	1-216-797-11	s	METAL, CHIP 10 5% 1/16W
R148	1-216-813-11	s	METAL, CHIP 220 5% 1/16W
R149	1-216-827-11	s	METAL, CHIP 3.3K 5% 1/16W
R150	1-218-835-11	s	METAL, CHIP 330 0.50% 1/16W
R151	1-216-827-11	s	METAL, CHIP 3.3K 5% 1/16W
R152	1-216-801-11	s	METAL, CHIP 22 5% 1/16W
R153	1-216-797-11	s	METAL, CHIP 10 5% 1/16W
R154	1-216-813-11	s	METAL, CHIP 220 5% 1/16W
R155	1-216-864-11	s	METAL, CHIP 0 5% 1/16W
R201	1-216-809-11	s	METAL, CHIP 100 5% 1/16W
R202	1-216-833-91	s	METAL, CHIP 10K 5% 1/16W
R203	*5 1-218-852-11	s	METAL, CHIP 1.6K 0.50% 1/16W
	*6 1-218-843-91	s	METAL, CHIP 680 0.50% 1/16W
R204	*9 1-216-821-11	s	METAL, CHIP 1K 5% 1/16W
	*8 1-216-864-11	s	METAL, CHIP 0 5% 1/16W
R206	1-216-809-11	s	METAL, CHIP 100 5% 1/16W
R207	*7 1-216-823-11	s	METAL, CHIP 1.5K 5% 1/16W
R208	*5 1-218-701-11	s	METAL, CHIP 2.4K 0.50% 1/16W
	*6 1-218-847-91	s	METAL, CHIP 1K 0.50% 1/16W
R209	1-216-864-11	s	METAL, CHIP 0 5% 1/16W
R210	1-218-871-11	s	METAL, CHIP 10K 0.50% 1/16W
R211	1-218-871-11	s	METAL, CHIP 10K 0.50% 1/16W
R212	1-218-871-11	s	METAL, CHIP 10K 0.50% 1/16W
R213	1-218-871-11	s	METAL, CHIP 10K 0.50% 1/16W
R214	1-218-871-11	s	METAL, CHIP 10K 0.50% 1/16W
R215	1-218-871-11	s	METAL, CHIP 10K 0.50% 1/16W
R216	1-218-867-11	s	METAL, CHIP 6.8K 0.50% 1/16W

(DPR-141 BOARD suffix 11)

Ref. No. or Q'ty	Part No.	SP	Description
R217	1-218-867-11	s	METAL, CHIP 6.8K 0.50% 1/16W
R218	1-218-867-11	s	METAL, CHIP 6.8K 0.50% 1/16W
R219	1-218-867-11	s	METAL, CHIP 6.8K 0.50% 1/16W
R220	1-218-867-11	s	METAL, CHIP 6.8K 0.50% 1/16W
R221	1-218-867-11	s	METAL, CHIP 6.8K 0.50% 1/16W
R223	1-216-797-11	s	METAL, CHIP 10 5% 1/16W
R224	1-216-864-11	s	METAL, CHIP 0 5% 1/16W
R225	1-218-883-11	s	METAL, CHIP 33K 0.50% 1/16W
R226	1-218-883-11	s	METAL, CHIP 33K 0.50% 1/16W
R227	1-218-883-11	s	METAL, CHIP 33K 0.50% 1/16W
R228	1-216-797-11	s	METAL, CHIP 10 5% 1/16W
R229	1-218-883-11	s	METAL, CHIP 33K 0.50% 1/16W
R230	1-218-883-11	s	METAL, CHIP 33K 0.50% 1/16W
R231	1-218-883-11	s	METAL, CHIP 33K 0.50% 1/16W
R233	1-216-805-11	s	METAL, CHIP 47 5% 1/16W
R234	1-216-809-11	s	METAL, CHIP 100 5% 1/16W
R235	1-216-864-11	s	METAL, CHIP 0 5% 1/16W
R237	1-216-825-11	s	METAL, CHIP 2.2K 5% 1/16W
R238	1-216-797-11	s	METAL, CHIP 10 5% 1/16W
R239	1-216-813-11	s	METAL, CHIP 220 5% 1/16W
R240	1-216-845-11	s	METAL, CHIP 100K 5% 1/16W
R241	1-216-845-11	s	METAL, CHIP 100K 5% 1/16W
R242	1-216-845-11	s	METAL, CHIP 100K 5% 1/16W
R243	1-216-816-11	s	METAL, CHIP 390 5% 1/16W
R244	1-218-847-11	s	METAL, CHIP 1K 0.50% 1/16W
R245	1-216-809-11	s	METAL, CHIP 100 5% 1/16W
R246	1-216-809-11	s	METAL, CHIP 100 5% 1/16W
R247	1-216-805-11	s	METAL, CHIP 47 5% 1/16W
R248	1-216-805-11	s	METAL, CHIP 47 5% 1/16W
R249	1-216-805-11	s	METAL, CHIP 47 5% 1/16W
R251	1-218-847-11	s	METAL, CHIP 1K 0.50% 1/16W
R252	1-216-833-91	s	METAL, CHIP 10K 5% 1/16W
R253	1-216-809-11	s	METAL, CHIP 100 5% 1/16W
R255	1-216-821-11	s	METAL, CHIP 1K 5% 1/16W
R256	*3 1-216-805-11	s	METAL, CHIP 47 5% 1/16W
	*4 1-216-829-11	s	METAL, CHIP 4.7K 5% 1/16W
	*8 1-216-830-11	s	METAL, CHIP 200 5% 1/16W
R301	1-216-827-11	s	METAL, CHIP 3.3K 5% 1/16W
R302	1-216-839-11	s	METAL, CHIP 33K 5% 1/16W
R303	1-218-879-11	s	METAL, CHIP 22K 0.50% 1/16W
R304	1-218-887-11	s	METAL, CHIP 47K 0.50% 1/16W
R305	1-218-885-11	s	METAL, CHIP 39K 0.50% 1/16W
R306	1-218-875-11	s	METAL, CHIP 15K 0.50% 1/16W
R308	1-218-887-11	s	METAL, CHIP 47K 0.50% 1/16W
R309	1-218-885-11	s	METAL, CHIP 39K 0.50% 1/16W
R310	1-218-875-11	s	METAL, CHIP 15K 0.50% 1/16W
R312	1-218-887-11	s	METAL, CHIP 47K 0.50% 1/16W
R313	1-218-885-11	s	METAL, CHIP 39K 0.50% 1/16W
R316	1-216-864-11	s	METAL, CHIP 0 5% 1/16W
R317	1-216-845-11	s	METAL, CHIP 100K 5% 1/16W
R318	1-216-845-11	s	METAL, CHIP 100K 5% 1/16W
R319	1-218-823-11	s	METAL, CHIP 100 0.50% 1/16W
R320	1-218-823-11	s	METAL, CHIP 100 0.50% 1/16W
R321	1-216-809-11	s	METAL, CHIP 100 5% 1/16W
R322	1-218-827-11	s	METAL, CHIP 150 0.50% 1/16W
R323	1-218-827-11	s	METAL, CHIP 150 0.50% 1/16W
R324	1-218-827-11	s	METAL, CHIP 150 0.50% 1/16W
R325	1-218-859-11	s	METAL, CHIP 3.3K 0.50% 1/16W
R326	1-218-859-11	s	METAL, CHIP 3.3K 0.50% 1/16W
R327	1-218-859-11	s	METAL, CHIP 3.3K 0.50% 1/16W

(DPR-141 BOARD suffix 11)

Ref. No. or Q'ty	Part No.	SP	Description
R328	1-211-977-11	s	METAL, CHIP 22 0.50% 1/16W
R329	1-216-825-11	s	METAL, CHIP 2.2K 5% 1/16W
R330	1-216-827-11	s	METAL, CHIP 3.3K 5% 1/16W
R331	1-216-821-11	s	METAL, CHIP 1K 5% 1/16W
R332	1-216-821-11	s	METAL, CHIP 1K 5% 1/16W
R333	1-211-977-11	s	METAL, CHIP 22 0.50% 1/16W
R334	1-211-977-11	s	METAL, CHIP 22 0.50% 1/16W
R335	1-218-863-11	s	METAL, CHIP 4.7K 0.50% 1/16W
R336	1-218-863-11	s	METAL, CHIP 4.7K 0.50% 1/16W
R337	1-218-847-11	s	METAL, CHIP 1K 0.50% 1/16W
R338	1-218-874-11	s	METAL, CHIP 13K 0.50% 1/16W
R339	1-218-839-11	s	METAL, CHIP 470 0.50% 1/16W
R342	1-218-863-11	s	METAL, CHIP 4.7K 0.50% 1/16W
R343	1-218-839-11	s	METAL, CHIP 470 0.50% 1/16W
R344	1-218-847-11	s	METAL, CHIP 1K 0.50% 1/16W
R345	1-216-801-11	s	METAL, CHIP 22 5% 1/16W
R346	1-218-863-11	s	METAL, CHIP 4.7K 0.50% 1/16W
R347	1-216-829-11	s	METAL, CHIP 4.7K 5% 1/16W
R348	1-216-801-11	s	METAL, CHIP 22 5% 1/16W
R349	1-216-857-11	s	METAL, CHIP 1M 5% 1/16W
R350	1-216-825-11	s	METAL, CHIP 2.2K 5% 1/16W
R351	1-216-827-11	s	METAL, CHIP 3.3K 5% 1/16W
R352	1-216-821-11	s	METAL, CHIP 1K 5% 1/16W
R353	1-216-821-11	s	METAL, CHIP 1K 5% 1/16W
R354	1-211-977-11	s	METAL, CHIP 22 0.50% 1/16W
R355	1-211-977-11	s	METAL, CHIP 22 0.50% 1/16W
R356	1-218-863-11	s	METAL, CHIP 4.7K 0.50% 1/16W
R357	1-218-863-11	s	METAL, CHIP 4.7K 0.50% 1/16W
R358	1-218-847-11	s	METAL, CHIP 1K 0.50% 1/16W
R359	1-218-874-11	s	METAL, CHIP 13K 0.50% 1/16W
R360	1-218-839-11	s	METAL, CHIP 470 0.50% 1/16W
R363	1-218-863-11	s	METAL, CHIP 4.7K 0.50% 1/16W
R364	1-218-839-11	s	METAL, CHIP 470 0.50% 1/16W
R365	1-218-847-11	s	METAL, CHIP 1K 0.50% 1/16W
R366	1-216-801-11	s	METAL, CHIP 22 5% 1/16W
R367	1-218-863-11	s	METAL, CHIP 4.7K 0.50% 1/16W
R368	1-216-829-11	s	METAL, CHIP 4.7K 5% 1/16W
R369	1-216-801-11	s	METAL, CHIP 22 5% 1/16W
R370	1-216-825-11	s	METAL, CHIP 2.2K 5% 1/16W
R371	1-216-827-11	s	METAL, CHIP 3.3K 5% 1/16W
R372	1-216-821-11	s	METAL, CHIP 1K 5% 1/16W
R373	1-216-821-11	s	METAL, CHIP 1K 5% 1/16W
R374	1-211-977-11	s	METAL, CHIP 22 0.50% 1/16W
R375	1-211-977-11	s	METAL, CHIP 22 0.50% 1/16W
R376	1-218-863-11	s	METAL, CHIP 4.7K 0.50% 1/16W
R377	1-218-863-11	s	METAL, CHIP 4.7K 0.50% 1/16W
R378	1-218-847-11	s	METAL, CHIP 1K 0.50% 1/16W
R379	1-218-874-11	s	METAL, CHIP 13K 0.50% 1/16W
R380	1-218-839-11	s	METAL, CHIP 470 0.50% 1/16W
R383	1-218-863-11	s	METAL, CHIP 4.7K 0.50% 1/16W
R384	1-218-839-11	s	METAL, CHIP 470 0.50% 1/16W
R385	1-218-847-11	s	METAL, CHIP 1K 0.50% 1/16W
R386	1-216-801-11	s	METAL, CHIP 22 5% 1/16W
R387	1-218-863-11	s	METAL, CHIP 4.7K 0.50% 1/16W
R388	1-216-829-11	s	METAL, CHIP 4.7K 5% 1/16W
R389	1-216-801-11	s	METAL, CHIP 22 5% 1/16W
R390 *5	1-218-852-11	s	METAL, CHIP 1.6K 0.50% 1/16W
*6	1-218-843-11	s	METAL, CHIP 680 0.50% 1/16W
R391	1-218-843-11	s	METAL, CHIP 680 0.50% 1/16W
R392	1-216-805-11	s	METAL, CHIP 47 5% 1/16W

(DPR-141 BOARD suffix 11)

Ref. No. or Q'ty	Part No.	SP	Description
R393	1-216-805-11	s	METAL, CHIP 47 5% 1/16W
R394	1-216-821-11	s	METAL, CHIP 1K 5% 1/16W
R395 *5	1-218-701-11	s	METAL, CHIP 2.4K 0.50% 1/16W
*6	1-218-847-11	s	METAL, CHIP 1K 0.50% 1/16W
R396	1-218-847-11	s	METAL, CHIP 1K 0.50% 1/16W
R397	1-218-823-11	s	METAL, CHIP 100 0.50% 1/16W
R398	1-216-809-11	s	METAL, CHIP 100 5% 1/16W
R399	1-216-809-11	s	METAL, CHIP 100 5% 1/16W
R400	1-216-864-11	s	METAL, CHIP 0 5% 1/16W
R401	1-216-821-11	s	METAL, CHIP 1K 5% 1/16W
R402	1-216-821-11	s	METAL, CHIP 1K 5% 1/16W
R403	1-216-839-11	s	METAL, CHIP 33K 5% 1/16W
R404	1-216-833-91	s	METAL, CHIP 10K 5% 1/16W
R405	1-216-833-91	s	METAL, CHIP 10K 5% 1/16W
R406	1-216-833-91	s	METAL, CHIP 10K 5% 1/16W
R407	1-216-821-11	s	METAL, CHIP 1K 5% 1/16W
R408	1-216-809-11	s	METAL, CHIP 100 5% 1/16W
R409	1-216-809-11	s	METAL, CHIP 100 5% 1/16W
R410	1-216-809-11	s	METAL, CHIP 100 5% 1/16W
R411	1-216-857-11	s	METAL, CHIP 1M 5% 1/16W
R412 *7	1-216-819-11	s	METAL, CHIP 680 5% 1/16W
*8	1-216-864-11	s	METAL, CHIP 0 5% 1/16W
R413	1-216-845-11	s	METAL, CHIP 100K 5% 1/16W
R414	1-216-845-11	s	METAL, CHIP 100K 5% 1/16W
R415	1-216-797-11	s	METAL, CHIP 10 5% 1/16W
R416 *7	1-216-821-11	s	METAL, CHIP 1K 5% 1/16W
R417	1-216-864-11	s	METAL, CHIP 0 5% 1/16W
R419	1-216-805-11	s	METAL, CHIP 47 5% 1/16W
R420	1-216-797-11	s	METAL, CHIP 10 5% 1/16W
R424	1-216-864-11	s	METAL, CHIP 0 5% 1/16W
R425	1-216-817-11	s	METAL, CHIP 470 5% 1/16W
R426	1-216-813-11	s	METAL, CHIP 220 5% 1/16W
R427	1-216-816-11	s	METAL, CHIP 390 5% 1/16W
R428	1-216-864-11	s	METAL, CHIP 0 5% 1/16W
R430	1-218-869-11	s	METAL, CHIP 8.2K 0.50% 1/16W
R431	1-218-879-11	s	METAL, CHIP 22K 0.50% 1/16W
R432	1-218-857-11	s	METAL, CHIP 2.7K 0.50% 1/16W
R433	1-218-873-11	s	METAL, CHIP 12K 0.50% 1/16W
R434	1-218-847-11	s	METAL, CHIP 1K 0.50% 1/16W
R435	1-218-847-11	s	METAL, CHIP 1K 0.50% 1/16W
R436	1-216-829-11	s	METAL, CHIP 4.7K 5% 1/16W
R437	1-216-805-11	s	METAL, CHIP 47 5% 1/16W
R438	1-216-864-11	s	METAL, CHIP 0 5% 1/16W
R439	1-216-864-11	s	METAL, CHIP 0 5% 1/16W
R441	1-216-864-11	s	METAL, CHIP 0 5% 1/16W
R444	1-216-809-11	s	METAL, CHIP 100 5% 1/16W
R501	1-216-809-11	s	METAL, CHIP 100 5% 1/16W
R502	1-216-817-11	s	METAL, CHIP 470 5% 1/16W
R503	1-216-809-11	s	METAL, CHIP 100 5% 1/16W
R504	1-216-817-11	s	METAL, CHIP 470 5% 1/16W
R505	1-216-817-11	s	METAL, CHIP 470 5% 1/16W
R506	1-216-864-11	s	METAL, CHIP 0 5% 1/16W
R507	1-216-817-11	s	METAL, CHIP 470 5% 1/16W
R508	1-216-817-11	s	METAL, CHIP 470 5% 1/16W
R509	1-216-809-11	s	METAL, CHIP 100 5% 1/16W
R510	1-216-809-11	s	METAL, CHIP 100 5% 1/16W
R511	1-216-809-11	s	METAL, CHIP 100 5% 1/16W
R512	1-216-829-11	s	METAL, CHIP 4.7K 5% 1/16W
R513	1-216-829-11	s	METAL, CHIP 4.7K 5% 1/16W
R514	1-216-829-11	s	METAL, CHIP 4.7K 5% 1/16W

(DPR-141 BOARD suffix 11)

Ref. No. or Q'ty	Part No.	SP	Description
R515	1-216-809-11	s	METAL, CHIP 100 5% 1/16W
R516	1-216-849-11	s	METAL, CHIP 220K 5% 1/16W
R517	1-216-845-11	s	METAL, CHIP 100K 5% 1/16W
R518	1-216-821-11	s	METAL, CHIP 1K 5% 1/16W
R519	1-216-823-11	s	METAL, CHIP 1.5K 5% 1/16W
R520	1-216-823-11	s	METAL, CHIP 1.5K 5% 1/16W
R521	1-216-823-11	s	METAL, CHIP 1.5K 5% 1/16W
R522	1-216-825-11	s	METAL, CHIP 2.2K 5% 1/16W
R523	1-216-825-11	s	METAL, CHIP 2.2K 5% 1/16W
R524	1-216-833-91	s	METAL, CHIP 10K 5% 1/16W
R525	1-216-833-91	s	METAL, CHIP 10K 5% 1/16W
R526	1-216-823-11	s	METAL, CHIP 1.5K 5% 1/16W
R527	1-216-823-11	s	METAL, CHIP 1.5K 5% 1/16W
R528	1-218-847-11	s	METAL, CHIP 1K 0.50% 1/16W
R529	1-218-847-11	s	METAL, CHIP 1K 0.50% 1/16W
R532	1-218-847-11	s	METAL, CHIP 1K 0.50% 1/16W
R533	1-218-847-11	s	METAL, CHIP 1K 0.50% 1/16W
R534	1-216-825-11	s	METAL, CHIP 2.2K 5% 1/16W
R535	1-216-825-11	s	METAL, CHIP 2.2K 5% 1/16W
R536	1-218-847-11	s	METAL, CHIP 1K 0.50% 1/16W
R537	1-218-830-11	s	METAL, CHIP 200 0.50% 1/16W
R538	1-218-830-11	s	METAL, CHIP 200 0.50% 1/16W
R539	1-218-830-11	s	METAL, CHIP 200 0.50% 1/16W
R540	1-218-859-11	s	METAL, CHIP 3.3K 0.50% 1/16W
R541	1-218-859-11	s	METAL, CHIP 3.3K 0.50% 1/16W
R542	1-218-859-11	s	METAL, CHIP 3.3K 0.50% 1/16W
R543	1-216-809-11	s	METAL, CHIP 100 5% 1/16W
R544	1-216-833-91	s	METAL, CHIP 10K 5% 1/16W
R545	1-216-833-91	s	METAL, CHIP 10K 5% 1/16W
R548	1-216-849-11	s	METAL, CHIP 220K 5% 1/16W
R550	1-216-864-11	s	METAL, CHIP 0 5% 1/16W
R551	1-216-845-11	s	METAL, CHIP 100K 5% 1/16W
R552	1-216-821-11	s	METAL, CHIP 1K 5% 1/16W
R553	1-216-825-11	s	METAL, CHIP 2.2K 5% 1/16W
R559	1-216-833-91	s	METAL, CHIP 10K 5% 1/16W
R560	1-218-847-11	s	METAL, CHIP 1K 0.50% 1/16W
R561	1-216-809-11	s	METAL, CHIP 100 5% 1/16W
R563	1-216-809-11	s	METAL, CHIP 100 5% 1/16W
R564	1-216-809-11	s	METAL, CHIP 100 5% 1/16W
R565	1-216-809-11	s	METAL, CHIP 100 5% 1/16W
R568	1-216-809-11	s	METAL, CHIP 100 5% 1/16W
R569	1-216-821-11	s	METAL, CHIP 1K 5% 1/16W
R571	1-216-817-11	s	METAL, CHIP 470 5% 1/16W
R572	1-216-830-11	s	METAL, CHIP 5.6K 5% 1/16W
R573	1-216-830-11	s	METAL, CHIP 5.6K 5% 1/16W
R575	1-216-864-11	s	METAL, CHIP 0 5% 1/16W
R602	1-216-821-11	s	METAL, CHIP 1K 5% 1/16W
R616	1-216-849-11	s	METAL, CHIP 220K 5% 1/16W
R617	1-216-864-11	s	METAL, CHIP 0 5% 1/16W
R651	1-216-821-11	s	METAL, CHIP 1K 5% 1/16W
R658	1-216-809-11	s	METAL, CHIP 100 5% 1/16W
R701	1-216-864-11	s	METAL, CHIP 0 5% 1/16W
R702	1-216-809-11	s	METAL, CHIP 100 5% 1/16W
R703	1-216-809-11	s	METAL, CHIP 100 5% 1/16W
R704	1-216-833-91	s	METAL, CHIP 10K 5% 1/16W
R705	1-216-833-91	s	METAL, CHIP 10K 5% 1/16W
R706	1-216-829-11	s	METAL, CHIP 4.7K 5% 1/16W
R707	1-216-815-11	s	METAL, CHIP 330 5% 1/16W
R708	1-216-805-11	s	METAL, CHIP 47 5% 1/16W
R709	1-216-809-11	s	METAL, CHIP 100 5% 1/16W

(DPR-141 BOARD suffix 11)

Ref. No. or Q'ty	Part No.	SP	Description
R711	1-216-849-11	s	METAL, CHIP 220K 5% 1/16W
R712	1-216-864-11	s	METAL, CHIP 0 5% 1/16W
R713	1-216-821-11	s	METAL, CHIP 1K 5% 1/16W
R715	1-216-805-11	s	METAL, CHIP 47 5% 1/16W
R720	1-216-809-11	s	METAL, CHIP 100 5% 1/16W
R723	1-216-805-11	s	METAL, CHIP 47 5% 1/16W
R724	1-216-805-11	s	METAL, CHIP 47 5% 1/16W
R725	1-216-817-11	s	METAL, CHIP 470 5% 1/16W
R726	1-216-809-11	s	METAL, CHIP 100 5% 1/16W
R727	1-216-821-11	s	METAL, CHIP 1K 5% 1/16W
R728	1-216-833-91	s	METAL, CHIP 10K 5% 1/16W
R729	1-216-829-11	s	METAL, CHIP 4.7K 5% 1/16W
R730	1-216-805-11	s	METAL, CHIP 47 5% 1/16W
R731	1-216-833-91	s	METAL, CHIP 10K 5% 1/16W
R732	1-216-845-11	s	METAL, CHIP 100K 5% 1/16W
R733	1-216-845-11	s	METAL, CHIP 100K 5% 1/16W
R734	1-216-849-11	s	METAL, CHIP 220K 5% 1/16W
R751	1-216-809-11	s	METAL, CHIP 100 5% 1/16W
R752	1-216-845-11	s	METAL, CHIP 100K 5% 1/16W
R753	1-216-849-11	s	METAL, CHIP 220K 5% 1/16W
R754	1-216-821-11	s	METAL, CHIP 1K 5% 1/16W
R755	1-216-857-11	s	METAL, CHIP 1M 5% 1/16W
R758	1-216-833-91	s	METAL, CHIP 10K 5% 1/16W
R759	1-216-821-11	s	METAL, CHIP 1K 5% 1/16W
R760	1-216-849-11	s	METAL, CHIP 220K 5% 1/16W
R761	1-216-809-11	s	METAL, CHIP 100 5% 1/16W
R763	1-216-809-11	s	METAL, CHIP 100 5% 1/16W
R764	1-216-821-11	s	METAL, CHIP 1K 5% 1/16W
R765	1-216-821-11	s	METAL, CHIP 1K 5% 1/16W
R766	1-216-849-11	s	METAL, CHIP 220K 5% 1/16W
R767	1-216-821-11	s	METAL, CHIP 1K 5% 1/16W
R771	1-216-809-11	s	METAL, CHIP 100 5% 1/16W
R772	1-216-809-11	s	METAL, CHIP 100 5% 1/16W
R776	1-216-849-11	s	METAL, CHIP 220K 5% 1/16W
R777	1-216-849-11	s	METAL, CHIP 220K 5% 1/16W
R778	1-216-849-11	s	METAL, CHIP 220K 5% 1/16W
R779	1-216-821-11	s	METAL, CHIP 1K 5% 1/16W
R801	1-216-841-11	s	METAL, CHIP 47K 5% 1/16W
R802	1-216-821-11	s	METAL, CHIP 1K 5% 1/16W
R803	1-216-841-11	s	METAL, CHIP 47K 5% 1/16W
R804	1-216-821-11	s	METAL, CHIP 1K 5% 1/16W
R805	1-216-864-11	s	METAL, CHIP 0 5% 1/16W
R806	1-216-821-11	s	METAL, CHIP 1K 5% 1/16W
R807	1-216-864-11	s	METAL, CHIP 0 5% 1/16W
R808	1-216-821-11	s	METAL, CHIP 1K 5% 1/16W
R809	1-216-864-11	s	METAL, CHIP 0 5% 1/16W
R811	1-216-864-11	s	METAL, CHIP 0 5% 1/16W
R812	1-216-845-11	s	METAL, CHIP 100K 5% 1/16W
R813	1-216-841-11	s	METAL, CHIP 47K 5% 1/16W
R814	1-216-821-11	s	METAL, CHIP 1K 5% 1/16W
R815	1-216-849-11	s	METAL, CHIP 220K 5% 1/16W
R816	1-216-849-11	s	METAL, CHIP 220K 5% 1/16W
R817	1-216-841-11	s	METAL, CHIP 47K 5% 1/16W
R818	1-216-841-11	s	METAL, CHIP 47K 5% 1/16W
R819	1-216-841-11	s	METAL, CHIP 47K 5% 1/16W
R820	1-216-821-11	s	METAL, CHIP 1K 5% 1/16W
R821	1-218-887-11	s	METAL, CHIP 47K 0.50% 1/16W
R822	1-218-887-11	s	METAL, CHIP 47K 0.50% 1/16W
R823	1-216-841-11	s	METAL, CHIP 47K 5% 1/16W
R824	1-216-841-11	s	METAL, CHIP 47K 5% 1/16W

(DPR-141 BOARD suffix 11)

Ref. No. or Q'ty	Part No.	SP	Description
R825	1-218-879-11	s	METAL, CHIP 22K 0.50% 1/16W
R826	1-216-821-11	s	METAL, CHIP 1K 5% 1/16W
R827	1-218-883-11	s	METAL, CHIP 33K 0.50% 1/16W
R828	1-216-841-11	s	METAL, CHIP 47K 5% 1/16W
R829	1-216-849-11	s	METAL, CHIP 220K 5% 1/16W
R830	1-216-821-11	s	METAL, CHIP 1K 5% 1/16W
R901	1-218-871-11	s	METAL, CHIP 10K 0.50% 1/16W
R902	1-218-871-11	s	METAL, CHIP 10K 0.50% 1/16W
R904	1-216-821-11	s	METAL, CHIP 1K 5% 1/16W
R906	1-216-821-11	s	METAL, CHIP 1K 5% 1/16W
R907	1-218-871-11	s	METAL, CHIP 10K 0.50% 1/16W
R908	1-218-879-11	s	METAL, CHIP 22K 0.50% 1/16W
R909	1-216-805-11	s	METAL, CHIP 47 5% 1/16W
R910	1-216-805-11	s	METAL, CHIP 47 5% 1/16W
R911	1-218-872-11	s	METAL, CHIP 11K 0.50% 1/16W
R912	1-218-871-11	s	METAL, CHIP 10K 0.50% 1/16W
R913	1-216-849-11	s	METAL, CHIP 220K 5% 1/16W
R914	1-216-821-11	s	METAL, CHIP 1K 5% 1/16W
R915	1-216-841-11	s	METAL, CHIP 47K 5% 1/16W
R916	1-218-871-11	s	METAL, CHIP 10K 0.50% 1/16W
R917	1-218-871-11	s	METAL, CHIP 10K 0.50% 1/16W
R918	1-218-871-11	s	METAL, CHIP 10K 0.50% 1/16W
R919	1-218-871-11	s	METAL, CHIP 10K 0.50% 1/16W
R920	1-218-871-11	s	METAL, CHIP 10K 0.50% 1/16W
R921	1-218-871-11	s	METAL, CHIP 10K 0.50% 1/16W
R922	1-218-871-11	s	METAL, CHIP 10K 0.50% 1/16W
R923	1-218-871-11	s	METAL, CHIP 10K 0.50% 1/16W
R924	1-218-880-11	s	METAL, CHIP 24K 0.50% 1/16W
R925	1-218-880-11	s	METAL, CHIP 24K 0.50% 1/16W
R926	1-218-880-11	s	METAL, CHIP 24K 0.50% 1/16W
R927	1-218-880-11	s	METAL, CHIP 24K 0.50% 1/16W
R928	1-218-857-11	s	METAL, CHIP 2.7K 0.50% 1/16W
R929	1-218-857-11	s	METAL, CHIP 2.7K 0.50% 1/16W
R930	1-218-857-11	s	METAL, CHIP 2.7K 0.50% 1/16W
R931	1-218-857-11	s	METAL, CHIP 2.7K 0.50% 1/16W
R932	1-218-857-11	s	METAL, CHIP 2.7K 0.50% 1/16W
R933	1-218-857-11	s	METAL, CHIP 2.7K 0.50% 1/16W
R934	1-218-860-11	s	METAL, CHIP 3.6K 0.50% 1/16W
R935	1-218-860-11	s	METAL, CHIP 3.6K 0.50% 1/16W
R936	1-218-859-11	s	METAL, CHIP 3.3K 0.50% 1/16W
R937	1-218-859-11	s	METAL, CHIP 3.3K 0.50% 1/16W
R939	1-218-871-11	s	METAL, CHIP 10K 0.50% 1/16W
R940	1-218-871-11	s	METAL, CHIP 10K 0.50% 1/16W
R941	1-218-871-11	s	METAL, CHIP 10K 0.50% 1/16W
R942	1-216-809-11	s	METAL, CHIP 100 5% 1/16W
R943	1-216-809-11	s	METAL, CHIP 100 5% 1/16W
R944	1-216-845-11	s	METAL, CHIP 100K 5% 1/16W
R945	1-216-845-11	s	METAL, CHIP 100K 5% 1/16W
R946	1-216-849-11	s	METAL, CHIP 220K 5% 1/16W
R947	1-216-821-11	s	METAL, CHIP 1K 5% 1/16W
R948	1-216-805-11	s	METAL, CHIP 47 5% 1/16W
R949	1-216-864-11	s	METAL, CHIP 0 5% 1/16W
R952	1-216-864-11	s	METAL, CHIP 0 5% 1/16W
R953	1-218-872-11	s	METAL, CHIP 11K 0.50% 1/16W
R954	1-218-879-11	s	METAL, CHIP 22K 0.50% 1/16W
R955	1-218-872-11	s	METAL, CHIP 11K 0.50% 1/16W
R957	1-218-872-11	s	METAL, CHIP 11K 0.50% 1/16W
R958	1-218-871-11	s	METAL, CHIP 10K 0.50% 1/16W
R959	1-218-878-11	s	METAL, CHIP 20K 0.50% 1/16W
R960	1-216-841-11	s	METAL, CHIP 47K 5% 1/16W

(DPR-141 BOARD suffix 11)

Ref. No. or Q'ty	Part No.	SP	Description
R962	1-216-841-11	s	METAL, CHIP 47K 5% 1/16W
R963	1-218-871-11	s	METAL, CHIP 10K 0.50% 1/16W
R964	1-218-878-11	s	METAL, CHIP 20K 0.50% 1/16W
R965	1-216-841-11	s	METAL, CHIP 47K 5% 1/16W
R967	1-218-871-11	s	METAL, CHIP 10K 0.50% 1/16W
R968	1-216-841-11	s	METAL, CHIP 47K 5% 1/16W
R969	1-218-829-11	s	METAL, CHIP 180 0.50% 1/16W
R970	1-216-841-11	s	METAL, CHIP 47K 5% 1/16W
R971	1-216-809-11	s	METAL, CHIP 100 5% 1/16W
R972	1-218-872-11	s	METAL, CHIP 11K 0.50% 1/16W
R974	1-218-829-11	s	METAL, CHIP 180 0.50% 1/16W
R975	1-218-872-11	s	METAL, CHIP 11K 0.50% 1/16W
RB101	1-239-409-11	s	RESISTOR BLOCK, CHIP 47X4
RB102	1-239-409-11	s	RESISTOR BLOCK, CHIP 47X4
RB103	1-239-409-11	s	RESISTOR BLOCK, CHIP 47X4
RB104	1-239-409-11	s	RESISTOR BLOCK, CHIP 47X4
RB105	1-239-409-11	s	RESISTOR BLOCK, CHIP 47X4
RB106	1-239-409-11	s	RESISTOR BLOCK, CHIP 47X4
RB107	1-239-409-11	s	RESISTOR BLOCK, CHIP 47X4
RB108	1-239-409-11	s	RESISTOR BLOCK, CHIP 47X4
RB109	1-239-409-11	s	RESISTOR BLOCK, CHIP 47X4
RB201	1-239-409-11	s	RESISTOR BLOCK, CHIP 47X4
RB202	1-236-904-11	s	RESISTOR BLOCK, CHIP 1KX4
RB203	1-236-904-11	s	RESISTOR BLOCK, CHIP 1KX4
RB204	1-236-908-11	s	RESISTOR, NETWORK, CHIP 10k
RB205	1-236-908-11	s	RESISTOR, NETWORK, CHIP 10k
RB206	1-236-908-11	s	RESISTOR, NETWORK, CHIP 10k
RB207	1-236-908-11	s	RESISTOR, NETWORK, CHIP 10k
RB208	1-236-908-11	s	RESISTOR, NETWORK, CHIP 10k
RB209	1-236-907-11	s	RESISTOR BLOCK, CHIP 100KX4
RB210	1-236-908-11	s	RESISTOR, NETWORK, CHIP 10k
RB211	1-236-908-11	s	RESISTOR, NETWORK, CHIP 10k
RB212	1-236-907-11	s	RESISTOR BLOCK, CHIP 100KX4
RB213	1-236-908-11	s	RESISTOR, NETWORK, CHIP 10k
RB214	1-239-409-11	s	RESISTOR BLOCK, CHIP 47X4
RB215	1-239-409-11	s	RESISTOR BLOCK, CHIP 47X4
RB216	1-239-409-11	s	RESISTOR BLOCK, CHIP 47X4
RB217	1-239-409-11	s	RESISTOR BLOCK, CHIP 47X4
RB218	1-239-409-11	s	RESISTOR BLOCK, CHIP 47X4
RB219	1-239-409-11	s	RESISTOR BLOCK, CHIP 47X4
RB220	1-239-409-11	s	RESISTOR BLOCK, CHIP 47X4
RB221	1-236-908-11	s	RESISTOR, NETWORK, CHIP 10k
RB222	1-236-908-11	s	RESISTOR, NETWORK, CHIP 10k
RB223	1-239-409-11	s	RESISTOR BLOCK, CHIP 47X4
RB224	1-236-907-11	s	RESISTOR BLOCK, CHIP 100KX4
RB225	1-236-907-11	s	RESISTOR BLOCK, CHIP 100KX4
RB226	1-236-907-11	s	RESISTOR BLOCK, CHIP 100KX4
RB227	1-236-907-11	s	RESISTOR BLOCK, CHIP 100KX4
RB228	1-236-907-11	s	RESISTOR BLOCK, CHIP 100KX4
RB229	1-236-907-11	s	RESISTOR BLOCK, CHIP 100KX4
RB230	1-236-907-11	s	RESISTOR BLOCK, CHIP 100KX4
RB231	1-236-907-11	s	RESISTOR BLOCK, CHIP 100KX4
RB301	1-236-904-11	s	RESISTOR BLOCK, CHIP 1KX4
RB302	1-236-907-11	s	RESISTOR BLOCK, CHIP 100KX4
RB303	1-239-309-11	s	RESISTOR BLOCK, CHIP 100KX8
RB304	1-239-419-11	s	NETWORK RESISTOR (CHIP) 470
RB305	1-239-419-11	s	NETWORK RESISTOR (CHIP) 470
RB306	1-239-711-91	s	NETWORK RESISTOR (CHIP) 0
RB307	1-239-711-91	s	NETWORK RESISTOR (CHIP) 0

(DPR-141 BOARD suffix 11)

Ref. No. or Q'ty	Part No.	SP	Description
RB501	1-236-904-11	s	RESISTOR BLOCK, CHIP 1KX4
RB503	1-239-444-11	s	RESUSTIR BLOCK, CHIP 220K
RB504	1-239-444-11	s	RESUSTIR BLOCK, CHIP 220K
RB505	1-239-412-11	s	NETWORK RESISTOR (CHIP) 100
RB506	1-239-412-11	s	NETWORK RESISTOR (CHIP) 100
RB507	1-239-412-11	s	NETWORK RESISTOR (CHIP) 100
RB508	1-239-412-11	s	NETWORK RESISTOR (CHIP) 100
RB509	1-239-444-11	s	RESUSTIR BLOCK, CHIP 220K
RB510	1-239-412-11	s	NETWORK RESISTOR (CHIP) 100
RB511	1-239-412-11	s	NETWORK RESISTOR (CHIP) 100
RB512	1-239-412-11	s	NETWORK RESISTOR (CHIP) 100
RB513	1-239-412-11	s	NETWORK RESISTOR (CHIP) 100
RB514	1-239-412-11	s	NETWORK RESISTOR (CHIP) 100
RB515	1-239-412-11	s	NETWORK RESISTOR (CHIP) 100
RB516	1-239-409-11	s	RESISTOR BLOCK, CHIP 47X4
RB517	1-239-409-11	s	RESISTOR BLOCK, CHIP 47X4
RB518	1-239-409-11	s	RESISTOR BLOCK, CHIP 47X4
RB519	1-239-409-11	s	RESISTOR BLOCK, CHIP 47X4
RB520	1-239-409-11	s	RESISTOR BLOCK, CHIP 47X4
RB521	1-239-409-11	s	RESISTOR BLOCK, CHIP 47X4
RB522	1-239-409-11	s	RESISTOR BLOCK, CHIP 47X4
RB611	1-236-904-11	s	RESISTOR BLOCK, CHIP 1KX4
RB711	1-236-904-11	s	RESISTOR BLOCK, CHIP 1KX4
RB712	1-236-904-11	s	RESISTOR BLOCK, CHIP 1KX4
RB713	1-239-444-11	s	RESUSTIR BLOCK, CHIP 220K
RB753	1-239-444-11	s	RESUSTIR BLOCK, CHIP 220K
RB755	1-239-412-11	s	NETWORK RESISTOR (CHIP) 100
RB756	1-239-444-11	s	RESUSTIR BLOCK, CHIP 220K
RB771	1-236-904-11	s	RESISTOR BLOCK, CHIP 1KX4
RB772	1-236-904-11	s	RESISTOR BLOCK, CHIP 1KX4
RB774	1-236-904-11	s	RESISTOR BLOCK, CHIP 1KX4
RB775	1-236-904-11	s	RESISTOR BLOCK, CHIP 1KX4
RB802	1-236-904-11	s	RESISTOR BLOCK, CHIP 1KX4
X401	1-767-695-21	s	OSCILLATOR, CRYSTAL
X711	1-760-654-21	s	VIBRATOR, CRYSTAL
X751	1-760-655-21	s	VIBRATOR, CRYSTAL

DPR-141B BOARD

Ref. No. or Q'ty	Part No.	SP	Description
1pc	A-8344-128-A	s	MOUNTED CIRCUIT BOARD, DPR-141B
5pcs	3-729-013-41	s	SCREW(M1.4X3.5),WASHERHEAD(+P)
4pcs	7-622-205-05	s	NUT M2 TYPE2
4pcs	7-628-253-20	s	SCREW +PS 2X6
C101	1-164-156-11	s	CAPACITOR,CERAMIC 0.1MF/25V F
C102	1-164-156-11	s	CAPACITOR,CERAMIC 0.1MF/25V F
C103	1-164-156-11	s	CAPACITOR,CERAMIC 0.1MF/25V F
C104	1-164-156-11	s	CAPACITOR,CERAMIC 0.1MF/25V F
C105	1-164-156-11	s	CAPACITOR,CERAMIC 0.1MF/25V F
C106	1-104-912-11	s	CAPACITOR TANTALUM 3.3MF/16V
C107	1-107-689-21	s	CAPACITOR,TANTALUM 1MF/35V
C108	1-137-689-11	s	CAP, CHIP TANTALUM ELECT 47MF
C109	1-164-156-11	s	CAPACITOR,CERAMIC 0.1MF/25V F
C110	1-104-912-11	s	CAPACITOR TANTALUM 3.3MF/16V
C111	1-113-682-11	s	CAPACITOR,TANTALUM 33MF/10V
C112	1-164-156-11	s	CAPACITOR,CERAMIC 0.1MF/25V F
C113	1-164-156-11	s	CAPACITOR,CERAMIC 0.1MF/25V F
C114	1-164-156-11	s	CAPACITOR,CERAMIC 0.1MF/25V F
C115	1-164-156-11	s	CAPACITOR,CERAMIC 0.1MF/25V F
C116	1-104-912-11	s	CAPACITOR TANTALUM 3.3MF/16V
C117	1-104-912-11	s	CAPACITOR TANTALUM 3.3MF/16V
C118	1-113-682-11	s	CAPACITOR,TANTALUM 33MF/10V
C119	1-113-682-11	s	CAPACITOR,TANTALUM 33MF/10V
C120	1-135-177-21	s	CAPACITOR TANTALUM 1MF/25V
C121	1-135-177-21	s	CAPACITOR TANTALUM 1MF/25V
C122	1-164-156-11	s	CAPACITOR,CERAMIC 0.1MF/25V F
C123	1-135-957-11	s	CAP, CHIP TANTALUM ELECT 10MF
C124	1-164-156-11	s	CAPACITOR,CERAMIC 0.1MF/25V F
C125	1-164-156-11	s	CAPACITOR,CERAMIC 0.1MF/25V F
C131	1-164-156-11	s	CAPACITOR,CERAMIC 0.1MF/25V F
C133	1-164-156-11	s	CAPACITOR,CERAMIC 0.1MF/25V F
C134	1-162-921-11	s	CAPACITOR,CERAMIC 33PF/50V CH
C135	1-113-682-11	s	CAPACITOR,TANTALUM 33MF/10V
C136	1-164-156-11	s	CAPACITOR,CERAMIC 0.1MF/25V F
C137	1-107-686-11	s	CAPACITOR,TANTALUM 4.7MF/16V
C138	1-164-156-11	s	CAPACITOR,CERAMIC 0.1MF/25V F
C139	1-107-686-11	s	CAPACITOR,TANTALUM 4.7MF/16V
C140	1-164-156-11	s	CAPACITOR,CERAMIC 0.1MF/25V F
C141	1-164-156-11	s	CAPACITOR,CERAMIC 0.1MF/25V F
C142	1-164-156-11	s	CAPACITOR,CERAMIC 0.1MF/25V F
C143	1-164-156-11	s	CAPACITOR,CERAMIC 0.1MF/25V F
C144	1-164-156-11	s	CAPACITOR,CERAMIC 0.1MF/25V F
C145	1-110-569-21	s	CAPACITOR CHIP TANTAL47MF/6.3V
C146	1-162-921-11	s	CAPACITOR,CERAMIC 33PF/50V CH
C147	1-113-682-11	s	CAPACITOR,TANTALUM 33MF/10V
C148	1-164-156-11	s	CAPACITOR,CERAMIC 0.1MF/25V F
C149	1-107-686-11	s	CAPACITOR,TANTALUM 4.7MF/16V
C150	1-164-156-11	s	CAPACITOR,CERAMIC 0.1MF/25V F
C151	1-107-686-11	s	CAPACITOR,TANTALUM 4.7MF/16V
C152	1-164-156-11	s	CAPACITOR,CERAMIC 0.1MF/25V F
C153	1-164-156-11	s	CAPACITOR,CERAMIC 0.1MF/25V F
C154	1-164-156-11	s	CAPACITOR,CERAMIC 0.1MF/25V F
C155	1-164-156-11	s	CAPACITOR,CERAMIC 0.1MF/25V F
C156	1-164-156-11	s	CAPACITOR,CERAMIC 0.1MF/25V F
C157	1-110-569-21	s	CAPACITOR CHIP TANTAL47MF/6.3V
C158	1-162-921-11	s	CAPACITOR,CERAMIC 33PF/50V CH
C159	1-113-682-11	s	CAPACITOR,TANTALUM 33MF/10V
C160	1-164-156-11	s	CAPACITOR,CERAMIC 0.1MF/25V F
C161	1-107-686-11	s	CAPACITOR,TANTALUM 4.7MF/16V

(DPR-141B BOARD)

Ref. No. or Q'ty	Part No.	SP	Description
C162	1-164-156-11	s	CAPACITOR,CERAMIC 0.1MF/25V F
C163	1-107-686-11	s	CAPACITOR,TANTALUM 4.7MF/16V
C164	1-164-156-11	s	CAPACITOR,CERAMIC 0.1MF/25V F
C165	1-164-156-11	s	CAPACITOR,CERAMIC 0.1MF/25V F
C166	1-164-156-11	s	CAPACITOR,CERAMIC 0.1MF/25V F
C167	1-164-156-11	s	CAPACITOR,CERAMIC 0.1MF/25V F
C168	1-164-156-11	s	CAPACITOR,CERAMIC 0.1MF/25V F
C169	1-110-569-21	s	CAPACITOR CHIP TANTAL47MF/6.3V
C201	1-164-156-11	s	CAPACITOR,CERAMIC 0.1MF/25V F
C202	1-110-569-21	s	CAPACITOR CHIP TANTAL47MF/6.3V
C203	1-162-920-11	s	CAPACITOR,CERAMIC 27PF/50V CH
C204	1-164-156-11	s	CAPACITOR,CERAMIC 0.1MF/25V F
C209	1-113-682-11	s	CAPACITOR,TANTALUM 33MF/10V
C210	1-113-682-11	s	CAPACITOR,TANTALUM 33MF/10V
C211	1-164-156-11	s	CAPACITOR,CERAMIC 0.1MF/25V F
C212	1-164-156-11	s	CAPACITOR,CERAMIC 0.1MF/25V F
C213	1-164-156-11	s	CAPACITOR,CERAMIC 0.1MF/25V F
C214	1-164-156-11	s	CAPACITOR,CERAMIC 0.1MF/25V F
C215	1-164-156-11	s	CAPACITOR,CERAMIC 0.1MF/25V F
C216	1-164-156-11	s	CAPACITOR,CERAMIC 0.1MF/25V F
C220	1-164-156-11	s	CAPACITOR,CERAMIC 0.1MF/25V F
C221	1-113-682-11	s	CAPACITOR,TANTALUM 33MF/10V
C222	1-113-682-11	s	CAPACITOR,TANTALUM 33MF/10V
C223	1-113-682-11	s	CAPACITOR,TANTALUM 33MF/10V
C224	1-104-851-11	s	CAPACITOR,TANTALUM 10MF/10V
C225	1-104-851-11	s	CAPACITOR,TANTALUM 10MF/10V
C226	1-104-851-11	s	CAPACITOR,TANTALUM 10MF/10V
C231	1-164-156-11	s	CAPACITOR,CERAMIC 0.1MF/25V F
C232	1-164-156-11	s	CAPACITOR,CERAMIC 0.1MF/25V F
C233	1-164-156-11	s	CAPACITOR,CERAMIC 0.1MF/25V F
C234	1-164-156-11	s	CAPACITOR,CERAMIC 0.1MF/25V F
C235	1-110-569-21	s	CAPACITOR CHIP TANTAL47MF/6.3V
C236	1-110-569-21	s	CAPACITOR CHIP TANTAL47MF/6.3V
C237	1-110-569-21	s	CAPACITOR CHIP TANTAL47MF/6.3V
C238	1-164-156-11	s	CAPACITOR,CERAMIC 0.1MF/25V F
C239	1-164-156-11	s	CAPACITOR,CERAMIC 0.1MF/25V F
C240	1-110-569-21	s	CAPACITOR CHIP TANTAL47MF/6.3V
C241	1-164-156-11	s	CAPACITOR,CERAMIC 0.1MF/25V F
C242	1-164-156-11	s	CAPACITOR,CERAMIC 0.1MF/25V F
C243	1-164-156-11	s	CAPACITOR,CERAMIC 0.1MF/25V F
C244	1-164-156-11	s	CAPACITOR,CERAMIC 0.1MF/25V F
C245	1-164-156-11	s	CAPACITOR,CERAMIC 0.1MF/25V F
C246	1-164-156-11	s	CAPACITOR,CERAMIC 0.1MF/25V F
C247	1-164-156-11	s	CAPACITOR,CERAMIC 0.1MF/25V F
C248	1-110-569-21	s	CAPACITOR CHIP TANTAL47MF/6.3V
C249	1-110-569-21	s	CAPACITOR CHIP TANTAL47MF/6.3V
C250	1-164-156-11	s	CAPACITOR,CERAMIC 0.1MF/25V F
C251	1-110-569-21	s	CAPACITOR CHIP TANTAL47MF/6.3V
C252	1-110-569-21	s	CAPACITOR CHIP TANTAL47MF/6.3V
C253	1-162-919-11	s	CAPACITOR,CERAMIC 22PF/50V CH
C255	1-162-962-11	s	CAPACITOR,CERAMIC 470PF/50V(B)
C256	1-162-962-11	s	CAPACITOR,CERAMIC 470PF/50V(B)
C257	1-164-156-11	s	CAPACITOR,CERAMIC 0.1MF/25V F
C258	1-164-156-11	s	CAPACITOR,CERAMIC 0.1MF/25V F
C301	1-137-689-11	s	CAP, CHIP TANTALUM ELECT 47MF
C302	1-164-156-11	s	CAPACITOR,CERAMIC 0.1MF/25V F
C303	1-164-156-11	s	CAPACITOR,CERAMIC 0.1MF/25V F
C304	1-113-682-11	s	CAPACITOR,TANTALUM 33MF/10V
C305	1-164-156-11	s	CAPACITOR,CERAMIC 0.1MF/25V F

(DPR-141B BOARD)

Ref. No. or Q'ty	Part No.	SP	Description
C306	1-164-156-11	s	CAPACITOR,CERAMIC 0.1MF/25V F
C307	1-164-156-11	s	CAPACITOR,CERAMIC 0.1MF/25V F
C308	1-164-156-11	s	CAPACITOR,CERAMIC 0.1MF/25V F
C309	1-162-968-11	s	CAPACITOR,CERAMIC 4700PF/50V B
C310	1-164-156-11	s	CAPACITOR,CERAMIC 0.1MF/25V F
C311	1-162-966-11	s	CAPACITOR,CERAMIC 2200PF/50V B
C312	1-162-923-11	s	CAPACITOR,CERAMIC 47PF/50V CH
C313	1-162-923-11	s	CAPACITOR,CERAMIC 47PF/50V CH
C314	1-164-156-11	s	CAPACITOR,CERAMIC 0.1MF/25V F
C315	1-164-156-11	s	CAPACITOR,CERAMIC 0.1MF/25V F
C316	1-164-156-11	s	CAPACITOR,CERAMIC 0.1MF/25V F
C317	1-164-156-11	s	CAPACITOR,CERAMIC 0.1MF/25V F
C318	1-164-156-11	s	CAPACITOR,CERAMIC 0.1MF/25V F
C319	1-113-682-11	s	CAPACITOR,TANTALUM 33MF/10V
C320	1-164-156-11	s	CAPACITOR,CERAMIC 0.1MF/25V F
C321	1-113-682-11	s	CAPACITOR,TANTALUM 33MF/10V
C322	1-164-156-11	s	CAPACITOR,CERAMIC 0.1MF/25V F
C323	1-164-156-11	s	CAPACITOR,CERAMIC 0.1MF/25V F
C324	1-164-156-11	s	CAPACITOR,CERAMIC 0.1MF/25V F
C325	1-162-910-11	s	CAPACITOR,CERAMIC 5PF/50V 1608
C326	1-164-156-11	s	CAPACITOR,CERAMIC 0.1MF/25V F
C327	1-164-156-11	s	CAPACITOR,CERAMIC 0.1MF/25V F
C328	1-162-915-11	s	CAPACITOR,CERAMIC 10PF/50V CH
C330	1-164-156-11	s	CAPACITOR,CERAMIC 0.1MF/25V F
C331	1-162-920-11	s	CAPACITOR,CERAMIC 27PF/50V CH
C333	1-164-156-11	s	CAPACITOR,CERAMIC 0.1MF/25V F
C334	1-162-910-11	s	CAPACITOR,CERAMIC 5PF/50V 1608
C335	1-164-156-11	s	CAPACITOR,CERAMIC 0.1MF/25V F
C336	1-164-156-11	s	CAPACITOR,CERAMIC 0.1MF/25V F
C337	1-162-915-11	s	CAPACITOR,CERAMIC 10PF/50V CH
C339	1-164-156-11	s	CAPACITOR,CERAMIC 0.1MF/25V F
C340	1-162-920-11	s	CAPACITOR,CERAMIC 27PF/50V CH
C342	1-113-682-11	s	CAPACITOR,TANTALUM 33MF/10V
C343	1-113-682-11	s	CAPACITOR,TANTALUM 33MF/10V
C344	1-162-910-11	s	CAPACITOR,CERAMIC 5PF/50V 1608
C345	1-164-156-11	s	CAPACITOR,CERAMIC 0.1MF/25V F
C346	1-164-156-11	s	CAPACITOR,CERAMIC 0.1MF/25V F
C347	1-162-915-11	s	CAPACITOR,CERAMIC 10PF/50V CH
C349	1-164-156-11	s	CAPACITOR,CERAMIC 0.1MF/25V F
C350	1-162-920-11	s	CAPACITOR,CERAMIC 27PF/50V CH
C352	1-164-156-11	s	CAPACITOR,CERAMIC 0.1MF/25V F
C353	1-164-156-11	s	CAPACITOR,CERAMIC 0.1MF/25V F
C354	1-164-156-11	s	CAPACITOR,CERAMIC 0.1MF/25V F
C355	1-164-156-11	s	CAPACITOR,CERAMIC 0.1MF/25V F
C357	1-164-156-11	s	CAPACITOR,CERAMIC 0.1MF/25V F
C358	1-164-156-11	s	CAPACITOR,CERAMIC 0.1MF/25V F
C359	1-110-569-21	s	CAPACITOR CHIP TANTAL47MF/6.3V
C360	1-164-156-11	s	CAPACITOR,CERAMIC 0.1MF/25V F
C361	1-110-569-21	s	CAPACITOR CHIP TANTAL47MF/6.3V
C362	1-164-156-11	s	CAPACITOR,CERAMIC 0.1MF/25V F
C363	1-110-569-21	s	CAPACITOR CHIP TANTAL47MF/6.3V
C364	1-164-156-11	s	CAPACITOR,CERAMIC 0.1MF/25V F
C365	1-110-569-21	s	CAPACITOR CHIP TANTAL47MF/6.3V
C366	1-164-156-11	s	CAPACITOR,CERAMIC 0.1MF/25V F
C367	1-110-569-21	s	CAPACITOR CHIP TANTAL47MF/6.3V
C368	1-164-156-11	s	CAPACITOR,CERAMIC 0.1MF/25V F
C369	1-110-569-21	s	CAPACITOR CHIP TANTAL47MF/6.3V
C370	1-164-156-11	s	CAPACITOR,CERAMIC 0.1MF/25V F
C371	1-110-569-21	s	CAPACITOR CHIP TANTAL47MF/6.3V

(DPR-141B BOARD)

Ref. No. or Q'ty	Part No.	SP	Description
C372	1-164-156-11	s	CAPACITOR,CERAMIC 0.1MF/25V F
C373	1-110-569-21	s	CAPACITOR CHIP TANTAL47MF/6.3V
C374	1-113-682-11	s	CAPACITOR,TANTALUM 33MF/10V
C375	1-113-682-11	s	CAPACITOR,TANTALUM 33MF/10V
C376	1-164-156-11	s	CAPACITOR,CERAMIC 0.1MF/25V F
C377	1-164-156-11	s	CAPACITOR,CERAMIC 0.1MF/25V F
C378	1-164-156-11	s	CAPACITOR,CERAMIC 0.1MF/25V F
C379	1-164-156-11	s	CAPACITOR,CERAMIC 0.1MF/25V F
C380	1-107-685-11	s	CAPACITOR TANTALUM 15MF/6.3V
C381	1-164-156-11	s	CAPACITOR,CERAMIC 0.1MF/25V F
C382	1-164-156-11	s	CAPACITOR,CERAMIC 0.1MF/25V F
C383	1-113-682-11	s	CAPACITOR,TANTALUM 33MF/10V
C384	1-164-156-11	s	CAPACITOR,CERAMIC 0.1MF/25V F
C385	1-164-156-11	s	CAPACITOR,CERAMIC 0.1MF/25V F
C386	1-113-682-11	s	CAPACITOR,TANTALUM 33MF/10V
C387	1-164-156-11	s	CAPACITOR,CERAMIC 0.1MF/25V F
C388	1-164-156-11	s	CAPACITOR,CERAMIC 0.1MF/25V F
C389	1-164-156-11	s	CAPACITOR,CERAMIC 0.1MF/25V F
C390	1-162-923-11	s	CAPACITOR,CERAMIC 47PF/50V CH
C391	1-104-851-11	s	CAPACITOR,TANTALUM 10MF/10V
C392	1-164-156-11	s	CAPACITOR,CERAMIC 0.1MF/25V F
C393	1-164-156-11	s	CAPACITOR,CERAMIC 0.1MF/25V F
C394	1-164-156-11	s	CAPACITOR,CERAMIC 0.1MF/25V F
C395	1-164-156-11	s	CAPACITOR,CERAMIC 0.1MF/25V F
C396	1-164-156-11	s	CAPACITOR,CERAMIC 0.1MF/25V F
C397	1-164-156-11	s	CAPACITOR,CERAMIC 0.1MF/25V F
C398	1-164-156-11	s	CAPACITOR,CERAMIC 0.1MF/25V F
C399	1-164-156-11	s	CAPACITOR,CERAMIC 0.1MF/25V F
C400	1-164-156-11	s	CAPACITOR,CERAMIC 0.1MF/25V F
C401	1-113-682-11	s	CAPACITOR,TANTALUM 33MF/10V
C402	1-113-682-11	s	CAPACITOR,TANTALUM 33MF/10V
C403	1-164-156-11	s	CAPACITOR,CERAMIC 0.1MF/25V F
C404	1-164-156-11	s	CAPACITOR,CERAMIC 0.1MF/25V F
C408	1-162-919-11	s	CAPACITOR,CERAMIC 22PF/50V CH
C410	1-164-156-11	s	CAPACITOR,CERAMIC 0.1MF/25V F
C411	1-162-919-11	s	CAPACITOR,CERAMIC 22PF/50V CH
C501	1-164-156-11	s	CAPACITOR,CERAMIC 0.1MF/25V F
C502	1-164-156-11	s	CAPACITOR,CERAMIC 0.1MF/25V F
C503	1-164-156-11	s	CAPACITOR,CERAMIC 0.1MF/25V F
C504	1-164-156-11	s	CAPACITOR,CERAMIC 0.1MF/25V F
C507	1-164-315-11	s	CAPACITOR,CERAMIC 470PF/50V CH
C508	1-162-964-11	s	CAPACITOR,CERAMIC 1000PF/50V B
C509	1-162-922-11	s	CAPACITOR,CERAMIC 39PF/50V CH
C510	1-162-964-11	s	CAPACITOR,CERAMIC 1000PF/50V B
C511	1-162-964-11	s	CAPACITOR,CERAMIC 1000PF/50V B
C512	1-113-682-11	s	CAPACITOR,TANTALUM 33MF/10V
C513	1-164-156-11	s	CAPACITOR,CERAMIC 0.1MF/25V F
C514	1-164-156-11	s	CAPACITOR,CERAMIC 0.1MF/25V F
C515	1-113-682-11	s	CAPACITOR,TANTALUM 33MF/10V
C516	1-164-156-11	s	CAPACITOR,CERAMIC 0.1MF/25V F
C517	1-164-156-11	s	CAPACITOR,CERAMIC 0.1MF/25V F
C518	1-164-156-11	s	CAPACITOR,CERAMIC 0.1MF/25V F
C521	1-164-156-11	s	CAPACITOR,CERAMIC 0.1MF/25V F
C522	1-110-569-21	s	CAPACITOR CHIP TANTAL47MF/6.3V
C523	1-164-156-11	s	CAPACITOR,CERAMIC 0.1MF/25V F
C524	1-164-156-11	s	CAPACITOR,CERAMIC 0.1MF/25V F
C527	1-164-156-11	s	CAPACITOR,CERAMIC 0.1MF/25V F
C528	1-164-156-11	s	CAPACITOR,CERAMIC 0.1MF/25V F
C529	1-164-315-11	s	CAPACITOR,CERAMIC 470PF/50V CH

(DPR-141B BOARD)

Ref. No. or Q'ty	Part No.	SP	Description
C530	1-164-156-11	s	CAPACITOR,CERAMIC 0.1MF/25V F
C531	1-164-156-11	s	CAPACITOR,CERAMIC 0.1MF/25V F
C532	1-110-569-21	s	CAPACITOR CHIP TANTAL47MF/6.3V
C534	1-164-156-11	s	CAPACITOR,CERAMIC 0.1MF/25V F
C535	1-164-156-11	s	CAPACITOR,CERAMIC 0.1MF/25V F
C536	1-164-156-11	s	CAPACITOR,CERAMIC 0.1MF/25V F
C537	1-164-156-11	s	CAPACITOR,CERAMIC 0.1MF/25V F
C539	1-164-156-11	s	CAPACITOR,CERAMIC 0.1MF/25V F
C546	1-164-156-11	s	CAPACITOR,CERAMIC 0.1MF/25V F
C547	1-164-156-11	s	CAPACITOR,CERAMIC 0.1MF/25V F
C548	1-162-922-11	s	CAPACITOR,CERAMIC 39PF/50V CH
C549	1-162-922-11	s	CAPACITOR,CERAMIC 39PF/50V CH
C601	1-164-156-11	s	CAPACITOR,CERAMIC 0.1MF/25V F
C603	1-110-569-21	s	CAPACITOR CHIP TANTAL47MF/6.3V
C604	1-164-156-11	s	CAPACITOR,CERAMIC 0.1MF/25V F
C605	1-164-315-11	s	CAPACITOR,CERAMIC 470PF/50V CH
C606	1-164-315-11	s	CAPACITOR,CERAMIC 470PF/50V CH
C611	1-164-156-11	s	CAPACITOR,CERAMIC 0.1MF/25V F
C612	1-164-156-11	s	CAPACITOR,CERAMIC 0.1MF/25V F
C613	1-164-156-11	s	CAPACITOR,CERAMIC 0.1MF/25V F
C614	1-110-569-21	s	CAPACITOR CHIP TANTAL47MF/6.3V
C615	1-164-156-11	s	CAPACITOR,CERAMIC 0.1MF/25V F
C621	1-110-569-21	s	CAPACITOR CHIP TANTAL47MF/6.3V
C622	1-164-156-11	s	CAPACITOR,CERAMIC 0.1MF/25V F
C623	1-164-156-11	s	CAPACITOR,CERAMIC 0.1MF/25V F
C631	1-110-569-21	s	CAPACITOR CHIP TANTAL47MF/6.3V
C632	1-164-156-11	s	CAPACITOR,CERAMIC 0.1MF/25V F
C633	1-164-156-11	s	CAPACITOR,CERAMIC 0.1MF/25V F
C651	1-164-156-11	s	CAPACITOR,CERAMIC 0.1MF/25V F
C652	1-164-156-11	s	CAPACITOR,CERAMIC 0.1MF/25V F
C653	1-164-156-11	s	CAPACITOR,CERAMIC 0.1MF/25V F
C654	1-110-569-21	s	CAPACITOR CHIP TANTAL47MF/6.3V
C655	1-164-156-11	s	CAPACITOR,CERAMIC 0.1MF/25V F
C656	1-164-315-11	s	CAPACITOR,CERAMIC 470PF/50V CH
C657	1-164-156-11	s	CAPACITOR,CERAMIC 0.1MF/25V F
C658	1-164-156-11	s	CAPACITOR,CERAMIC 0.1MF/25V F
C701	1-162-964-11	s	CAPACITOR,CERAMIC 1000PF/50V B
C702	1-162-964-11	s	CAPACITOR,CERAMIC 1000PF/50V B
C703	1-162-964-11	s	CAPACITOR,CERAMIC 1000PF/50V B
C704	1-165-176-11	s	CAPACITOR,CERAMIC 47000PF/16V
C705	1-135-149-21	s	CAPACITOR TANTALUM 2.2MF/10V
C711	1-162-910-11	s	CAPACITOR,CERAMIC 5PF/50V 1608
C712	1-162-910-11	s	CAPACITOR,CERAMIC 5PF/50V 1608
C714	1-164-156-11	s	CAPACITOR,CERAMIC 0.1MF/25V F
C715	1-110-569-21	s	CAPACITOR CHIP TANTAL47MF/6.3V
C716	1-164-156-11	s	CAPACITOR,CERAMIC 0.1MF/25V F
C717	1-164-315-11	s	CAPACITOR,CERAMIC 470PF/50V CH
C727	1-164-156-11	s	CAPACITOR,CERAMIC 0.1MF/25V F
C728	1-164-156-11	s	CAPACITOR,CERAMIC 0.1MF/25V F
C731	1-162-966-11	s	CAPACITOR,CERAMIC 2200PF/50V B
C732	1-162-964-11	s	CAPACITOR,CERAMIC 1000PF/50V B
C733	1-165-176-11	s	CAPACITOR,CERAMIC 47000PF/16V
C734	1-162-964-11	s	CAPACITOR,CERAMIC 1000PF/50V B
C735	1-162-964-11	s	CAPACITOR,CERAMIC 1000PF/50V B
C736	1-135-149-21	s	CAPACITOR TANTALUM 2.2MF/10V
C751	1-110-569-21	s	CAPACITOR CHIP TANTAL47MF/6.3V
C752	1-164-156-11	s	CAPACITOR,CERAMIC 0.1MF/25V F
C753	1-164-315-11	s	CAPACITOR,CERAMIC 470PF/50V CH
C754	1-162-915-11	s	CAPACITOR,CERAMIC 10PF/50V CH

(DPR-141B BOARD)

Ref. No. or Q'ty	Part No.	SP	Description
C755	1-162-915-11	s	CAPACITOR,CERAMIC 10PF/50V CH
C756	1-164-156-11	s	CAPACITOR,CERAMIC 0.1MF/25V F
C757	1-164-156-11	s	CAPACITOR,CERAMIC 0.1MF/25V F
C758	1-164-156-11	s	CAPACITOR,CERAMIC 0.1MF/25V F
C759	1-164-315-11	s	CAPACITOR,CERAMIC 470PF/50V CH
C771	1-164-156-11	s	CAPACITOR,CERAMIC 0.1MF/25V F
C772	1-110-569-21	s	CAPACITOR CHIP TANTAL47MF/6.3V
C773	1-164-156-11	s	CAPACITOR,CERAMIC 0.1MF/25V F
C774	1-164-156-11	s	CAPACITOR,CERAMIC 0.1MF/25V F
C775	1-164-156-11	s	CAPACITOR,CERAMIC 0.1MF/25V F
C776	1-164-315-11	s	CAPACITOR,CERAMIC 470PF/50V CH
C777	1-164-156-11	s	CAPACITOR,CERAMIC 0.1MF/25V F
C778	1-164-156-11	s	CAPACITOR,CERAMIC 0.1MF/25V F
C779	1-164-156-11	s	CAPACITOR,CERAMIC 0.1MF/25V F
C780	1-110-569-21	s	CAPACITOR CHIP TANTAL47MF/6.3V
C781	1-164-156-11	s	CAPACITOR,CERAMIC 0.1MF/25V F
C782	1-164-156-11	s	CAPACITOR,CERAMIC 0.1MF/25V F
C783	1-164-156-11	s	CAPACITOR,CERAMIC 0.1MF/25V F
C784	1-110-569-21	s	CAPACITOR CHIP TANTAL47MF/6.3V
C785	1-164-315-11	s	CAPACITOR,CERAMIC 470PF/50V CH
C786	1-164-156-11	s	CAPACITOR,CERAMIC 0.1MF/25V F
C801	1-164-156-11	s	CAPACITOR,CERAMIC 0.1MF/25V F
C802	1-164-156-11	s	CAPACITOR,CERAMIC 0.1MF/25V F
C803	1-110-569-21	s	CAPACITOR CHIP TANTAL47MF/6.3V
C804	1-164-156-11	s	CAPACITOR,CERAMIC 0.1MF/25V F
C805	1-164-156-11	s	CAPACITOR,CERAMIC 0.1MF/25V F
C806	1-113-682-11	s	CAPACITOR,TANTALUM 33MF/10V
C807	1-164-156-11	s	CAPACITOR,CERAMIC 0.1MF/25V F
C808	1-164-315-11	s	CAPACITOR,CERAMIC 470PF/50V CH
C809	1-164-156-11	s	CAPACITOR,CERAMIC 0.1MF/25V F
C810	1-164-156-11	s	CAPACITOR,CERAMIC 0.1MF/25V F
C811	1-164-156-11	s	CAPACITOR,CERAMIC 0.1MF/25V F
C812	1-164-156-11	s	CAPACITOR,CERAMIC 0.1MF/25V F
C813	1-164-156-11	s	CAPACITOR,CERAMIC 0.1MF/25V F
C814	1-164-156-11	s	CAPACITOR,CERAMIC 0.1MF/25V F
C815	1-164-156-11	s	CAPACITOR,CERAMIC 0.1MF/25V F
C816	1-164-156-11	s	CAPACITOR,CERAMIC 0.1MF/25V F
C817	1-162-964-11	s	CAPACITOR,CERAMIC 1000PF/50V B
C818	1-162-964-11	s	CAPACITOR,CERAMIC 1000PF/50V B
C819	1-164-156-11	s	CAPACITOR,CERAMIC 0.1MF/25V F
C821	1-109-994-11	s	CAPACITOR,CHIP CERAMIC 2.2MF B
C822	1-164-156-11	s	CAPACITOR,CERAMIC 0.1MF/25V F
C823	1-164-315-11	s	CAPACITOR,CERAMIC 470PF/50V CH
C824	1-164-156-11	s	CAPACITOR,CERAMIC 0.1MF/25V F
C825	1-162-927-11	s	CAPACITOR,CERAMIC 100PF/50V CH
C826	1-110-569-21	s	CAPACITOR CHIP TANTAL47MF/6.3V
C827	1-164-156-11	s	CAPACITOR,CERAMIC 0.1MF/25V F
C828	1-164-156-11	s	CAPACITOR,CERAMIC 0.1MF/25V F
C829	1-104-823-11	s	CAPACITOR,TANTALUM 47MF/16V
C830	1-107-689-21	s	CAPACITOR,TANTALUM 1MF/35V
C831	1-164-156-11	s	CAPACITOR,CERAMIC 0.1MF/25V F
C832	1-164-156-11	s	CAPACITOR,CERAMIC 0.1MF/25V F
C833	1-113-682-11	s	CAPACITOR,TANTALUM 33MF/10V
C834	1-164-315-11	s	CAPACITOR,CERAMIC 470PF/50V CH
C835	1-164-156-11	s	CAPACITOR,CERAMIC 0.1MF/25V F
C836	1-164-156-11	s	CAPACITOR,CERAMIC 0.1MF/25V F
C837	1-110-569-21	s	CAPACITOR CHIP TANTAL47MF/6.3V
C901	1-164-156-11	s	CAPACITOR,CERAMIC 0.1MF/25V F
C902	1-164-156-11	s	CAPACITOR,CERAMIC 0.1MF/25V F

(DPR-141B BOARD)

Ref. No. or Q'ty	Part No.	SP	Description
C903	1-113-991-11	s	CAPACITOR TANTALUM 33MF/16V
C904	1-113-991-11	s	CAPACITOR TANTALUM 33MF/16V
C923	1-164-156-11	s	CAPACITOR,CERAMIC 0.1MF/25V F
C924	1-113-682-11	s	CAPACITOR,TANTALUM 33MF/10V
C925	1-164-156-11	s	CAPACITOR,CERAMIC 0.1MF/25V F
C926	1-164-156-11	s	CAPACITOR,CERAMIC 0.1MF/25V F
C927	1-164-156-11	s	CAPACITOR,CERAMIC 0.1MF/25V F
C928	1-164-156-11	s	CAPACITOR,CERAMIC 0.1MF/25V F
C929	1-164-156-11	s	CAPACITOR,CERAMIC 0.1MF/25V F
C930	1-164-156-11	s	CAPACITOR,CERAMIC 0.1MF/25V F
C931	1-162-927-11	s	CAPACITOR,CERAMIC 100PF/50V CH
C932	1-162-927-11	s	CAPACITOR,CERAMIC 100PF/50V CH
C933	1-162-927-11	s	CAPACITOR,CERAMIC 100PF/50V CH
C934	1-162-927-11	s	CAPACITOR,CERAMIC 100PF/50V CH
C935	1-162-927-11	s	CAPACITOR,CERAMIC 100PF/50V CH
C936	1-162-927-11	s	CAPACITOR,CERAMIC 100PF/50V CH
C937	1-162-927-11	s	CAPACITOR,CERAMIC 100PF/50V CH
C938	1-162-927-11	s	CAPACITOR,CERAMIC 100PF/50V CH
C939	1-104-546-11	s	CAPACITOR,FILM 0.0039MF/16V
C940	1-104-546-11	s	CAPACITOR,FILM 0.0039MF/16V
C941	1-164-392-11	s	CAPACITOR CERAMIC 390PF/50V CH
C942	1-164-392-11	s	CAPACITOR CERAMIC 390PF/50V CH
C943	1-162-915-11	s	CAPACITOR,CERAMIC 10PF/50V CH
C944	1-162-915-11	s	CAPACITOR,CERAMIC 10PF/50V CH
C945	1-162-959-11	s	CAPACITOR,CERAMIC 330PF/50V SL
C946	1-162-959-11	s	CAPACITOR,CERAMIC 330PF/50V SL
C947	1-162-927-11	s	CAPACITOR,CERAMIC 100PF/50V CH
C948	1-162-927-11	s	CAPACITOR,CERAMIC 100PF/50V CH
C949	1-164-156-11	s	CAPACITOR,CERAMIC 0.1MF/25V F
C950	1-164-156-11	s	CAPACITOR,CERAMIC 0.1MF/25V F
C951	1-113-682-11	s	CAPACITOR,TANTALUM 33MF/10V
C952	1-113-682-11	s	CAPACITOR,TANTALUM 33MF/10V
C954	1-164-156-11	s	CAPACITOR,CERAMIC 0.1MF/25V F
C955	1-164-156-11	s	CAPACITOR,CERAMIC 0.1MF/25V F
C956	1-110-569-21	s	CAPACITOR CHIP TANTAL47MF/6.3V
C957	1-113-682-11	s	CAPACITOR,TANTALUM 33MF/10V
C958	1-113-682-11	s	CAPACITOR,TANTALUM 33MF/10V
C959	1-164-315-11	s	CAPACITOR,CERAMIC 470PF/50V CH
C960	1-164-315-11	s	CAPACITOR,CERAMIC 470PF/50V CH
C961	1-164-156-11	s	CAPACITOR,CERAMIC 0.1MF/25V F
C962	1-164-156-11	s	CAPACITOR,CERAMIC 0.1MF/25V F
C965	1-104-913-11	s	CAPACITOR,TANTALUM 10MF/16V
C966	1-104-913-11	s	CAPACITOR,TANTALUM 10MF/16V
C971	1-104-913-11	s	CAPACITOR,TANTALUM 10MF/16V
C972	1-104-913-11	s	CAPACITOR,TANTALUM 10MF/16V
C973	1-104-913-11	s	CAPACITOR,TANTALUM 10MF/16V
C985	1-162-923-11	s	CAPACITOR,CERAMIC 47PF/50V CH
C986	1-162-923-11	s	CAPACITOR,CERAMIC 47PF/50V CH
C987	1-162-927-11	s	CAPACITOR,CERAMIC 100PF/50V CH
C988	1-162-927-11	s	CAPACITOR,CERAMIC 100PF/50V CH
C989	1-164-156-11	s	CAPACITOR,CERAMIC 0.1MF/25V F
C990	1-164-156-11	s	CAPACITOR,CERAMIC 0.1MF/25V F
C991	1-164-156-11	s	CAPACITOR,CERAMIC 0.1MF/25V F
C992	1-164-156-11	s	CAPACITOR,CERAMIC 0.1MF/25V F
C993	1-162-965-11	s	CAPACITOR,CERAMIC 1500PF/50V B
C994	1-162-965-11	s	CAPACITOR,CERAMIC 1500PF/50V B
C995	1-164-156-11	s	CAPACITOR,CERAMIC 0.1MF/25V F
C996	1-164-156-11	s	CAPACITOR,CERAMIC 0.1MF/25V F
C997	1-164-156-11	s	CAPACITOR,CERAMIC 0.1MF/25V F

(DPR-141B BOARD)

Ref. No. or Q'ty	Part No.	SP	Description	
C998	1-162-966-11	s	CAPACITOR,CERAMIC 2200PF/50V B	
C999	1-164-156-11	s	CAPACITOR,CERAMIC 0.1MF/25V F	
C1000	1-164-156-11	s	CAPACITOR,CERAMIC 0.1MF/25V F	
C1001	1-162-966-11	s	CAPACITOR,CERAMIC 2200PF/50V B	
C1002	1-127-692-11	s	CAP, CHIP CERAMIC 10MF B 3216	
C1003	1-127-692-11	s	CAP, CHIP CERAMIC 10MF B 3216	
C1004	1-127-692-11	s	CAP, CHIP CERAMIC 10MF B 3216	
C1005	1-127-692-11	s	CAP, CHIP CERAMIC 10MF B 3216	
C1006	1-164-156-11	s	CAPACITOR,CERAMIC 0.1MF/25V F	
CN3	1-770-452-21	o	CONNECTOR, BOARD TO BOARD 30P	
CN4	1-774-391-11	o	CONNECTOR, BOARD TO BOARD 60P	
CN5	1-580-267-11	o	CONNECTOR,BOARD TO BOARD 20P	
CN6	1-793-091-11	o	CONNECTOR, BOARD TO BOARD 60P	
CN7	1-785-551-11	o	CONNECTOR, BOARD TO BOARD 120P	
CN9	1-785-849-11	o	CONNECTOR, BOARD TO BOARD 40P	
D101	8-719-029-63	s	DIODE RD4.3UH-T1	
D102	8-719-029-63	s	DIODE RD4.3UH-T1	
D301	8-719-421-69	s	DIODE MA133	
D302	8-719-421-69	s	DIODE MA133	
D303	8-719-421-69	s	DIODE MA133	
D304	8-719-421-69	s	DIODE MA133	
D701	8-719-027-95	s	DIODE HSM88WK	
D702	8-719-041-39	s	DIODE KV1470	(5MA)
D713	8-719-041-39	s	DIODE KV1470	(5MA)
D714	8-719-027-95	s	DIODE HSM88WK	
D821	8-719-041-39	s	DIODE KV1470	(5MA)
D901	8-719-941-09	s	DIODE DAP202U	
D902	8-719-941-09	s	DIODE DAP202U	
FB301	1-414-445-11	s	FERRITE, EMI (SMD)	
FB302	1-414-445-11	s	FERRITE, EMI (SMD)	
FB303	1-414-445-11	s	FERRITE, EMI (SMD)	
FB304	1-414-445-11	s	FERRITE, EMI (SMD)	
FL301	1-233-742-11	s	FILTER, LOW PASS	
FL302	1-233-740-11	s	FILTER, LOW PASS	
FL303	1-233-742-11	s	FILTER, LOW PASS	
FL304	1-233-740-11	s	FILTER, LOW PASS	
FL305	1-233-742-11	s	FILTER, LOW PASS	
FL306	1-233-740-11	s	FILTER, LOW PASS	
FL307	1-233-740-11	s	FILTER, LOW PASS	
FL501	1-233-345-21	s	FILTER, LOW PASS (5.5MHZ)	
FL502	1-233-776-11	s	FILTER, LOW PASS	
FL503	1-233-776-11	s	FILTER, LOW PASS	
IC101	8-759-185-42	s	IC LM4040AIM3-2.5	
IC102	8-759-669-72	s	IC TL064CPWR	
IC103	8-759-669-45	s	IC TL062CPWR-12	
IC104	8-759-673-43	s	IC MM74HC04MTCX	
IC105	8-759-523-95	s	IC TC74VHC74FT(EL)	
IC106	8-752-376-32	s	IC CXD2310AR	
IC107	8-752-376-32	s	IC CXD2310AR	
IC108	8-752-376-32	s	IC CXD2310AR	
IC201	8-759-674-44	s	IC MM74HCT244MTCX	
IC202	8-759-669-72	s	IC TL064CPWR	
IC204	8-759-491-46	s	IC TC74VHCT04AFT (EL)	
IC205	8-759-058-62	s	IC TC7S08FU-TE85R	
IC206	8-759-196-93	s	IC TC7SH00FU-TE85R	
IC208	8-759-196-96	s	IC TC7SH08FU (TE85R)	
IC209	8-759-447-77	s	IC TC7WH74FU (TE12R)	

(DPR-141B BOARD)

Ref. No. or Q'ty	Part No.	SP	Description	
IC211	8-752-360-44	s	IC CXK1203AR	
IC212	8-752-360-44	s	IC CXK1203AR	
IC213	8-752-360-44	s	IC CXK1203AR	
IC214	8-752-360-44	s	IC CXK1203AR	
IC215	8-759-058-62	s	IC TC7S08FU-TE85R	
IC217	8-759-491-46	s	IC TC74VHCT04AFT (EL)	
IC218	8-759-674-44	s	IC MM74HCT244MTCX	
IC219	8-759-196-93	s	IC TC7SH00FU-TE85R	
IC301	8-759-678-06	s	IC CAT24WC02JI-TE13	
IC302	8-759-064-36	s	IC MB88346BPFV	
IC303	8-759-523-04	s	IC TC74HC4538AFT	
IC304	8-759-058-58	s	IC TC7S04FU-TE85R	
IC305	8-759-485-79	s	IC TC7SET08FU (TE85L)	
IC306	8-759-673-37	s	IC MM74HC00MTCX	
IC307	8-752-363-60	s	IC CXD2307R-T4	
IC308	8-759-523-02	s	IC TC74HC4053AFT(EL)	
IC309	8-759-531-92	s	IC TC7WH04FU(TE12R)	
IC310	8-752-381-65	o	IC CXD606-101R	
IC311	8-759-485-79	s	IC TC7SET08FU (TE85L)	
IC312	8-759-184-64	s	IC TC4W66FU	
IC313	8-759-669-45	s	IC TL062CPWR-12	
IC314	8-759-271-86	s	IC TC7SH04FU	
IC315	8-759-491-46	s	IC TC74VHCT04AFT (EL)	
IC316	8-759-523-95	s	IC TC74VHC74FT(EL)	
IC317	8-759-485-79	s	IC TC7SET08FU (TE85L)	
IC318	8-759-546-74	s	IC TC7WH157FU(TE12R)	
IC319	8-752-334-64	s	IC CXD1171M	
IC320	8-759-196-93	s	IC TC7SH00FU-TE85R	
IC321	8-759-196-96	s	IC TC7SH08FU (TE85R)	
IC324	8-759-196-93	s	IC TC7SH00FU-TE85R	
IC325	8-759-196-96	s	IC TC7SH08FU (TE85R)	
IC501	8-759-464-95	s	IC AK6420AF-E2	
IC502	8-759-498-27	s	IC TK16074MTL	
IC503	8-759-498-27	s	IC TK16074MTL	
IC504	8-759-271-86	s	IC TC7SH04FU	
IC505	8-759-457-61	s	IC CXD8628BR	
IC506	8-759-485-79	s	IC TC7SET08FU (TE85L)	
IC509	8-759-524-50	s	IC TC74VHC541FT(EL)	
IC510	8-759-271-86	s	IC TC7SH04FU	
IC511	8-759-386-27	s	IC 74LCX04MTCX	
IC512	8-759-524-50	s	IC TC74VHC541FT(EL)	
IC513	8-759-485-79	s	IC TC7SET08FU (TE85L)	
IC514	8-752-363-60	s	IC CXD2307R-T4	
IC517	8-759-524-04	s	IC TC74VHC125FT (EL)	
IC518	8-759-524-04	s	IC TC74VHC125FT (EL)	
IC521	8-759-196-96	s	IC TC7SH08FU (TE85R)	
IC601	8-759-327-31	s	IC CXD2183R	
IC611	8-752-378-68	s	IC CXD3101R	
IC621	8-759-328-28	s	IC ZA4024	
IC631	8-759-328-28	s	IC ZA4024	
IC651	8-759-426-26	s	IC CXD8608R	
IC652	8-759-524-52	s	IC TC74VHC574FT(EL)	
IC653	8-759-524-52	s	IC TC74VHC574FT(EL)	
IC706	8-759-524-10	s	IC TC74VHC157FT (EL)	
IC711	8-752-375-05	s	IC CXD2191R	
IC751	8-752-929-66	s	IC CXP911016-016Q	
IC752	8-759-464-95	s	IC AK6420AF-E2	
IC771	8-759-385-90	s	IC CXD2187AR	
IC772	8-759-585-05	s	IC CXD8627BR	

(DPR-141B BOARD)

Ref. No. or Q'ty	Part No.	SP	Description
IC773	8-759-082-60	s	IC TC7S66FU
IC781	8-759-433-17	s	IC UPD482445LG4-B10-9MH-E2-HDC
IC801	8-759-529-45	s	IC IDT71V256SA15PZ-TL
IC811	8-752-374-96	s	IC CXD2190R
IC821	8-759-271-86	s	IC TC7SH04FU
IC822	8-759-271-86	s	IC TC7SH04FU
IC823	8-759-362-16	s	IC CXD2913AQ
IC824	8-759-327-01	s	IC NJM062V-TE2
IC825	8-759-429-28	s	IC CXD8630R
IC826	8-759-082-60	s	IC TC7S66FU
IC901	8-759-422-21	s	IC NJM4580VTE2
IC905	8-759-173-51	s	IC SM5872AS (ET)
IC906	8-759-422-21	s	IC NJM4580VTE2
IC907	8-759-422-21	s	IC NJM4580VTE2
IC908	8-759-422-21	s	IC NJM4580VTE2
IC911	8-752-374-97	s	IC CXD2705AR
IC912	8-759-674-62	s	IC MM74HCT541MTCX
IC913	8-759-523-94	s	IC TC74VHC32FT(EL)
IC917	8-759-833-99	s	IC MC74HC4052ADTR2
IC918	8-759-833-99	s	IC MC74HC4052ADTR2
IC919	8-759-422-21	s	IC NJM4580VTE2
IC921	8-759-422-21	s	IC NJM4580VTE2
IC923	8-759-462-08	s	IC AK5352-VF (E2)
IC924	8-759-447-77	s	IC TC7WH74FU (TE12R)
L101	1-412-951-11	s	INDUCTOR 10UH (2520)
L102	1-412-951-11	s	INDUCTOR 10UH (2520)
L103	1-412-951-11	s	INDUCTOR 10UH (2520)
L104	1-412-951-11	s	INDUCTOR 10UH (2520)
L105	1-412-951-11	s	INDUCTOR 10UH (2520)
L106	1-412-951-11	s	INDUCTOR 10UH (2520)
L107	1-412-951-11	s	INDUCTOR 10UH (2520)
L201	1-424-643-11	s	COIL, CHOKE 10UH
L301	1-412-955-11	s	INDUCTOR 22UH (2520)
L302	1-412-955-11	s	INDUCTOR 22UH (2520)
L303	1-410-371-41	s	CHIP INDUCTOR 1.5UH
L305	1-410-385-11	s	INDUCTOR,CHIP 22UH (3225)
L306	1-424-643-11	s	COIL, CHOKE 10UH
L307	1-412-955-11	s	INDUCTOR 22UH (2520)
L308	1-412-955-11	s	INDUCTOR 22UH (2520)
L309	1-412-955-11	s	INDUCTOR 22UH (2520)
L310	1-412-955-11	s	INDUCTOR 22UH (2520)
L501	1-414-398-11	s	INDUCTOR (SMD) 10UH
L502	1-414-398-11	s	INDUCTOR (SMD) 10UH
L503	1-414-398-11	s	INDUCTOR (SMD) 10UH
L601	1-410-381-11	s	INDUCTOR,CHIP 10UH (3225)
L611	1-414-398-11	s	INDUCTOR (SMD) 10UH
L651	1-414-398-11	s	INDUCTOR (SMD) 10UH
L701	1-410-378-11	s	INDUCTOR,CHIP 5.6UH (3225)
L711	1-410-389-31	s	INDUCTOR,CHIP 47UH (3225)
L713	1-410-740-31	s	INDUCTOR,CHIP 0.82UH
L751	1-414-398-11	s	INDUCTOR (SMD) 10UH
L771	1-414-398-11	s	INDUCTOR (SMD) 10UH
L772	1-414-398-11	s	INDUCTOR (SMD) 10UH
L781	1-414-398-11	s	INDUCTOR (SMD) 10UH
L801	1-414-398-11	s	INDUCTOR (SMD) 10UH
L811	1-414-398-11	s	INDUCTOR (SMD) 10UH
L821	1-414-398-11	s	INDUCTOR (SMD) 10UH
L823	1-414-398-11	s	INDUCTOR (SMD) 10UH
L824	1-414-398-11	s	INDUCTOR (SMD) 10UH

(DPR-141B BOARD)

Ref. No. or Q'ty	Part No.	SP	Description
L826	1-414-398-11	s	INDUCTOR (SMD) 10UH
L827	1-414-398-11	s	INDUCTOR (SMD) 10UH
L901	1-414-398-11	s	INDUCTOR (SMD) 10UH
L902	1-414-398-11	s	INDUCTOR (SMD) 10UH
L903	1-414-398-11	s	INDUCTOR (SMD) 10UH
L904	1-414-398-11	s	INDUCTOR (SMD) 10UH
L905	1-410-393-11	s	INDUCTOR,CHIP 100UH (3225)
L906	1-410-393-11	s	INDUCTOR,CHIP 100UH (3225)
L907	1-414-398-11	s	INDUCTOR (SMD) 10UH
L908	1-414-398-11	s	INDUCTOR (SMD) 10UH
L909	1-414-398-11	s	INDUCTOR (SMD) 10UH
L980	1-414-392-31	s	INDUCTOR (SMD) 1.0UH
L981	1-414-392-31	s	INDUCTOR (SMD) 1.0UH
L982	1-414-392-31	s	INDUCTOR (SMD) 1.0UH
L983	1-414-392-31	s	INDUCTOR (SMD) 1.0UH
L984	1-414-392-31	s	INDUCTOR (SMD) 1.0UH
LV825	1-411-984-11	s	COIL, VARIABLE
Q101	8-729-101-07	s	TRANSISTOR 2SB798
Q102	8-729-101-07	s	TRANSISTOR 2SB798
Q103	8-729-101-07	s	TRANSISTOR 2SB798
Q104	8-729-807-51	s	TRANSISTOR 2SD1623-S
Q105	8-729-427-74	s	TRANSISTOR XP4601-TXE
Q106	8-729-427-74	s	TRANSISTOR XP4601-TXE
Q107	8-729-427-74	s	TRANSISTOR XP4601-TXE
Q108	8-729-427-74	s	TRANSISTOR XP4601-TXE
Q301	8-729-427-83	s	TRANSISTOR XP6501-TXE
Q302	8-729-143-13	s	TRANSISTOR 2SC4176-B34
Q303	8-729-026-32	s	TRANSISTOR XP6534-TX
Q304	8-729-026-34	s	TRANSISTOR XP6435-TX
Q305	8-729-427-83	s	TRANSISTOR XP6501-TXE
Q306	8-729-143-13	s	TRANSISTOR 2SC4176-B34
Q307	8-729-026-32	s	TRANSISTOR XP6534-TX
Q308	8-729-026-34	s	TRANSISTOR XP6435-TX
Q309	8-729-427-83	s	TRANSISTOR XP6501-TXE
Q310	8-729-143-13	s	TRANSISTOR 2SC4176-B34
Q311	8-729-026-32	s	TRANSISTOR XP6534-TX
Q312	8-729-026-34	s	TRANSISTOR XP6435-TX
Q313	8-729-026-53	s	TRANSISTOR 2SA1576A-T106-QR
Q501	8-729-905-35	s	TRANSISTOR 2SC4081-R
Q502	8-729-905-35	s	TRANSISTOR 2SC4081-R
Q503	8-729-905-35	s	TRANSISTOR 2SC4081-R
Q504	8-729-905-35	s	TRANSISTOR 2SC4081-R
Q505	8-729-905-35	s	TRANSISTOR 2SC4081-R
Q506	8-729-026-53	s	TRANSISTOR 2SA1576A-T106-QR
Q507	8-729-055-85	s	TRANSISTOR UMT1N-TN
Q508	8-729-055-85	s	TRANSISTOR UMT1N-TN
Q823	8-729-029-14	s	TRANSISTOR DTC144EUA-T106
Q901	6-550-007-01	s	TRANSISTOR UMC3NTR
Q902	8-729-013-37	s	TRANSISTOR 2SC4213-AB-TE85L
Q903	8-729-013-37	s	TRANSISTOR 2SC4213-AB-TE85L
Q904	8-729-013-37	s	TRANSISTOR 2SC4213-AB-TE85L
Q905	8-729-013-37	s	TRANSISTOR 2SC4213-AB-TE85L
Q906	6-550-007-01	s	TRANSISTOR UMC3NTR
Q907	6-550-007-01	s	TRANSISTOR UMC3NTR
Q908	6-550-007-01	s	TRANSISTOR UMC3NTR
R101	1-218-881-11	s	RESISTOR, CHIP 27K 1/16W(1608)
R102	1-218-871-11	s	RESISTOR,CHIP 10K 1/16W (1608)

(DPR-141B BOARD)

Ref. No. or Q'ty	Part No.	SP	Description
R103	1-218-881-11	s	RESISTOR, CHIP 27K 1/16W(1608)
R104	1-218-861-11	s	RESISTOR,CHIP 3.9K 1/16W(1608)
R105	1-218-879-11	s	RESISTOR,CHIP 22K 1/16W (1608)
R106	1-216-823-11	s	RESISTOR, CHIP 1.5K 1/16W
R107	1-218-863-11	s	RESISTOR,CHIP 4.7K 1/16W(1608)
R108	1-218-853-11	s	RESISTOR,CHIP 1.8K 1/16W(1608)
R109	1-218-883-11	s	RESISTOR,CHIP 33K 1/16W (1608)
R110	1-216-823-11	s	RESISTOR, CHIP 1.5K 1/16W
R111	1-218-881-11	s	RESISTOR, CHIP 27K 1/16W(1608)
R112	1-218-863-11	s	RESISTOR,CHIP 4.7K 1/16W(1608)
R113	1-218-883-11	s	RESISTOR,CHIP 33K 1/16W (1608)
R114	1-218-885-11	s	RESISTOR,CHIP 39K 1/16W (1608)
R115	1-218-884-11	s	RESISTOR,CHIP 36K 1/16W (1608)
R116	1-218-875-11	s	RESISTOR,CHIP 15K 1/16W (1608)
R117	1-218-883-11	s	RESISTOR,CHIP 33K 1/16W (1608)
R118	1-218-883-11	s	RESISTOR,CHIP 33K 1/16W (1608)
R119	1-218-847-11	s	RESISTOR, CHIP 1K 1/16W (1608)
R120	1-218-847-11	s	RESISTOR, CHIP 1K 1/16W (1608)
R121	1-216-845-11	s	RESISTOR,CHIP 100K 1/16W(1608)
R122	1-216-864-11	s	CONDUCTOR, CHIP (1608)
R123	1-216-857-11	s	RESISTOR,CHIP 1M 1/16W(1608)
R124	1-216-857-11	s	RESISTOR,CHIP 1M 1/16W(1608)
R125	1-218-823-11	s	RESISTOR,CHIP 100 1/16W (1608)
R126	1-218-823-11	s	RESISTOR,CHIP 100 1/16W (1608)
R128	1-216-864-11	s	CONDUCTOR, CHIP (1608)
R130	1-216-864-11	s	CONDUCTOR, CHIP (1608)
R131	1-216-864-11	s	CONDUCTOR, CHIP (1608)
R133	1-216-797-11	s	RESISTOR,CHIP 10 1/16W 1608
R134	1-216-805-11	s	RESISTOR,CHIP 47 1/16W 1608
R136	1-216-864-11	s	CONDUCTOR, CHIP (1608)
R137	1-218-859-11	s	RESISTOR,CHIP 3.3K 1/16W(1608)
R138	1-218-835-11	s	RESISTOR,CHIP 330 1/16W (1608)
R139	1-218-859-11	s	RESISTOR,CHIP 3.3K 1/16W(1608)
R140	1-211-977-11	s	RESISTOR,CHIP 22 1/16W (1608)
R141	1-216-813-11	s	RESISTOR, CHIP 220 1/16W 1608
R142	1-216-797-11	s	RESISTOR,CHIP 10 1/16W 1608
R143	1-218-859-11	s	RESISTOR,CHIP 3.3K 1/16W(1608)
R144	1-218-835-11	s	RESISTOR,CHIP 330 1/16W (1608)
R145	1-218-859-11	s	RESISTOR,CHIP 3.3K 1/16W(1608)
R146	1-211-977-11	s	RESISTOR,CHIP 22 1/16W (1608)
R147	1-216-797-11	s	RESISTOR,CHIP 10 1/16W 1608
R148	1-216-813-11	s	RESISTOR, CHIP 220 1/16W 1608
R149	1-218-859-11	s	RESISTOR,CHIP 3.3K 1/16W(1608)
R150	1-218-835-11	s	RESISTOR,CHIP 330 1/16W (1608)
R151	1-218-859-11	s	RESISTOR,CHIP 3.3K 1/16W(1608)
R152	1-211-977-11	s	RESISTOR,CHIP 22 1/16W (1608)
R153	1-216-797-11	s	RESISTOR,CHIP 10 1/16W 1608
R154	1-216-813-11	s	RESISTOR, CHIP 220 1/16W 1608
R201	1-218-827-11	s	RESISTOR,CHIP 150 1/16W (1608)
R203	1-218-843-11	s	RESISTOR,CHIP 680 1/16W (1608)
R204	1-216-864-11	s	CONDUCTOR, CHIP (1608)
R206	1-218-823-11	s	RESISTOR,CHIP 100 1/16W (1608)
R208	1-218-847-11	s	RESISTOR, CHIP 1K 1/16W (1608)
R209	1-216-864-11	s	CONDUCTOR, CHIP (1608)
R210	1-218-871-11	s	RESISTOR,CHIP 10K 1/16W (1608)
R211	1-218-871-11	s	RESISTOR,CHIP 10K 1/16W (1608)
R212	1-218-871-11	s	RESISTOR,CHIP 10K 1/16W (1608)
R213	1-218-871-11	s	RESISTOR,CHIP 10K 1/16W (1608)
R214	1-218-871-11	s	RESISTOR,CHIP 10K 1/16W (1608)

(DPR-141B BOARD)

Ref. No. or Q'ty	Part No.	SP	Description
R215	1-218-871-11	s	RESISTOR,CHIP 10K 1/16W (1608)
R216	1-218-867-11	s	RESISTOR,CHIP 6.8K 1/16W(1608)
R217	1-218-867-11	s	RESISTOR,CHIP 6.8K 1/16W(1608)
R218	1-218-867-11	s	RESISTOR,CHIP 6.8K 1/16W(1608)
R219	1-218-867-11	s	RESISTOR,CHIP 6.8K 1/16W(1608)
R220	1-218-867-11	s	RESISTOR,CHIP 6.8K 1/16W(1608)
R221	1-218-867-11	s	RESISTOR,CHIP 6.8K 1/16W(1608)
R223	1-216-797-11	s	RESISTOR,CHIP 10 1/16W 1608
R224	1-216-864-11	s	CONDUCTOR, CHIP (1608)
R225	1-218-883-11	s	RESISTOR,CHIP 33K 1/16W (1608)
R226	1-218-883-11	s	RESISTOR,CHIP 33K 1/16W (1608)
R227	1-218-883-11	s	RESISTOR,CHIP 33K 1/16W (1608)
R228	1-216-797-11	s	RESISTOR,CHIP 10 1/16W 1608
R229	1-218-883-11	s	RESISTOR,CHIP 33K 1/16W (1608)
R230	1-218-883-11	s	RESISTOR,CHIP 33K 1/16W (1608)
R231	1-218-883-11	s	RESISTOR,CHIP 33K 1/16W (1608)
R233	1-216-805-11	s	RESISTOR,CHIP 47 1/16W 1608
R234	1-218-823-11	s	RESISTOR,CHIP 100 1/16W (1608)
R235	1-216-864-11	s	CONDUCTOR, CHIP (1608)
R237	1-216-825-11	s	RESISTOR,CHIP 2.2K 1/16W 1608
R238	1-216-797-11	s	RESISTOR,CHIP 10 1/16W 1608
R239	1-216-813-11	s	RESISTOR, CHIP 220 1/16W 1608
R240	1-216-845-11	s	RESISTOR,CHIP 100K 1/16W(1608)
R241	1-216-845-11	s	RESISTOR,CHIP 100K 1/16W(1608)
R242	1-216-845-11	s	RESISTOR,CHIP 100K 1/16W(1608)
R243	1-218-837-11	s	RESISTOR,CHIP 390 1/16W (1608)
R244	1-218-847-11	s	RESISTOR, CHIP 1K 1/16W (1608)
R245	1-218-823-11	s	RESISTOR,CHIP 100 1/16W (1608)
R246	1-218-823-11	s	RESISTOR,CHIP 100 1/16W (1608)
R247	1-216-805-11	s	RESISTOR,CHIP 47 1/16W 1608
R248	1-216-805-11	s	RESISTOR,CHIP 47 1/16W 1608
R249	1-216-805-11	s	RESISTOR,CHIP 47 1/16W 1608
R251	1-218-847-11	s	RESISTOR, CHIP 1K 1/16W (1608)
R252	1-218-871-11	s	RESISTOR,CHIP 10K 1/16W (1608)
R253	1-218-823-11	s	RESISTOR,CHIP 100 1/16W (1608)
R255	1-218-847-11	s	RESISTOR, CHIP 1K 1/16W (1608)
R256	1-218-830-11	s	RESISTOR,CHIP 200 1/16W (1608)
R301	1-218-859-11	s	RESISTOR,CHIP 3.3K 1/16W(1608)
R302	1-218-883-11	s	RESISTOR,CHIP 33K 1/16W (1608)
R303	1-218-879-11	s	RESISTOR,CHIP 22K 1/16W (1608)
R304	1-218-887-11	s	RESISTOR,CHIP 47K 1/16W (1608)
R305	1-218-885-11	s	RESISTOR,CHIP 39K 1/16W (1608)
R306	1-218-875-11	s	RESISTOR,CHIP 15K 1/16W (1608)
R308	1-218-887-11	s	RESISTOR,CHIP 47K 1/16W (1608)
R309	1-218-885-11	s	RESISTOR,CHIP 39K 1/16W (1608)
R310	1-218-875-11	s	RESISTOR,CHIP 15K 1/16W (1608)
R312	1-218-887-11	s	RESISTOR,CHIP 47K 1/16W (1608)
R313	1-218-885-11	s	RESISTOR,CHIP 39K 1/16W (1608)
R317	1-216-845-11	s	RESISTOR,CHIP 100K 1/16W(1608)
R318	1-216-845-11	s	RESISTOR,CHIP 100K 1/16W(1608)
R319	1-218-827-11	s	RESISTOR,CHIP 150 1/16W (1608)
R320	1-218-823-11	s	RESISTOR,CHIP 100 1/16W (1608)
R322	1-218-827-11	s	RESISTOR,CHIP 150 1/16W (1608)
R323	1-218-827-11	s	RESISTOR,CHIP 150 1/16W (1608)
R324	1-218-827-11	s	RESISTOR,CHIP 150 1/16W (1608)
R325	1-218-859-11	s	RESISTOR,CHIP 3.3K 1/16W(1608)
R326	1-218-859-11	s	RESISTOR,CHIP 3.3K 1/16W(1608)
R327	1-218-859-11	s	RESISTOR,CHIP 3.3K 1/16W(1608)
R328	1-211-977-11	s	RESISTOR,CHIP 22 1/16W (1608)

(DPR-141B BOARD)

Ref. No. or Q'ty	Part No.	SP	Description
R329	1-216-825-11	s	RESISTOR,CHIP 2.2K 1/16W 1608
R330	1-218-859-11	s	RESISTOR,CHIP 3.3K 1/16W(1608)
R331	1-218-847-11	s	RESISTOR, CHIP 1K 1/16W (1608)
R332	1-218-847-11	s	RESISTOR, CHIP 1K 1/16W (1608)
R333	1-211-977-11	s	RESISTOR,CHIP 22 1/16W (1608)
R334	1-211-977-11	s	RESISTOR,CHIP 22 1/16W (1608)
R335	1-218-863-11	s	RESISTOR,CHIP 4.7K 1/16W(1608)
R336	1-218-863-11	s	RESISTOR,CHIP 4.7K 1/16W(1608)
R337	1-218-847-11	s	RESISTOR, CHIP 1K 1/16W (1608)
R338	1-218-874-11	s	RESISTOR,CHIP 13K 1/16W (1608)
R339	1-218-839-11	s	RESISTOR,CHIP 470 1/16W (1608)
R342	1-218-863-11	s	RESISTOR,CHIP 4.7K 1/16W(1608)
R343	1-218-839-11	s	RESISTOR,CHIP 470 1/16W (1608)
R344	1-218-847-11	s	RESISTOR, CHIP 1K 1/16W (1608)
R345	1-211-977-11	s	RESISTOR,CHIP 22 1/16W (1608)
R346	1-218-863-11	s	RESISTOR,CHIP 4.7K 1/16W(1608)
R347	1-218-863-11	s	RESISTOR,CHIP 4.7K 1/16W(1608)
R348	1-211-977-11	s	RESISTOR,CHIP 22 1/16W (1608)
R349	1-216-857-11	s	RESISTOR,CHIP 1M 1/16W(1608)
R350	1-216-825-11	s	RESISTOR,CHIP 2.2K 1/16W 1608
R351	1-218-859-11	s	RESISTOR,CHIP 3.3K 1/16W(1608)
R352	1-218-847-11	s	RESISTOR, CHIP 1K 1/16W (1608)
R353	1-218-847-11	s	RESISTOR, CHIP 1K 1/16W (1608)
R354	1-211-977-11	s	RESISTOR,CHIP 22 1/16W (1608)
R355	1-211-977-11	s	RESISTOR,CHIP 22 1/16W (1608)
R356	1-218-863-11	s	RESISTOR,CHIP 4.7K 1/16W(1608)
R357	1-218-863-11	s	RESISTOR,CHIP 4.7K 1/16W(1608)
R358	1-218-847-11	s	RESISTOR, CHIP 1K 1/16W (1608)
R359	1-218-874-11	s	RESISTOR,CHIP 13K 1/16W (1608)
R360	1-218-839-11	s	RESISTOR,CHIP 470 1/16W (1608)
R363	1-218-863-11	s	RESISTOR,CHIP 4.7K 1/16W(1608)
R364	1-218-839-11	s	RESISTOR,CHIP 470 1/16W (1608)
R365	1-218-847-11	s	RESISTOR, CHIP 1K 1/16W (1608)
R366	1-211-977-11	s	RESISTOR,CHIP 22 1/16W (1608)
R367	1-218-863-11	s	RESISTOR,CHIP 4.7K 1/16W(1608)
R368	1-218-863-11	s	RESISTOR,CHIP 4.7K 1/16W(1608)
R369	1-211-977-11	s	RESISTOR,CHIP 22 1/16W (1608)
R370	1-216-825-11	s	RESISTOR,CHIP 2.2K 1/16W 1608
R371	1-218-859-11	s	RESISTOR,CHIP 3.3K 1/16W(1608)
R372	1-218-847-11	s	RESISTOR, CHIP 1K 1/16W (1608)
R373	1-218-847-11	s	RESISTOR, CHIP 1K 1/16W (1608)
R374	1-211-977-11	s	RESISTOR,CHIP 22 1/16W (1608)
R375	1-211-977-11	s	RESISTOR,CHIP 22 1/16W (1608)
R376	1-218-863-11	s	RESISTOR,CHIP 4.7K 1/16W(1608)
R377	1-218-863-11	s	RESISTOR,CHIP 4.7K 1/16W(1608)
R378	1-218-847-11	s	RESISTOR, CHIP 1K 1/16W (1608)
R379	1-218-874-11	s	RESISTOR,CHIP 13K 1/16W (1608)
R380	1-218-839-11	s	RESISTOR,CHIP 470 1/16W (1608)
R383	1-218-863-11	s	RESISTOR,CHIP 4.7K 1/16W(1608)
R384	1-218-839-11	s	RESISTOR,CHIP 470 1/16W (1608)
R385	1-218-847-11	s	RESISTOR, CHIP 1K 1/16W (1608)
R386	1-211-977-11	s	RESISTOR,CHIP 22 1/16W (1608)
R387	1-218-863-11	s	RESISTOR,CHIP 4.7K 1/16W(1608)
R388	1-218-863-11	s	RESISTOR,CHIP 4.7K 1/16W(1608)
R389	1-211-977-11	s	RESISTOR,CHIP 22 1/16W (1608)
R390	1-218-843-11	s	RESISTOR,CHIP 680 1/16W (1608)
R391	1-218-843-11	s	RESISTOR,CHIP 680 1/16W (1608)
R392	1-216-805-11	s	RESISTOR,CHIP 47 1/16W 1608
R393	1-216-805-11	s	RESISTOR,CHIP 47 1/16W 1608

(DPR-141B BOARD)

Ref. No. or Q'ty	Part No.	SP	Description
R394	1-218-847-11	s	RESISTOR, CHIP 1K 1/16W (1608)
R395	1-218-847-11	s	RESISTOR, CHIP 1K 1/16W (1608)
R396	1-218-847-11	s	RESISTOR, CHIP 1K 1/16W (1608)
R397	1-218-823-11	s	RESISTOR,CHIP 100 1/16W (1608)
R398	1-218-823-11	s	RESISTOR,CHIP 100 1/16W (1608)
R399	1-218-823-11	s	RESISTOR,CHIP 100 1/16W (1608)
R401	1-218-847-11	s	RESISTOR, CHIP 1K 1/16W (1608)
R402	1-218-847-11	s	RESISTOR, CHIP 1K 1/16W (1608)
R403	1-218-883-11	s	RESISTOR,CHIP 33K 1/16W (1608)
R404	1-218-871-11	s	RESISTOR,CHIP 10K 1/16W (1608)
R405	1-218-871-11	s	RESISTOR,CHIP 10K 1/16W (1608)
R406	1-218-871-11	s	RESISTOR,CHIP 10K 1/16W (1608)
R407	1-218-847-11	s	RESISTOR, CHIP 1K 1/16W (1608)
R408	1-218-823-11	s	RESISTOR,CHIP 100 1/16W (1608)
R409	1-218-823-11	s	RESISTOR,CHIP 100 1/16W (1608)
R410	1-218-823-11	s	RESISTOR,CHIP 100 1/16W (1608)
R411	1-216-857-11	s	RESISTOR,CHIP 1M 1/16W(1608)
R412	1-216-864-11	s	CONDUCTOR, CHIP (1608)
R413	1-216-845-11	s	RESISTOR,CHIP 100K 1/16W(1608)
R414	1-216-845-11	s	RESISTOR,CHIP 100K 1/16W(1608)
R415	1-216-797-11	s	RESISTOR,CHIP 10 1/16W 1608
R417	1-218-831-11	s	RESISTOR, CHIP 220 1/16W(1608)
R419	1-211-985-11	s	RESISTOR,CHIP 47 1/16W (1608)
R420	1-216-797-11	s	RESISTOR,CHIP 10 1/16W 1608
R424	1-216-864-11	s	CONDUCTOR, CHIP (1608)
R425	1-218-839-11	s	RESISTOR,CHIP 470 1/16W (1608)
R426	1-216-813-11	s	RESISTOR, CHIP 220 1/16W 1608
R427	1-218-837-11	s	RESISTOR,CHIP 390 1/16W (1608)
R430	1-218-869-11	s	RESISTOR,CHIP 8.2K 1/16W(1608)
R431	1-218-879-11	s	RESISTOR,CHIP 22K 1/16W (1608)
R432	1-218-857-11	s	RESISTOR,CHIP 2.7K 1/16W(1608)
R433	1-218-873-11	s	RESISTOR,CHIP 12K 1/16W (1608)
R434	1-218-847-11	s	RESISTOR, CHIP 1K 1/16W (1608)
R435	1-218-847-11	s	RESISTOR, CHIP 1K 1/16W (1608)
R436	1-218-863-11	s	RESISTOR,CHIP 4.7K 1/16W(1608)
R437	1-216-805-11	s	RESISTOR,CHIP 47 1/16W 1608
R438	1-216-864-11	s	CONDUCTOR, CHIP (1608)
R439	1-216-864-11	s	CONDUCTOR, CHIP (1608)
R441	1-216-864-11	s	CONDUCTOR, CHIP (1608)
R444	1-218-823-11	s	RESISTOR,CHIP 100 1/16W (1608)
R450	1-218-823-11	s	RESISTOR,CHIP 100 1/16W (1608)
R451	1-218-823-11	s	RESISTOR,CHIP 100 1/16W (1608)
R501	1-218-823-11	s	RESISTOR,CHIP 100 1/16W (1608)
R502	1-218-839-11	s	RESISTOR,CHIP 470 1/16W (1608)
R503	1-218-823-11	s	RESISTOR,CHIP 100 1/16W (1608)
R504	1-218-839-11	s	RESISTOR,CHIP 470 1/16W (1608)
R505	1-218-839-11	s	RESISTOR,CHIP 470 1/16W (1608)
R507	1-218-839-11	s	RESISTOR,CHIP 470 1/16W (1608)
R508	1-218-839-11	s	RESISTOR,CHIP 470 1/16W (1608)
R509	1-218-823-11	s	RESISTOR,CHIP 100 1/16W (1608)
R510	1-218-823-11	s	RESISTOR,CHIP 100 1/16W (1608)
R511	1-218-823-11	s	RESISTOR,CHIP 100 1/16W (1608)
R512	1-218-863-11	s	RESISTOR,CHIP 4.7K 1/16W(1608)
R513	1-218-863-11	s	RESISTOR,CHIP 4.7K 1/16W(1608)
R514	1-218-863-11	s	RESISTOR,CHIP 4.7K 1/16W(1608)
R515	1-218-823-11	s	RESISTOR,CHIP 100 1/16W (1608)
R516	1-216-849-11	s	RESISTOR,CHIP 220K 1/16W 1608
R517	1-216-845-11	s	RESISTOR,CHIP 100K 1/16W(1608)
R518	1-218-847-11	s	RESISTOR, CHIP 1K 1/16W (1608)

(DPR-141B BOARD)

Ref. No. or Q'ty	Part No.	SP	Description
R519	1-216-823-11	s	RESISTOR, CHIP 1.5K 1/16W
R520	1-216-823-11	s	RESISTOR, CHIP 1.5K 1/16W
R521	1-216-823-11	s	RESISTOR, CHIP 1.5K 1/16W
R522	1-216-825-11	s	RESISTOR,CHIP 2.2K 1/16W 1608
R523	1-216-825-11	s	RESISTOR,CHIP 2.2K 1/16W 1608
R524	1-218-871-11	s	RESISTOR,CHIP 10K 1/16W (1608)
R525	1-218-871-11	s	RESISTOR,CHIP 10K 1/16W (1608)
R526	1-216-823-11	s	RESISTOR, CHIP 1.5K 1/16W
R527	1-216-823-11	s	RESISTOR, CHIP 1.5K 1/16W
R528	1-218-847-11	s	RESISTOR, CHIP 1K 1/16W (1608)
R529	1-218-847-11	s	RESISTOR, CHIP 1K 1/16W (1608)
R532	1-218-847-11	s	RESISTOR, CHIP 1K 1/16W (1608)
R533	1-218-847-11	s	RESISTOR, CHIP 1K 1/16W (1608)
R534	1-216-825-11	s	RESISTOR,CHIP 2.2K 1/16W 1608
R535	1-216-825-11	s	RESISTOR,CHIP 2.2K 1/16W 1608
R536	1-218-847-11	s	RESISTOR, CHIP 1K 1/16W (1608)
R537	1-218-830-11	s	RESISTOR,CHIP 200 1/16W (1608)
R538	1-218-830-11	s	RESISTOR,CHIP 200 1/16W (1608)
R539	1-218-830-11	s	RESISTOR,CHIP 200 1/16W (1608)
R540	1-218-859-11	s	RESISTOR,CHIP 3.3K 1/16W(1608)
R541	1-218-859-11	s	RESISTOR,CHIP 3.3K 1/16W(1608)
R542	1-218-859-11	s	RESISTOR,CHIP 3.3K 1/16W(1608)
R543	1-218-823-11	s	RESISTOR,CHIP 100 1/16W (1608)
R544	1-218-871-11	s	RESISTOR,CHIP 10K 1/16W (1608)
R545	1-218-871-11	s	RESISTOR,CHIP 10K 1/16W (1608)
R548	1-216-849-11	s	RESISTOR,CHIP 220K 1/16W 1608
R551	1-216-845-11	s	RESISTOR,CHIP 100K 1/16W(1608)
R552	1-218-847-11	s	RESISTOR, CHIP 1K 1/16W (1608)
R553	1-216-825-11	s	RESISTOR,CHIP 2.2K 1/16W 1608
R559	1-218-871-11	s	RESISTOR,CHIP 10K 1/16W (1608)
R560	1-218-847-11	s	RESISTOR, CHIP 1K 1/16W (1608)
R561	1-218-823-11	s	RESISTOR,CHIP 100 1/16W (1608)
R563	1-218-823-11	s	RESISTOR,CHIP 100 1/16W (1608)
R564	1-218-823-11	s	RESISTOR,CHIP 100 1/16W (1608)
R565	1-218-823-11	s	RESISTOR,CHIP 100 1/16W (1608)
R568	1-218-823-11	s	RESISTOR,CHIP 100 1/16W (1608)
R569	1-218-847-11	s	RESISTOR, CHIP 1K 1/16W (1608)
R571	1-218-839-11	s	RESISTOR,CHIP 470 1/16W (1608)
R572	1-216-830-11	s	RESISTOR,CHIP 5.6K 1/16W 1608
R573	1-216-830-11	s	RESISTOR,CHIP 5.6K 1/16W 1608
R602	1-218-847-11	s	RESISTOR, CHIP 1K 1/16W (1608)
R616	1-216-849-11	s	RESISTOR,CHIP 220K 1/16W 1608
R651	1-218-847-11	s	RESISTOR, CHIP 1K 1/16W (1608)
R658	1-218-823-11	s	RESISTOR,CHIP 100 1/16W (1608)
R702	1-218-823-11	s	RESISTOR,CHIP 100 1/16W (1608)
R703	1-218-823-11	s	RESISTOR,CHIP 100 1/16W (1608)
R704	1-218-871-11	s	RESISTOR,CHIP 10K 1/16W (1608)
R705	1-218-871-11	s	RESISTOR,CHIP 10K 1/16W (1608)
R706	1-218-863-11	s	RESISTOR,CHIP 4.7K 1/16W(1608)
R707	1-218-835-11	s	RESISTOR,CHIP 330 1/16W (1608)
R708	1-216-805-11	s	RESISTOR,CHIP 47 1/16W 1608
R709	1-218-823-11	s	RESISTOR,CHIP 100 1/16W (1608)
R711	1-216-849-11	s	RESISTOR,CHIP 220K 1/16W 1608
R713	1-218-847-11	s	RESISTOR, CHIP 1K 1/16W (1608)
R715	1-216-805-11	s	RESISTOR,CHIP 47 1/16W 1608
R720	1-218-823-11	s	RESISTOR,CHIP 100 1/16W (1608)
R723	1-216-805-11	s	RESISTOR,CHIP 47 1/16W 1608
R724	1-216-805-11	s	RESISTOR,CHIP 47 1/16W 1608
R725	1-218-839-11	s	RESISTOR,CHIP 470 1/16W (1608)

(DPR-141B BOARD)

Ref. No. or Q'ty	Part No.	SP	Description
R726	1-218-823-11	s	RESISTOR,CHIP 100 1/16W (1608)
R727	1-218-847-11	s	RESISTOR, CHIP 1K 1/16W (1608)
R728	1-218-871-11	s	RESISTOR,CHIP 10K 1/16W (1608)
R729	1-218-863-11	s	RESISTOR,CHIP 4.7K 1/16W(1608)
R730	1-216-805-11	s	RESISTOR,CHIP 47 1/16W 1608
R731	1-218-871-11	s	RESISTOR,CHIP 10K 1/16W (1608)
R732	1-216-845-11	s	RESISTOR,CHIP 100K 1/16W(1608)
R733	1-216-845-11	s	RESISTOR,CHIP 100K 1/16W(1608)
R734	1-216-849-11	s	RESISTOR,CHIP 220K 1/16W 1608
R751	1-218-823-11	s	RESISTOR,CHIP 100 1/16W (1608)
R752	1-216-845-11	s	RESISTOR,CHIP 100K 1/16W(1608)
R753	1-216-849-11	s	RESISTOR,CHIP 220K 1/16W 1608
R754	1-218-847-11	s	RESISTOR, CHIP 1K 1/16W (1608)
R755	1-216-857-11	s	RESISTOR,CHIP 1M 1/16W(1608)
R758	1-218-871-11	s	RESISTOR,CHIP 10K 1/16W (1608)
R759	1-218-847-11	s	RESISTOR, CHIP 1K 1/16W (1608)
R760	1-216-849-11	s	RESISTOR,CHIP 220K 1/16W 1608
R761	1-218-823-11	s	RESISTOR,CHIP 100 1/16W (1608)
R763	1-218-823-11	s	RESISTOR,CHIP 100 1/16W (1608)
R764	1-218-847-11	s	RESISTOR, CHIP 1K 1/16W (1608)
R765	1-218-847-11	s	RESISTOR, CHIP 1K 1/16W (1608)
R766	1-216-849-11	s	RESISTOR,CHIP 220K 1/16W 1608
R767	1-218-847-11	s	RESISTOR, CHIP 1K 1/16W (1608)
R771	1-218-823-11	s	RESISTOR,CHIP 100 1/16W (1608)
R772	1-218-823-11	s	RESISTOR,CHIP 100 1/16W (1608)
R776	1-216-849-11	s	RESISTOR,CHIP 220K 1/16W 1608
R777	1-216-849-11	s	RESISTOR,CHIP 220K 1/16W 1608
R778	1-216-849-11	s	RESISTOR,CHIP 220K 1/16W 1608
R779	1-218-847-11	s	RESISTOR, CHIP 1K 1/16W (1608)
R801	1-218-887-11	s	RESISTOR,CHIP 47K 1/16W (1608)
R802	1-218-847-11	s	RESISTOR, CHIP 1K 1/16W (1608)
R803	1-218-887-11	s	RESISTOR,CHIP 47K 1/16W (1608)
R804	1-218-847-11	s	RESISTOR, CHIP 1K 1/16W (1608)
R806	1-218-847-11	s	RESISTOR, CHIP 1K 1/16W (1608)
R808	1-218-847-11	s	RESISTOR, CHIP 1K 1/16W (1608)
R812	1-216-845-11	s	RESISTOR,CHIP 100K 1/16W(1608)
R813	1-218-887-11	s	RESISTOR,CHIP 47K 1/16W (1608)
R814	1-218-847-11	s	RESISTOR, CHIP 1K 1/16W (1608)
R815	1-216-849-11	s	RESISTOR,CHIP 220K 1/16W 1608
R816	1-216-849-11	s	RESISTOR,CHIP 220K 1/16W 1608
R817	1-218-887-11	s	RESISTOR,CHIP 47K 1/16W (1608)
R818	1-218-887-11	s	RESISTOR,CHIP 47K 1/16W (1608)
R819	1-218-887-11	s	RESISTOR,CHIP 47K 1/16W (1608)
R820	1-218-847-11	s	RESISTOR, CHIP 1K 1/16W (1608)
R821	1-218-887-11	s	RESISTOR,CHIP 47K 1/16W (1608)
R822	1-218-887-11	s	RESISTOR,CHIP 47K 1/16W (1608)
R823	1-218-887-11	s	RESISTOR,CHIP 47K 1/16W (1608)
R824	1-218-887-11	s	RESISTOR,CHIP 47K 1/16W (1608)
R825	1-218-879-11	s	RESISTOR,CHIP 22K 1/16W (1608)
R826	1-218-847-11	s	RESISTOR, CHIP 1K 1/16W (1608)
R827	1-218-883-11	s	RESISTOR,CHIP 33K 1/16W (1608)
R828	1-218-887-11	s	RESISTOR,CHIP 47K 1/16W (1608)
R829	1-216-849-11	s	RESISTOR,CHIP 220K 1/16W 1608
R830	1-218-847-11	s	RESISTOR, CHIP 1K 1/16W (1608)
R901	1-218-871-11	s	RESISTOR,CHIP 10K 1/16W (1608)
R902	1-218-871-11	s	RESISTOR,CHIP 10K 1/16W (1608)
R904	1-218-847-11	s	RESISTOR, CHIP 1K 1/16W (1608)
R906	1-218-847-11	s	RESISTOR, CHIP 1K 1/16W (1608)
R913	1-216-849-11	s	RESISTOR,CHIP 220K 1/16W 1608

(DPR-141B BOARD)

Ref. No. or Q'ty	Part No.	SP	Description
R914	1-218-847-11	s	RESISTOR, CHIP 1K 1/16W (1608)
R916	1-218-871-11	s	RESISTOR,CHIP 10K 1/16W (1608)
R917	1-218-871-11	s	RESISTOR,CHIP 10K 1/16W (1608)
R918	1-218-871-11	s	RESISTOR,CHIP 10K 1/16W (1608)
R919	1-218-871-11	s	RESISTOR,CHIP 10K 1/16W (1608)
R920	1-218-871-11	s	RESISTOR,CHIP 10K 1/16W (1608)
R921	1-218-871-11	s	RESISTOR,CHIP 10K 1/16W (1608)
R922	1-218-871-11	s	RESISTOR,CHIP 10K 1/16W (1608)
R923	1-218-871-11	s	RESISTOR,CHIP 10K 1/16W (1608)
R924	1-218-880-11	s	RESISTOR,CHIP 24K 1/16W (1608)
R925	1-218-880-11	s	RESISTOR,CHIP 24K 1/16W (1608)
R926	1-218-880-11	s	RESISTOR,CHIP 24K 1/16W (1608)
R927	1-218-880-11	s	RESISTOR,CHIP 24K 1/16W (1608)
R928	1-218-857-11	s	RESISTOR,CHIP 2.7K 1/16W(1608)
R929	1-218-857-11	s	RESISTOR,CHIP 2.7K 1/16W(1608)
R930	1-218-857-11	s	RESISTOR,CHIP 2.7K 1/16W(1608)
R931	1-218-857-11	s	RESISTOR,CHIP 2.7K 1/16W(1608)
R932	1-218-857-11	s	RESISTOR,CHIP 2.7K 1/16W(1608)
R933	1-218-857-11	s	RESISTOR,CHIP 2.7K 1/16W(1608)
R934	1-218-860-11	s	RESISTOR,CHIP 3.6K 1/16W(1608)
R935	1-218-860-11	s	RESISTOR,CHIP 3.6K 1/16W(1608)
R936	1-218-859-11	s	RESISTOR,CHIP 3.3K 1/16W(1608)
R937	1-218-859-11	s	RESISTOR,CHIP 3.3K 1/16W(1608)
R939	1-218-871-11	s	RESISTOR,CHIP 10K 1/16W (1608)
R940	1-218-871-11	s	RESISTOR,CHIP 10K 1/16W (1608)
R941	1-218-871-11	s	RESISTOR,CHIP 10K 1/16W (1608)
R942	1-218-823-11	s	RESISTOR,CHIP 100 1/16W (1608)
R943	1-218-823-11	s	RESISTOR,CHIP 100 1/16W (1608)
R944	1-216-845-11	s	RESISTOR,CHIP 100K 1/16W(1608)
R945	1-216-845-11	s	RESISTOR,CHIP 100K 1/16W(1608)
R946	1-216-849-11	s	RESISTOR,CHIP 220K 1/16W 1608
R947	1-218-847-11	s	RESISTOR, CHIP 1K 1/16W (1608)
R958	1-218-871-11	s	RESISTOR,CHIP 10K 1/16W (1608)
R959	1-218-878-11	s	RESISTOR,CHIP 20K 1/16W (1608)
R960	1-218-887-11	s	RESISTOR,CHIP 47K 1/16W (1608)
R963	1-218-871-11	s	RESISTOR,CHIP 10K 1/16W (1608)
R964	1-218-878-11	s	RESISTOR,CHIP 20K 1/16W (1608)
R965	1-218-887-11	s	RESISTOR,CHIP 47K 1/16W (1608)
R967	1-218-871-11	s	RESISTOR,CHIP 10K 1/16W (1608)
R968	1-218-887-11	s	RESISTOR,CHIP 47K 1/16W (1608)
R970	1-218-887-11	s	RESISTOR,CHIP 47K 1/16W (1608)
R971	1-218-823-11	s	RESISTOR,CHIP 100 1/16W (1608)
R976	1-218-868-11	s	RESISTOR,CHIP 7.5K 1/16W(1608)
R977	1-218-875-11	s	RESISTOR,CHIP 15K 1/16W (1608)
R978	1-218-877-11	s	RESISTOR,CHIP 18K 1/16W (1608)
R980	1-218-868-11	s	RESISTOR,CHIP 7.5K 1/16W(1608)
R981	1-218-875-11	s	RESISTOR,CHIP 15K 1/16W (1608)
R982	1-218-877-11	s	RESISTOR,CHIP 18K 1/16W (1608)
R988	1-218-871-11	s	RESISTOR,CHIP 10K 1/16W (1608)
R989	1-218-871-11	s	RESISTOR,CHIP 10K 1/16W (1608)
R990	1-218-871-11	s	RESISTOR,CHIP 10K 1/16W (1608)
R991	1-218-871-11	s	RESISTOR,CHIP 10K 1/16W (1608)
R992	1-218-871-11	s	RESISTOR,CHIP 10K 1/16W (1608)
R993	1-218-871-11	s	RESISTOR,CHIP 10K 1/16W (1608)
R994	1-218-882-11	s	RESISTOR, CHIP 30K 1/16W(1608)
R995	1-218-882-11	s	RESISTOR, CHIP 30K 1/16W(1608)
R996	1-218-887-11	s	RESISTOR,CHIP 47K 1/16W (1608)
R997	1-218-887-11	s	RESISTOR,CHIP 47K 1/16W (1608)
R998	1-218-887-11	s	RESISTOR,CHIP 47K 1/16W (1608)

(DPR-141B BOARD)

Ref. No. or Q'ty	Part No.	SP	Description
R999	1-218-887-11	s	RESISTOR,CHIP 47K 1/16W (1608)
R1000	1-218-887-11	s	RESISTOR,CHIP 47K 1/16W (1608)
R1001	1-218-887-11	s	RESISTOR,CHIP 47K 1/16W (1608)
R1002	1-218-823-11	s	RESISTOR,CHIP 100 1/16W (1608)
R1003	1-218-823-11	s	RESISTOR,CHIP 100 1/16W (1608)
R1004	1-218-823-11	s	RESISTOR,CHIP 100 1/16W (1608)
R1005	1-218-823-11	s	RESISTOR,CHIP 100 1/16W (1608)
R1006	1-216-797-11	s	RESISTOR,CHIP 10 1/16W 1608
R1007	1-218-837-11	s	RESISTOR,CHIP 390 1/16W (1608)
R1008	1-218-841-11	s	RESISTOR,CHIP 560 1/16W (1608)
R1009	1-218-852-11	s	RESISTOR,CHIP 1.6K 1/16W(1608)
R1010	1-218-837-11	s	RESISTOR,CHIP 390 1/16W (1608)
R1011	1-218-841-11	s	RESISTOR,CHIP 560 1/16W (1608)
R1012	1-218-852-11	s	RESISTOR,CHIP 1.6K 1/16W(1608)
R1015	1-218-887-11	s	RESISTOR,CHIP 47K 1/16W (1608)
R1016	1-218-887-11	s	RESISTOR,CHIP 47K 1/16W (1608)
R1019	1-218-887-11	s	RESISTOR,CHIP 47K 1/16W (1608)
R1020	1-218-887-11	s	RESISTOR,CHIP 47K 1/16W (1608)
RB101	1-239-409-11	s	RESISTOR NETWORK 47 (1608)
RB102	1-239-409-11	s	RESISTOR NETWORK 47 (1608)
RB103	1-239-409-11	s	RESISTOR NETWORK 47 (1608)
RB104	1-239-409-11	s	RESISTOR NETWORK 47 (1608)
RB105	1-239-409-11	s	RESISTOR NETWORK 47 (1608)
RB106	1-239-409-11	s	RESISTOR NETWORK 47 (1608)
RB107	1-239-409-11	s	RESISTOR NETWORK 47 (1608)
RB108	1-239-409-11	s	RESISTOR NETWORK 47 (1608)
RB109	1-239-409-11	s	RESISTOR NETWORK 47 (1608)
RB201	1-239-409-11	s	RESISTOR NETWORK 47 (1608)
RB202	1-236-904-11	s	RESISTOR NETWORK 1K (1608)
RB203	1-236-904-11	s	RESISTOR NETWORK 1K (1608)
RB204	1-236-908-11	s	RESISTOR,NETWORK 10K (3216)
RB205	1-236-908-11	s	RESISTOR,NETWORK 10K (3216)
RB206	1-236-908-11	s	RESISTOR,NETWORK 10K (3216)
RB207	1-236-908-11	s	RESISTOR,NETWORK 10K (3216)
RB208	1-236-908-11	s	RESISTOR,NETWORK 10K (3216)
RB209	1-236-907-11	s	RESISTOR BLOCK 100K (1608)
RB210	1-236-908-11	s	RESISTOR,NETWORK 10K (3216)
RB211	1-236-908-11	s	RESISTOR,NETWORK 10K (3216)
RB212	1-236-907-11	s	RESISTOR BLOCK 100K (1608)
RB213	1-236-908-11	s	RESISTOR,NETWORK 10K (3216)
RB214	1-239-409-11	s	RESISTOR NETWORK 47 (1608)
RB215	1-239-409-11	s	RESISTOR NETWORK 47 (1608)
RB216	1-239-409-11	s	RESISTOR NETWORK 47 (1608)
RB217	1-239-409-11	s	RESISTOR NETWORK 47 (1608)
RB218	1-239-409-11	s	RESISTOR NETWORK 47 (1608)
RB219	1-239-409-11	s	RESISTOR NETWORK 47 (1608)
RB220	1-239-409-11	s	RESISTOR NETWORK 47 (1608)
RB221	1-236-908-11	s	RESISTOR,NETWORK 10K (3216)
RB222	1-236-908-11	s	RESISTOR,NETWORK 10K (3216)
RB223	1-239-409-11	s	RESISTOR NETWORK 47 (1608)
RB224	1-236-907-11	s	RESISTOR BLOCK 100K (1608)
RB225	1-236-907-11	s	RESISTOR BLOCK 100K (1608)
RB226	1-236-907-11	s	RESISTOR BLOCK 100K (1608)
RB227	1-236-907-11	s	RESISTOR BLOCK 100K (1608)
RB228	1-236-907-11	s	RESISTOR BLOCK 100K (1608)
RB229	1-236-907-11	s	RESISTOR BLOCK 100K (1608)
RB230	1-236-907-11	s	RESISTOR BLOCK 100K (1608)
RB231	1-236-907-11	s	RESISTOR BLOCK 100K (1608)

(DPR-141B BOARD)

Ref. No. or Q'ty	Part No.	SP	Description
RB301	1-236-904-11	s	RESISTOR NETWORK 1K (1608)
RB302	1-236-907-11	s	RESISTOR BLOCK 100K (1608)
RB303	1-239-309-11	s	RESISTOR ARRAY,CHIP 100K
RB304	1-239-419-11	s	NETWORK RESISTOR 470 (1608)
RB305	1-239-419-11	s	NETWORK RESISTOR 470 (1608)
RB306	1-239-711-11	s	NETWORK, RESISTOR 0 (1608)
RB307	1-239-711-11	s	NETWORK, RESISTOR 0 (1608)
RB501	1-236-904-11	s	RESISTOR NETWORK 1K (1608)
RB503	1-239-444-11	s	NETWORK,RESISTOR 220K (1608)
RB504	1-239-444-11	s	NETWORK,RESISTOR 220K (1608)
RB505	1-239-412-11	s	NETWORK, RESISTOR 100 (1608)
RB506	1-239-412-11	s	NETWORK, RESISTOR 100 (1608)
RB507	1-239-412-11	s	NETWORK, RESISTOR 100 (1608)
RB508	1-239-412-11	s	NETWORK, RESISTOR 100 (1608)
RB509	1-239-444-11	s	NETWORK,RESISTOR 220K (1608)
RB510	1-239-412-11	s	NETWORK, RESISTOR 100 (1608)
RB511	1-239-412-11	s	NETWORK, RESISTOR 100 (1608)
RB512	1-239-412-11	s	NETWORK, RESISTOR 100 (1608)
RB513	1-239-412-11	s	NETWORK, RESISTOR 100 (1608)
RB514	1-239-412-11	s	NETWORK, RESISTOR 100 (1608)
RB515	1-239-412-11	s	NETWORK, RESISTOR 100 (1608)
RB516	1-239-409-11	s	RESISTOR NETWORK 47 (1608)
RB517	1-239-409-11	s	RESISTOR NETWORK 47 (1608)
RB518	1-239-409-11	s	RESISTOR NETWORK 47 (1608)
RB519	1-239-409-11	s	RESISTOR NETWORK 47 (1608)
RB520	1-239-409-11	s	RESISTOR NETWORK 47 (1608)
RB521	1-239-409-11	s	RESISTOR NETWORK 47 (1608)
RB522	1-239-409-11	s	RESISTOR NETWORK 47 (1608)
RB611	1-236-904-11	s	RESISTOR NETWORK 1K (1608)
RB711	1-236-904-11	s	RESISTOR NETWORK 1K (1608)
RB712	1-236-904-11	s	RESISTOR NETWORK 1K (1608)
RB713	1-239-444-11	s	NETWORK,RESISTOR 220K (1608)
RB753	1-239-444-11	s	NETWORK,RESISTOR 220K (1608)
RB755	1-239-412-11	s	NETWORK, RESISTOR 100 (1608)
RB756	1-239-444-11	s	NETWORK,RESISTOR 220K (1608)
RB771	1-236-904-11	s	RESISTOR NETWORK 1K (1608)
RB772	1-236-904-11	s	RESISTOR NETWORK 1K (1608)
RB774	1-236-904-11	s	RESISTOR NETWORK 1K (1608)
RB775	1-236-904-11	s	RESISTOR NETWORK 1K (1608)
RB802	1-236-904-11	s	RESISTOR NETWORK 1K (1608)
TP201	1-535-757-11	s	CHIP, CHECKER (CONNECTOR)
TP501	1-535-757-11	s	CHIP, CHECKER (CONNECTOR)
TP502	1-535-757-11	s	CHIP, CHECKER (CONNECTOR)
TP503	1-535-757-11	s	CHIP, CHECKER (CONNECTOR)
TP712	1-535-757-11	s	CHIP, CHECKER (CONNECTOR)
X401	1-767-695-21	s	OSCILLATOR, CRYSTAL
X711	1-760-654-21	s	VIBRATOR, CRYSTAL
X751	1-760-655-21	s	VIBRATOR, CRYSTAL

DV-21C/21 BOARD

Ref. No. or Q'ty	Part No.	SP	Description
1pc	A-8322-186-A	o	MOUNTED CIRCUIT BOARD, DV-21 [for DSR-500WS/500WSP]
	A-8344-126-A	o	MOUNTED CIRCUIT BOARD, DV-21C [for DSR-570WS/570WSP]
C106	1-162-915-11	s	CERAMIC, CHIP 10PF 50V
C107	1-162-915-11	s	CERAMIC, CHIP 10PF 50V
C108	1-164-156-11	s	CERAMIC, CHIP 0.1uF 25V
C109	1-110-569-11	s	TANTALUM, CHIP 47uF 20% 6.3V
C110	1-164-156-11	s	CERAMIC, CHIP 0.1uF 25V
C111	1-135-177-21	s	TANTALUM, CHIP 1uF 10% 25V
C112	1-164-156-11	s	CERAMIC, CHIP 0.1uF 25V
C113	1-164-230-11	s	CERAMIC 220PF 5% 50V
C114	1-164-156-11	s	CERAMIC, CHIP 0.1uF 25V
C115	1-110-569-11	s	TANTALUM, CHIP 47uF 20% 6.3V
C116	1-164-156-11	s	CERAMIC, CHIP 0.1uF 25V
C117	1-164-156-11	s	CERAMIC, CHIP 0.1uF 25V
C118	1-164-156-11	s	CERAMIC, CHIP 0.1uF 25V
C119	1-110-569-11	s	TANTALUM, CHIP 47uF 20% 6.3V
C120	1-164-156-11	s	CERAMIC, CHIP 0.1uF 25V
C121	1-164-156-11	s	CERAMIC, CHIP 0.1uF 25V
C122	1-162-919-11	s	CERAMIC, CHIP 22PF 5% 50V
C123	1-162-919-11	s	CERAMIC, CHIP 22PF 5% 50V
C124	1-164-156-11	s	CERAMIC, CHIP 0.1uF 25V
C125	1-104-852-11	s	TANTALUM, CHIP 22uF 20% 10V
C126	1-164-156-11	s	CERAMIC, CHIP 0.1uF 25V
C127	1-164-346-11	s	CERAMIC 1uF 16V
C128	1-164-230-11	s	CERAMIC 220PF 5% 50V
C129	1-164-156-11	s	CERAMIC, CHIP 0.1uF 25V
CN101	1-764-095-11	o	PIN, CONNECTOR (PC BOARD) 10P
CN102	1-580-789-21	o	PIN, CONNECTOR (SMD) 6P
CN103	1-785-846-91	o	CONNECTOR, BOARD TO BOARD 40P
D101	8-719-938-72	s	DIODE SB01-05CP
D102	8-719-941-86	s	DIODE DAN202U
IC101	8-759-430-56	s	IC CXD2194AR
IC102	8-759-432-00	s	IC TSB11LV01PT-TEB
IC104	8-759-524-27	s	IC TC74VHC244FT(EL)
IC105	8-759-524-04	s	IC TC74VHC125FT(EL)
IC106	8-759-196-96	s	IC TC7SH08FU-TE85R
IC107	8-759-445-93	s	IC AK6440AM-E2
L106	1-414-398-11	s	INDUCTOR 10uH
L107	1-414-398-11	s	INDUCTOR 10uH
L108	1-414-398-11	s	INDUCTOR 10uH
L109	1-414-392-21	s	INDUCTOR 1uH
R101	1-216-864-11	s	METAL, CHIP 0 5% 1/16W
R102	1-216-864-11	s	METAL, CHIP 0 5% 1/16W
R103	1-216-864-11	s	METAL, CHIP 0 5% 1/16W
R104	1-216-864-11	s	METAL, CHIP 0 5% 1/16W
R105	1-216-849-11	s	METAL, CHIP 220K 5% 1/16W
R106	1-216-849-11	s	METAL, CHIP 220K 5% 1/16W
R107	1-216-839-11	s	METAL, CHIP 33K 5% 1/16W
R108	1-216-839-11	s	METAL, CHIP 33K 5% 1/16W
R109	1-218-840-11	s	METAL, CHIP 510 0.50% 1/16W
R110	1-216-849-11	s	METAL, CHIP 220K 5% 1/16W
R111	1-216-849-11	s	METAL, CHIP 220K 5% 1/16W
R112	1-216-849-11	s	METAL, CHIP 220K 5% 1/16W
R113	1-216-864-11	s	METAL, CHIP 0 5% 1/16W
R114	1-216-864-11	s	METAL, CHIP 0 5% 1/16W
R115	1-216-849-11	s	METAL, CHIP 220K 5% 1/16W

(DV-21C/21A BOARD)

Ref. No. or Q'ty	Part No.	SP	Description
R116	1-216-849-11	s	METAL, CHIP 220K 5% 1/16W
R117	1-216-839-11	s	METAL, CHIP 33K 5% 1/16W
R118	1-216-839-11	s	METAL, CHIP 33K 5% 1/16W
R119	1-216-839-11	s	METAL, CHIP 33K 5% 1/16W
R120	1-216-849-11	s	METAL, CHIP 220K 5% 1/16W
R121	1-216-809-11	s	METAL, CHIP 100 5% 1/16W
R122	1-216-809-11	s	METAL, CHIP 100 5% 1/16W
R123	1-216-849-11	s	METAL, CHIP 220K 5% 1/16W
R124	1-216-834-11	s	METAL, CHIP 12K 5% 1/16W
R125	1-216-834-11	s	METAL, CHIP 12K 5% 1/16W
R126	1-216-834-11	s	METAL, CHIP 12K 5% 1/16W
R127	1-216-821-11	s	METAL, CHIP 1K 5% 1/16W
R128	1-216-821-11	s	METAL, CHIP 1K 5% 1/16W
R129	1-216-821-11	s	METAL, CHIP 1K 5% 1/16W
R130	1-216-849-11	s	METAL, CHIP 220K 5% 1/16W
R131	1-216-849-11	s	METAL, CHIP 220K 5% 1/16W
R132	1-216-809-11	s	METAL, CHIP 100 5% 1/16W
R133	1-216-809-11	s	METAL, CHIP 100 5% 1/16W
R134	1-216-821-11	s	METAL, CHIP 1K 5% 1/16W
R135	1-216-845-11	s	METAL, CHIP 100K 5% 1/16W
R136	1-216-864-11	s	METAL, CHIP 0 5% 1/16W
R137	1-216-845-11	s	METAL, CHIP 100K 5% 1/16W
R138	1-216-845-11	s	METAL, CHIP 100K 5% 1/16W
R139	1-216-833-91	s	METAL, CHIP 10K 5% 1/16W
R140	1-216-833-91	s	METAL, CHIP 10K 5% 1/16W
R141	1-216-833-91	s	METAL, CHIP 10K 5% 1/16W
R142	1-216-845-11	s	METAL, CHIP 100K 5% 1/16W
R143	1-216-845-11	s	METAL, CHIP 100K 5% 1/16W
R144	1-216-857-11	s	METAL, CHIP 1M 5% 1/16W
R145	1-218-873-11	s	METAL, CHIP 12K 0.50% 1/16W
R146	1-218-873-11	s	METAL, CHIP 12K 0.50% 1/16W
R147	1-211-987-11	s	METAL, CHIP 56 0.50% 1/16W
R148	1-211-987-11	s	METAL, CHIP 56 0.50% 1/16W
R149	1-216-833-91	s	METAL, CHIP 10K 5% 1/16W
R150	1-216-833-91	s	METAL, CHIP 10K 5% 1/16W
R151	1-211-987-11	s	METAL, CHIP 56 0.50% 1/16W
R152	1-211-987-11	s	METAL, CHIP 56 0.50% 1/16W
RB101	1-239-310-11	s	RESISTOR ARRAY, CHIP 220K
X101	1-760-735-11	s	VIBRATOR, CRYSTAL
X102	1-579-922-11	s	VIBRATOR, CRYSTAL (CHIP TYPE)

DU-36 BOARD

Ref. No. or Q'ty	Part No.	SP	Description
1pc	1-673-954-11	o	PRINTED CIRCUIT BOARD, DU-36
C1	1-128-339-11	s	ELECT 2200uF 20% 10V
C2	1-128-339-11	s	ELECT 2200uF 20% 10V
C3	1-128-339-11	s	ELECT 2200uF 20% 10V
CN1	1-566-757-11	s	PIN, CONNECTOR (PC BOARD) 2P

ES-26/26P BOARD

Ref. No. or Q'ty	Part No.	SP	Description
*1-*9:For DSR-500WS/500WSP			
*1:Serial No. 10001-10020(UC), 30001-30010(J), 40001-40020(CE)			
*2:Serial No. 10001-12000(UC), 30001-32000(J), 40001-40685(CE)			
*3:Serial No. 12001-(UC), 32001-(J), 40686-(CE)			
*4:Serial No. 10001-12000(UC), 30001-32000(J), 40001-40850(CE)			
*5:Serial No. 12001-(UC), 32001-(J), 40851-(CE)			
*6:Serial No. 10001-12000(UC), 30001-32000(J), 40001-42000(CE)			
*7:Serial No. 12001-(UC), 32001-(J), 42001-(CE)			
*8:Serial No. 10001-12585(UC), 30001-32205(J), 40001-43405(CE)			
*9:Serial No. 12586-(UC), 32206-(J), 43406-(CE)			
1pc	A-8322-148-B	o	MOUNTED CIRCUIT BOARD, ES-26 [for DSR-570WS/500WS]
	A-8322-194-B	o	MOUNTED CIRCUIT BOARD, ES-26(P) [for DSR-570WSP/500WSP]
1pc	3-614-239-01	o	PUSH RIVETS(D=2.1)
2pcs *4	3-603-737-01	o	LEVER,BOARD
2pcs	7-628-253-20	s	SCREW +PS 2X6
2pcs	7-622-205-05	s	NUT M2 TYPE2
C101	1-164-156-11	s	CERAMIC, CHIP 0.1uF 25V
C102	1-164-156-11	s	CERAMIC, CHIP 0.1uF 25V
C103	1-164-156-11	s	CERAMIC, CHIP 0.1uF 25V
C104	1-164-156-11	s	CERAMIC, CHIP 0.1uF 25V
C105	1-164-156-11	s	CERAMIC, CHIP 0.1uF 25V
C106	1-104-851-11	s	TANTALUM, CHIP 10uF 20% 10V
C107	1-104-823-11	s	TANTALUM, CHIP 47uF 20% 16V
C108	1-164-156-11	s	CERAMIC, CHIP 0.1uF 25V
C109	1-164-156-11	s	CERAMIC, CHIP 0.1uF 25V
C110	1-104-851-11	s	TANTALUM, CHIP 10uF 20% 10V
C111	1-104-851-11	s	TANTALUM, CHIP 10uF 20% 10V
C112	1-113-682-11	s	TANTALUM, CHIP 33uF 20% 10V
C113	1-113-682-11	s	TANTALUM, CHIP 33uF 20% 10V
C114	1-164-156-11	s	CERAMIC, CHIP 0.1uF 25V
C115	1-113-682-11	s	TANTALUM, CHIP 33uF 20% 10V
C116	1-113-682-11	s	TANTALUM, CHIP 33uF 20% 10V
C117	1-164-156-11	s	CERAMIC, CHIP 0.1uF 25V
C118	1-164-156-11	s	CERAMIC, CHIP 0.1uF 25V
C119	1-164-156-11	s	CERAMIC, CHIP 0.1uF 25V
C120	1-164-156-11	s	CERAMIC, CHIP 0.1uF 25V
C121	1-104-851-11	s	TANTALUM, CHIP 10uF 20% 10V
C122	1-104-851-11	s	TANTALUM, CHIP 10uF 20% 10V
C123	1-104-851-11	s	TANTALUM, CHIP 10uF 20% 10V
C124	1-164-156-11	s	CERAMIC, CHIP 0.1uF 25V
C125	1-164-156-11	s	CERAMIC, CHIP 0.1uF 25V
C126	1-164-156-11	s	CERAMIC, CHIP 0.1uF 25V
C127	1-137-910-11	s	CAPACITOR, TANTALUM ELECT 10MF
C128	1-137-910-11	s	CAPACITOR, TANTALUM ELECT 10MF
C129	1-104-608-11	s	ELECT, CHIP 33uF 20% 6.3V\
C130	1-162-927-11	s	CERAMIC, CHIP 100PF 5% 50V
C131	1-164-156-11	s	CERAMIC, CHIP 0.1uF 25V
C132	1-113-682-11	s	TANTALUM, CHIP 33uF 20% 10V
C133	1-113-682-11	s	TANTALUM, CHIP 33uF 20% 10V
C134	1-164-156-11	s	CERAMIC, CHIP 0.1uF 25V
C135	1-164-156-11	s	CERAMIC, CHIP 0.1uF 25V
C136	1-164-156-11	s	CERAMIC, CHIP 0.1uF 25V
C137	1-164-156-11	s	CERAMIC, CHIP 0.1uF 25V
C138	1-164-156-11	s	CERAMIC, CHIP 0.1uF 25V
C139	1-162-921-11	s	CERAMIC, CHIP 33PF 5% 50V
C140	1-162-921-11	s	CERAMIC, CHIP 33PF 5% 50V
C141	1-162-921-11	s	CERAMIC, CHIP 33PF 5% 50V
C143	1-135-145-11	s	TANTALUM, CHIP 0.47uF 10% 35V
C144	1-104-851-11	s	TANTALUM, CHIP 10uF 20% 10V

(ES-26/26P BOARD)

Ref. No. or Q'ty	Part No.	SP	Description
C145	1-126-393-11	s	ELECT, CHIP 33uF 20% 10V
C146	1-164-156-11	s	CERAMIC, CHIP 0.1uF 25V
C147	1-164-156-11	s	CERAMIC, CHIP 0.1uF 25V
C148	1-126-391-11	s	ELECT 47uF 20% 6.3V
C149	1-104-913-11	s	TANTALUM, CHIP 10uF 20% 16V [for DSR-570WSP/500WSP]
C150	1-164-156-11	s	CERAMIC, CHIP 0.1uF 25V
C151	1-162-970-11	s	CERAMIC, CHIP 0.01uF 10% 25V
C152	1-162-970-11	s	CERAMIC, CHIP 0.01uF 10% 25V
C153	1-126-393-11	s	ELECT, CHIP 33uF 20% 10V
C155	1-104-913-11	s	TANTALUM, CHIP 10uF 20% 16V
C156	1-162-909-11	s	CERAMIC, CHIP 4PF 0.25PF 50V
C157	1-104-851-11	s	TANTALUM, CHIP 10uF 20% 10V
C158	1-164-156-11	s	CERAMIC, CHIP 0.1uF 25V
C159	1-164-156-11	s	CERAMIC, CHIP 0.1uF 25V
C160	1-137-910-11	s	CAPACITOR, TANTALUM ELECT 10MF
C161	1-137-910-11	s	CAPACITOR, TANTALUM ELECT 10MF
C162	1-104-608-11	s	ELECT, CHIP 33uF 20% 6.3V\
C163	1-162-927-11	s	CERAMIC, CHIP 100PF 5% 50V
C164	1-164-156-11	s	CERAMIC, CHIP 0.1uF 25V
C165	1-113-682-11	s	TANTALUM, CHIP 33uF 20% 10V
C166	1-113-682-11	s	TANTALUM, CHIP 33uF 20% 10V
C167	1-164-156-11	s	CERAMIC, CHIP 0.1uF 25V
C168	1-164-156-11	s	CERAMIC, CHIP 0.1uF 25V
C169	1-164-156-11	s	CERAMIC, CHIP 0.1uF 25V
C170	1-164-156-11	s	CERAMIC, CHIP 0.1uF 25V
C171	1-164-156-11	s	CERAMIC, CHIP 0.1uF 25V
C172	1-162-921-11	s	CERAMIC, CHIP 33PF 5% 50V
C173	1-162-921-11	s	CERAMIC, CHIP 33PF 5% 50V
C174	1-162-921-11	s	CERAMIC, CHIP 33PF 5% 50V
C176	1-135-145-11	s	TANTALUM, CHIP 0.47uF 10% 35V
C177	1-104-851-11	s	TANTALUM, CHIP 10uF 20% 10V
C178	1-164-156-11	s	CERAMIC, CHIP 0.1uF 25V
C179	1-164-156-11	s	CERAMIC, CHIP 0.1uF 25V
C180	1-162-927-11	s	CERAMIC, CHIP 100PF 5% 50V
C181	1-162-915-11	s	CERAMIC, CHIP 10PF 50V
C182	1-113-682-11	s	TANTALUM, CHIP 33uF 20% 10V
C183	1-113-682-11	s	TANTALUM, CHIP 33uF 20% 10V
C184	1-126-412-11	s	ELECT, CHIP 220uF 20% 4V
C185	1-162-927-11	s	CERAMIC, CHIP 100PF 5% 50V
C186	1-164-156-11	s	CERAMIC, CHIP 0.1uF 25V
C187	1-162-923-11	s	CERAMIC, CHIP 47PF 5% 50V
C188	1-162-923-11	s	CERAMIC, CHIP 47PF 5% 50V
C189	1-164-156-11	s	CERAMIC, CHIP 0.1uF 25V
C190	1-164-156-11	s	CERAMIC, CHIP 0.1uF 25V
C191	1-164-156-11	s	CERAMIC, CHIP 0.1uF 25V
C192	1-162-922-11	s	CERAMIC, CHIP 39PF 5% 50V [for DSR-570WS/500WS]
	1-162-926-11	s	CERAMIC, CHIP 82PF 5% 50V [for DSR-570WSP/500WSP]
C193	1-162-911-11	s	CERAMIC, CHIP 6PF 50V [for DSR-570WS/500WS]
	1-162-917-11	s	CERAMIC, CHIP 15PF 5% 50V [for DSR-570WSP/500WSP]
C195	1-164-156-11	s	CERAMIC, CHIP 0.1uF 25V
C196	1-119-751-11	s	CAPACITOR, TANTALUM 22MF/16V
C197	1-137-910-11	s	CAPACITOR, TANTALUM ELECT 10MF
C198	1-164-156-11	s	CERAMIC, CHIP 0.1uF 25V
C199	1-164-156-11	s	CERAMIC, CHIP 0.1uF 25V
C200	1-162-913-11	s	CERAMIC, CHIP 8PF 50V

(ES-26/26P BOARD)

Ref. No. or Q'ty	Part No.	SP	Description
C201	1-164-156-11	s	CERAMIC, CHIP 0.1uF 25V
C202	1-162-907-11	s	CERAMIC, CHIP 2PF 50V
C203	1-162-910-11	s	CERAMIC, CHIP 5PF 50V
C204	1-104-913-11	s	TANTALUM, CHIP 10uF 20% 16V
C205	1-126-391-11	s	ELECT 47uF 20% 6.3V
C206	1-126-393-11	s	ELECT, CHIP 33uF 20% 10V
C207	1-162-906-11	s	CERAMIC, CHIP 1.5PF 0.25PF 50V
C208	1-104-851-11	s	TANTALUM, CHIP 10uF 20% 10V
C209	1-162-970-11	s	CERAMIC, CHIP 0.01uF 10% 25V
C210	1-162-909-11	s	CERAMIC, CHIP 4PF 0.25PF 50V
C211	1-162-910-11	s	CERAMIC, CHIP 5PF 50V [for DSR-570WS/500WS]
C214	1-162-964-11	s	CERAMIC, CHIP 0.001uF 10% 50V
C215	1-164-156-11	s	CERAMIC, CHIP 0.1uF 25V
C216	1-113-682-11	s	TANTALUM, CHIP 33uF 20% 10V
C217	1-162-908-11	s	CERAMIC, CHIP 3PF 50V [for DSR-570WS/500WS]
	1-162-923-11	s	CERAMIC, CHIP 47PF 5% 50V [for DSR-570WSP/500WSP]
C218	1-104-851-11	s	TANTALUM, CHIP 10uF 20% 10V
C219	1-113-682-11	s	TANTALUM, CHIP 33uF 20% 10V
C220	1-113-500-11	s	TANTALUM 100uF 20% 10V
C221	1-113-500-11	s	TANTALUM 100uF 20% 10V
C401	1-113-682-11	s	TANTALUM, CHIP 33uF 20% 10V
C402	1-113-682-11	s	TANTALUM, CHIP 33uF 20% 10V
C403	1-104-851-11	s	TANTALUM, CHIP 10uF 20% 10V
C404	1-115-154-11	s	ELECT 10uF 20% 16V
C405	1-115-154-11	s	ELECT 10uF 20% 16V
C406	1-162-927-11	s	CERAMIC, CHIP 100PF 5% 50V
C407	1-104-851-11	s	TANTALUM, CHIP 10uF 20% 10V
C408	1-104-851-11	s	TANTALUM, CHIP 10uF 20% 10V
C410	1-104-851-11	s	TANTALUM, CHIP 10uF 20% 10V
C411	1-162-917-11	s	CERAMIC, CHIP 15PF 5% 50V
C412	1-104-851-11	s	TANTALUM, CHIP 10uF 20% 10V
C413	1-117-139-11	s	ELECT 2.2uF 20% 35V
C414	1-164-156-11	s	CERAMIC, CHIP 0.1uF 25V
C415	1-164-156-11	s	CERAMIC, CHIP 0.1uF 25V
C416	1-164-156-11	s	CERAMIC, CHIP 0.1uF 25V
C417	1-117-139-11	s	ELECT 2.2uF 20% 35V
C418	1-164-156-11	s	CERAMIC, CHIP 0.1uF 25V
C419	1-104-851-11	s	TANTALUM, CHIP 10uF 20% 10V
C420	1-104-851-11	s	TANTALUM, CHIP 10uF 20% 10V
C421	1-164-156-11	s	CERAMIC, CHIP 0.1uF 25V
C422	1-164-156-11	s	CERAMIC, CHIP 0.1uF 25V
C423	1-164-156-11	s	CERAMIC, CHIP 0.1uF 25V
C424	1-137-910-11	s	CAPACITOR, TANTALUM ELECT 10MF
C425	1-137-910-11	s	CAPACITOR, TANTALUM ELECT 10MF
C426	1-164-156-11	s	CERAMIC, CHIP 0.1uF 25V
C427	1-164-156-11	s	CERAMIC, CHIP 0.1uF 25V
C428	1-164-156-11	s	CERAMIC, CHIP 0.1uF 25V
C429	1-164-156-11	s	CERAMIC, CHIP 0.1uF 25V
C430	1-126-395-11	s	ELECT 22uF 20% 16V
C431	1-162-911-11	s	CERAMIC, CHIP 6PF 50V
C432	*8 1-104-851-11	s	TANTALUM, CHIP 10uF 20% 10V
C433	*8 1-107-682-11	s	CERAMIC 1uF 10% 16V
C434	*8 1-107-682-11	s	CERAMIC 1uF 10% 16V
C435	*8 1-162-965-11	s	CERAMIC, CHIP 0.0015uF 10% 50V
C436	*8 1-104-851-11	s	TANTALUM, CHIP 10uF 20% 10V
C437	*8 1-164-156-11	s	CERAMIC, CHIP 0.1uF 25V

(ES-26/26P BOARD)

Ref. No. or Q'ty	Part No.	SP	Description
C601	1-164-156-11	s	CERAMIC, CHIP 0.1uF 25V
C602	1-164-156-11	s	CERAMIC, CHIP 0.1uF 25V
C603	1-164-156-11	s	CERAMIC, CHIP 0.1uF 25V
C604	1-164-156-11	s	CERAMIC, CHIP 0.1uF 25V
C605	1-164-346-11	s	CERAMIC 1uF 16V
C606	1-162-964-11	s	CERAMIC, CHIP 0.001uF 10% 50V
C607	1-164-346-11	s	CERAMIC 1uF 16V
C609	1-164-346-11	s	CERAMIC 1uF 16V
C610	1-113-682-11	s	TANTALUM, CHIP 33uF 20% 10V
C611	1-164-156-11	s	CERAMIC, CHIP 0.1uF 25V
C612	1-164-156-11	s	CERAMIC, CHIP 0.1uF 25V
C613	1-164-346-11	s	CERAMIC 1uF 16V
C614	1-164-156-11	s	CERAMIC, CHIP 0.1uF 25V
C615	1-164-156-11	s	CERAMIC, CHIP 0.1uF 25V
C616	1-162-970-11	s	CERAMIC, CHIP 0.01uF 10% 25V
C617	1-164-156-11	s	CERAMIC, CHIP 0.1uF 25V
C618	1-164-346-11	s	CERAMIC 1uF 16V
C619	1-162-970-11	s	CERAMIC, CHIP 0.01uF 10% 25V
C620	1-164-156-11	s	CERAMIC, CHIP 0.1uF 25V
C621	1-164-156-11	s	CERAMIC, CHIP 0.1uF 25V
C622	1-162-964-11	s	CERAMIC, CHIP 0.001uF 10% 50V
C623	1-164-156-11	s	CERAMIC, CHIP 0.1uF 25V
C624	1-113-682-11	s	TANTALUM, CHIP 33uF 20% 10V
C625	1-164-156-11	s	CERAMIC, CHIP 0.1uF 25V
C626	1-137-910-11	s	CAPACITOR, TANTALUM ELECT 10MF
C627	1-137-910-11	s	CAPACITOR, TANTALUM ELECT 10MF
C628	1-164-156-11	s	CERAMIC, CHIP 0.1uF 25V
C650	1-113-682-11	s	TANTALUM, CHIP 33uF 20% 10V
C651	1-164-156-11	s	CERAMIC, CHIP 0.1uF 25V
C652	1-104-851-11	s	TANTALUM, CHIP 10uF 20% 10V
C653	1-162-918-11	s	CERAMIC, CHIP 18PF 5% 50V [for DSR-570WS/500WS]
	1-162-921-11	s	CERAMIC, CHIP 33PF 5% 50V [for DSR-570WSP/500WSP]
C654	1-162-928-11	s	CERAMIC, CHIP 120PF 5% 50V [for DSR-570WS/500WS]
	1-164-816-11	s	CERAMIC, CHIP 220PF 2% 50V [for DSR-570WSP/500WSP]
C655	1-113-682-11	s	TANTALUM, CHIP 33uF 20% 10V
C656	1-113-682-11	s	TANTALUM, CHIP 33uF 20% 10V
C657	1-164-156-11	s	CERAMIC, CHIP 0.1uF 25V
C658	1-164-156-11	s	CERAMIC, CHIP 0.1uF 25V
C659	1-110-569-11	s	TANTALUM, CHIP 47uF 20% 6.3V
C660	1-110-569-11	s	TANTALUM, CHIP 47uF 20% 6.3V
C661	1-164-156-11	s	CERAMIC, CHIP 0.1uF 25V
C662	1-164-156-11	s	CERAMIC, CHIP 0.1uF 25V
C663	1-110-569-11	s	TANTALUM, CHIP 47uF 20% 6.3V
C665	1-162-918-11	s	CERAMIC, CHIP 18PF 5% 50V
C680	1-135-259-11	s	TANTALUM, CHIP 10uF 20% 6.3
C681	1-164-156-11	s	CERAMIC, CHIP 0.1uF 25V
C682	1-162-964-11	s	CERAMIC, CHIP 0.001uF 10% 50V
C683	1-164-156-11	s	CERAMIC, CHIP 0.1uF 25V
C684	1-162-964-11	s	CERAMIC, CHIP 0.001uF 10% 50V
C685	1-113-682-11	s	TANTALUM, CHIP 33uF 20% 10V
C686	1-113-682-11	s	TANTALUM, CHIP 33uF 20% 10V
C687	1-164-156-11	s	CERAMIC, CHIP 0.1uF 25V
C688	1-164-156-11	s	CERAMIC, CHIP 0.1uF 25V
C689	1-164-156-11	s	CERAMIC, CHIP 0.1uF 25V
C690	1-164-156-11	s	CERAMIC, CHIP 0.1uF 25V
C691	1-164-156-11	s	CERAMIC, CHIP 0.1uF 25V

(ES-26/26P BOARD)

Ref. No. or Q'ty	Part No.	SP	Description
C692	1-164-156-11	s	CERAMIC, CHIP 0.1uF 25V
C693	1-164-156-11	s	CERAMIC, CHIP 0.1uF 25V
C695	1-162-918-11	s	CERAMIC, CHIP 18PF 5% 50V
C696	1-104-851-11	s	TANTALUM, CHIP 10uF 20% 10V
C697	1-164-156-11	s	CERAMIC, CHIP 0.1uF 25V
C698	1-104-851-11	s	TANTALUM, CHIP 10uF 20% 10V
C701	1-113-682-11	s	TANTALUM, CHIP 33uF 20% 10V
C702	1-113-682-11	s	TANTALUM, CHIP 33uF 20% 10V
C703	1-164-156-11	s	CERAMIC, CHIP 0.1uF 25V
C704	1-164-156-11	s	CERAMIC, CHIP 0.1uF 25V
C705	1-162-964-11	s	CERAMIC, CHIP 0.001uF 10% 50V
C706	1-164-156-11	s	CERAMIC, CHIP 0.1uF 25V
C707	1-162-927-11	s	CERAMIC, CHIP 100PF 5% 50V
C708	1-162-927-11	s	CERAMIC, CHIP 100PF 5% 50V
C709	1-162-917-11	s	CERAMIC, CHIP 15PF 5% 50V
C710	1-162-917-11	s	CERAMIC, CHIP 15PF 5% 50V
C801	1-137-910-11	s	CAPACITOR, TANTALUM ELECT 10MF
C802	1-113-985-11	s	CAPACITOR, TANTALUM 10MF/20V
C803	1-164-156-11	s	CERAMIC, CHIP 0.1uF 25V
C804	1-115-154-11	s	ELECT 10uF 20% 16V
C805	1-126-393-11	s	ELECT, CHIP 33uF 20% 10V
C806	1-162-917-11	s	CERAMIC, CHIP 15PF 5% 50V
C807	1-162-970-11	s	CERAMIC, CHIP 0.01uF 10% 25V
C808	1-104-914-11	s	TANTALUM, CHIP 22uF 20% 16V
C809	1-164-156-11	s	CERAMIC, CHIP 0.1uF 25V
C810	1-164-156-11	s	CERAMIC, CHIP 0.1uF 25V
C811	1-162-923-11	s	CERAMIC, CHIP 47PF 5% 50V
C812	1-162-925-11	s	CERAMIC, CHIP 68PF 5% 50V [for DSR-570WS/500WS]
	1-162-921-11	s	CERAMIC, CHIP 33PF 5% 50V [for DSR-570WSP/500WSP]
C813	1-135-145-11	s	TANTALUM, CHIP 0.47uF 10% 35V
C814	1-162-922-11	s	CERAMIC, CHIP 39PF 5% 50V
C815	1-164-156-11	s	CERAMIC, CHIP 0.1uF 25V
C816	1-164-156-11	s	CERAMIC, CHIP 0.1uF 25V
C817	1-135-210-11	s	TANTALUM, CHIP 4.7uF 20% 10V
C818	1-162-970-11	s	CERAMIC, CHIP 0.01uF 10% 25V
C819	1-164-156-11	s	CERAMIC, CHIP 0.1uF 25V
C820	1-164-156-11	s	CERAMIC, CHIP 0.1uF 25V
C821	1-126-395-11	s	ELECT 22uF 20% 16V
C822	1-164-156-11	s	CERAMIC, CHIP 0.1uF 25V
C823	1-135-210-11	s	TANTALUM, CHIP 4.7uF 20% 10V
C824	1-126-391-11	s	ELECT 47uF 20% 6.3V
C825	1-164-156-11	s	CERAMIC, CHIP 0.1uF 25V
C826	1-137-910-11	s	CAPACITOR, TANTALUM ELECT 10MF
C827	1-107-689-21	s	TANTALUM, CHIP 1uF 20% 35V
C828	1-162-970-11	s	CERAMIC, CHIP 0.01uF 10% 25V
C829	1-162-970-11	s	CERAMIC, CHIP 0.01uF 10% 25V
C832	1-137-910-11	s	CAPACITOR, TANTALUM ELECT 10MF
C833	1-162-970-11	s	CERAMIC, CHIP 0.01uF 10% 25V
C834	1-164-156-11	s	CERAMIC, CHIP 0.1uF 25V
C835	1-137-910-11	s	CAPACITOR, TANTALUM ELECT 10MF
C836	1-164-156-11	s	CERAMIC, CHIP 0.1uF 25V
C837	1-164-156-11	s	CERAMIC, CHIP 0.1uF 25V
C840	1-162-923-11	s	CERAMIC, CHIP 47PF 5% 50V
C841	1-162-919-11	s	CERAMIC, CHIP 22PF 5% 50V [for DSR-570WS/500WS]
	1-162-926-11	s	CERAMIC, CHIP 82PF 5% 50V [for DSR-570WSP/500WSP]
C842	1-162-923-11	s	CERAMIC, CHIP 47PF 5% 50V

(ES-26/26P BOARD)

Ref. No. or Q'ty	Part No.	SP	Description
C843	1-162-923-11	s	CERAMIC, CHIP 47PF 5% 50V
C844	1-164-156-11	s	CERAMIC, CHIP 0.1uF 25V
C845	1-162-917-11	s	CERAMIC, CHIP 15PF 5% 50V
C846	1-137-910-11	s	CAPACITOR, TANTALUM ELECT 10MF
C847	1-113-985-11	s	CAPACITOR, TANTALUM 10MF/20V
C848	1-162-970-11	s	CERAMIC, CHIP 0.01uF 10% 25V
C849	1-164-156-11	s	CERAMIC, CHIP 0.1uF 25V
C850	1-104-913-11	s	TANTALUM, CHIP 10uF 20% 16V
C851	1-164-156-11	s	CERAMIC, CHIP 0.1uF 25V
C852	1-162-919-11	s	CERAMIC, CHIP 22PF 5% 50V
C853	1-164-156-11	s	CERAMIC, CHIP 0.1uF 25V
C854	1-164-156-11	s	CERAMIC, CHIP 0.1uF 25V
C855	1-104-913-11	s	TANTALUM, CHIP 10uF 20% 16V
C856	1-162-919-11	s	CERAMIC, CHIP 22PF 5% 50V
C857	1-164-156-11	s	CERAMIC, CHIP 0.1uF 25V
C858	1-164-739-11	s	CERAMIC, CHIP 560PF 5% 50V
C859	1-104-913-11	s	TANTALUM, CHIP 10uF 20% 16V
C860	1-164-156-11	s	CERAMIC, CHIP 0.1uF 25V
C861	1-164-156-11	s	CERAMIC, CHIP 0.1uF 25V
C862	1-164-156-11	s	CERAMIC, CHIP 0.1uF 25V
C863	1-164-156-11	s	CERAMIC, CHIP 0.1uF 25V
C864	1-162-919-11	s	CERAMIC, CHIP 22PF 5% 50V [for DSR-570WS/500WS]
	1-162-918-11	s	CERAMIC, CHIP 18PF 5% 50V [for DSR-570WSP/500WSP]
C865	1-162-970-11	s	CERAMIC, CHIP 0.01uF 10% 25V
C866	1-104-851-11	s	TANTALUM, CHIP 10uF 20% 10V [for DSR-570WS/500WS]
C867	1-164-156-11	s	CERAMIC, CHIP 0.1uF 25V [for DSR-570WS/500WS]
C868	1-164-156-11	s	CERAMIC, CHIP 0.1uF 25V [for DSR-570WS/500WS]
C871	1-164-156-11	s	CERAMIC, CHIP 0.1uF 25V
CP801	1-760-267-11	s	VCO, CRYSTAL 14.3818MHz [for DSR-570WS/500WS]
	1-760-269-11	s	OSCILLATOR, CRYSTAL (VCO TYPE) [for DSR-570WSP/500WSP]
D101	8-719-029-63	s	DIODE RD4.3uH-T1
D102	8-719-029-63	s	DIODE RD4.3uH-T1
D103	8-719-029-63	s	DIODE RD4.3uH-T1
D104	8-719-421-67	s	DIODE MA132WK
D105	8-719-059-52	s	DIODE MA3J14300LSO
D401	8-719-059-52	s	DIODE MA3J14300LSO
D402	8-719-029-55	s	DIODE RD2.0uH-T1
D405	8-719-800-76	s	DIODE 1SS226
D406	8-719-157-36	s	DIODE RD6.8M-B
D407	8-719-029-55	s	DIODE RD2.0uH-T1
D702	8-719-941-04	s	DIODE SB007-03CP
D703	8-719-059-52	s	DIODE MA3J14300LSO
D801	8-719-059-51	s	DIODE MA3J142E0LSO
D802	8-719-059-51	s	DIODE MA3J142E0LSO
D803	8-719-059-51	s	DIODE MA3J142E0LSO
D804	8-719-059-52	s	DIODE MA3J14300LSO
DL101 *6	1-411-271-21	s	DELAY LINE
*7	1-234-501-21	s	LINE, LC DELAY
DL102 *6	1-411-272-21	s	DELAY LINE
*7	1-234-502-21	s	LINE, LC DELAY
DL401	1-415-761-21	s	DELAY LINE, LC
DL402	1-415-760-21	s	DELAY LINE, LC

(ES-26/26P BOARD)

Ref. No. or Q'ty	Part No.	SP	Description
FL101	1-402-647-11	s	DELAY LINE (90 DEGREES) (NTSC) [for DSR-570WS/500WS]
	1-402-646-21	s	DELAY LINE (90-degree) (PAL) [for DSR-570WSP/500WSP]
FL102	1-233-737-11	s	FILTER, BAND PASS [for DSR-570WS/500WS]
	1-233-738-11	s	FILTER, BAND PASS [for DSR-570WSP/500WSP]
FL401	1-233-342-11	s	FILTER, TRAP
FL402	1-239-896-12	s	FILTER, EMI (SMD)
FL403	1-239-896-12	s	FILTER, EMI (SMD)
FL404	1-239-896-12	s	FILTER, EMI (SMD)
FL405	1-239-896-12	s	FILTER, EMI (SMD)
FL406	1-239-896-12	s	FILTER, EMI (SMD)
FL407	1-239-896-12	s	FILTER, EMI (SMD)
FL408	1-239-896-12	s	FILTER, EMI (SMD)
FL601	1-233-346-21	s	FILTER, BAND PASS (3.58MHZ) [for DSR-570WS/500WS]
	1-233-390-21	s	FILTER, BAND PASS [for DSR-570WSP/500WSP]
IC101	8-759-185-42	s	IC LM4040AIM3-2.5
IC102	8-759-669-72	s	IC TL064CPWR
IC103	8-759-678-06	s	IC CAT24WC02JI-TE13
IC104	8-759-064-35	s	IC MB88346BPFV-EF
IC105	8-759-669-45	s	IC TL062CPWR-12
IC106	8-759-064-35	s	IC MB88346BPFV-EF
IC107	8-759-523-02	s	IC TC74HC4053AFT(EL)
IC108	8-759-523-02	s	IC TC74HC4053AFT(EL)
IC109	8-759-530-27	s	IC TC4052BFT(EL,N)
IC110	8-759-082-61	s	IC TC4W53FU
IC111	8-752-090-56	s	IC CXA3178M-T4
IC112	8-759-082-61	s	IC TC4W53FU
IC113	8-759-530-05	s	IC TC4053BFT(EL,N)
IC114	8-759-082-61	s	IC TC4W53FU
IC115	8-759-058-62	s	IC TC7S08FU(TE85R)
IC116	8-759-058-58	s	IC TC7S04FU(TE85R)
IC117	8-759-523-02	s	IC TC74HC4053AFT(EL)
IC118	8-759-497-85	s	IC QL12X16B-XPF100C-D30WS
IC119	8-759-234-20	s	IC TC7S08F
IC120	8-759-058-58	s	IC TC7S04FU(TE85R) [for DSR-570WSP/500WSP]
IC401	8-759-082-60	s	IC TC7S66FU
IC402	8-759-082-60	s	IC TC7S66FU
IC403	8-759-523-02	s	IC TC74HC4053AFT(EL)
IC404	8-759-058-58	s	IC TC7S04FU(TE85R)
IC405	8-759-523-02	s	IC TC74HC4053AFT(EL)
IC406	8-759-488-48	s	IC NJM2249V(TE2)
IC407	8-759-488-48	s	IC NJM2249V(TE2)
IC408	8-759-523-02	s	IC TC74HC4053AFT(EL)
IC409	8-759-258-43	s	IC LT1253CS8-E2
IC410	8-759-260-44	s	IC LT1254CS-E2
IC411	8-759-082-61	s	IC TC4W53FU
IC412	8-759-258-43	s	IC LT1253CS8-E2
IC413	8-759-082-61	s	IC TC4W53FU
IC414	8-759-058-58	s	IC TC7S04FU(TE85R)
IC415 *8	8-752-375-75	s	IC CXD2131Q-T4
IC601	8-752-056-59	s	IC CXA1592R
IC602	8-759-082-61	s	IC TC4W53FU [for DSR-570WS/500WS]
IC603	8-759-082-61	s	IC TC4W53FU [for DSR-570WS/500WS]

(ES-26/26P BOARD)

Ref. No. or Q'ty	Part No.	SP	Description
IC604	8-759-660-23	s	IC SN74HCT08APWR
IC605	8-759-064-35	s	IC MB88346BPFV-EF
IC606	8-759-498-26	s	IC NJM2534V(TE2)
IC607	8-759-392-64	s	IC AD828AR
IC608	8-752-053-21	s	IC CXA1211M
IC609	8-759-498-26	s	IC NJM2534V(TE2)
IC610	8-759-392-64	s	IC AD828AR
IC701	8-752-054-80	s	IC CXA1521M
IC702	8-759-082-61	s	IC TC4W53FU
IC801	8-759-058-58	s	IC TC7S04FU(TE85R)
IC802	8-759-101-12	s	IC UPC311G2
IC803	8-759-064-35	s	IC MB88346BPFV-EF
IC804	8-752-335-47	s	IC CXD1216M
IC805	8-759-082-61	s	IC TC4W53FU
IC806	8-759-510-71	s	IC UPC358G2-E2
IC807	8-759-082-61	s	IC TC4W53FU
IC808	8-752-341-58	s	IC CXD1217Q
IC809	8-759-058-64	s	IC TC7S32FU(TE85R)
IC810	8-759-058-58	s	IC TC7S04FU(TE85R)
IC811	8-759-058-58	s	IC TC7S04FU(TE85R) [for DSR-570WS/500WS]
IC812	8-759-058-58	s	IC TC7S04FU(TE85R)
IC813	8-759-195-81	s	IC TC7S86FU
IC814	8-759-510-71	s	IC UPC358G2-E2
IC815	8-759-902-88	s	IC SN74LS123NS
IC816	8-759-082-61	s	IC TC4W53FU
IC817	8-759-523-04	s	IC TC74HC4538AFT(EL)
IC818	8-759-112-66	s	IC UPC812G2
IC819	8-759-673-37	s	IC MM74HC00MTCX
IC820	8-759-295-09	s	IC TLC2932IPW [for DSR-570WS/500WS]
IC821	8-759-031-84	s	IC TC7S04F [for DSR-570WS/500WS]
IC822	8-759-050-10	s	IC SN74HC163APW-E05 [for DSR-570WS/500WS]
IC823	8-759-050-10	s	IC SN74HC163APW-E05 [for DSR-570WS/500WS]
IC824	8-759-050-10	s	IC SN74HC163APW-E05 [for DSR-570WS/500WS]
IC825	8-759-058-54	s	IC TC7S00FU(TE85R)
IC826	8-759-447-77	s	IC TC7WH74FU(TE12R)
IC827	8-759-209-57	s	IC TC4S69F
L101	1-412-280-31	s	INDUCTOR 330uH
L102	1-412-959-11	s	INDUCTOR 47uH
L103	1-412-959-11	s	INDUCTOR 47uH
L104	1-412-959-11	s	INDUCTOR 47uH
L105	1-412-280-31	s	INDUCTOR 330uH
L106	1-410-392-11	s	INDUCTOR, CHIP 82uH [for DSR-570WS/500WS]
	1-410-656-11	s	INDUCTOR, CHIP 150uH [for DSR-570WSP/500WSP]
L107	1-412-955-11	s	INDUCTOR 22uH
L108	1-412-955-11	s	INDUCTOR 22uH
L109	1-412-955-11	s	INDUCTOR 22uH
L110	1-412-955-11	s	INDUCTOR 22uH
L401 *8	1-412-955-11	s	INDUCTOR 22uH
L601	1-414-402-11	s	INDUCTOR 47uH
L602	1-414-398-11	s	INDUCTOR 10uH
L603	1-414-402-11	s	INDUCTOR 47uH
L650	1-414-402-11	s	INDUCTOR 47uH

(ES-26/26P BOARD)

Ref. No. or Q'ty	Part No.	SP	Description
L651	1-412-960-21	s	INDUCTOR 56uH [for DSR-570WS/500WS]
	1-412-963-11	s	INDUCTOR 100uH [for DSR-570WSP/500WSP]
L652	1-414-404-11	s	INDUCTOR 100uH
L653	1-414-404-11	s	INDUCTOR 100uH
L680	1-414-404-11	s	INDUCTOR 100uH
L681	1-414-404-11	s	INDUCTOR 100uH
L701	1-414-402-11	s	INDUCTOR 47uH
L702	1-414-402-11	s	INDUCTOR 47uH
L801	1-412-955-11	s	INDUCTOR 22uH
L802	1-412-955-11	s	INDUCTOR 22uH
L803	1-410-656-11	s	INDUCTOR, CHIP 150uH [for DSR-570WS/500WS]
	1-410-393-11	s	INDUCTOR, CHIP 100uH [for DSR-570WSP/500WSP]
L804	1-412-957-11	s	INDUCTOR 33uH
L805	1-412-959-11	s	INDUCTOR 47uH
L806	1-412-959-11	s	INDUCTOR 47uH
L807	1-412-959-11	s	INDUCTOR 47uH
L808	1-412-959-11	s	INDUCTOR 47uH
L809	1-412-955-11	s	INDUCTOR 22uH
L810	1-412-955-11	s	INDUCTOR 22uH
L811	1-412-959-11	s	INDUCTOR 47uH
L812	1-412-955-11	s	INDUCTOR 22uH [for DSR-570WS/500WS]
Q101	8-729-101-07	s	TRANSISTOR 2SB798
Q102	8-729-101-07	s	TRANSISTOR 2SB798
Q103	8-729-807-51	s	TRANSISTOR 2SD1623-S
Q104	8-729-905-35	s	TRANSISTOR 2SC4081-R
Q105	8-729-905-35	s	TRANSISTOR 2SC4081-R
Q106	8-729-402-84	s	TRANSISTOR XN4601
Q107	8-729-402-78	s	TRANSISTOR XN6401
Q109	8-729-026-53	s	TRANSISTOR 2SA1576A-T106-QR
Q110	8-729-026-53	s	TRANSISTOR 2SA1576A-T106-QR
Q111	8-729-905-35	s	TRANSISTOR 2SC4081-R
Q112	8-729-402-78	s	TRANSISTOR XN6401
Q113	8-729-905-35	s	TRANSISTOR 2SC4081-R
Q114	8-729-402-84	s	TRANSISTOR XN4601
Q115	8-729-402-84	s	TRANSISTOR XN4601
Q116	8-729-402-19	s	TRANSISTOR XN6501
Q117	8-729-402-19	s	TRANSISTOR XN6501
Q118	8-729-905-35	s	TRANSISTOR 2SC4081-R
Q119	8-729-905-35	s	TRANSISTOR 2SC4081-R
Q120	8-729-402-84	s	TRANSISTOR XN4601
Q121	8-729-402-78	s	TRANSISTOR XN6401
Q122	8-729-026-53	s	TRANSISTOR 2SA1576A-T106-QR
Q123	8-729-026-53	s	TRANSISTOR 2SA1576A-T106-QR
Q124	8-729-905-35	s	TRANSISTOR 2SC4081-R
Q125	8-729-402-78	s	TRANSISTOR XN6401
Q126	8-729-905-35	s	TRANSISTOR 2SC4081-R
Q127	8-729-402-19	s	TRANSISTOR XN6501
Q128	8-729-402-84	s	TRANSISTOR XN4601
Q129	8-729-905-35	s	TRANSISTOR 2SC4081-R
Q130	8-729-905-35	s	TRANSISTOR 2SC4081-R
Q131	8-729-402-78	s	TRANSISTOR XN6401
Q132	8-729-402-78	s	TRANSISTOR XN6401
Q133	8-729-403-32	s	TRANSISTOR XN6534
Q134	8-729-402-84	s	TRANSISTOR XN4601
Q135	8-729-402-84	s	TRANSISTOR XN4601
Q136	8-729-905-35	s	TRANSISTOR 2SC4081-R

(ES-26/26P BOARD)

Ref. No. or Q'ty	Part No.	SP	Description
Q137	8-729-905-35	s	TRANSISTOR 2SC4081-R
Q138	8-729-402-84	s	TRANSISTOR XN4601
Q139	8-729-402-78	s	TRANSISTOR XN6401
Q140	8-729-026-53	s	TRANSISTOR 2SA1576A-T106-QR
Q141	8-729-905-35	s	TRANSISTOR 2SC4081-R
Q142	8-729-026-53	s	TRANSISTOR 2SA1576A-T106-QR
Q143	8-729-905-35	s	TRANSISTOR 2SC4081-R
Q144	8-729-403-29	s	TRANSISTOR XN6435
Q145	8-729-026-53	s	TRANSISTOR 2SA1576A-T106-QR
Q146	8-729-402-84	s	TRANSISTOR XN4601
Q147	8-729-026-53	s	TRANSISTOR 2SA1576A-T106-QR
Q148	8-729-402-19	s	TRANSISTOR XN6501
Q149	8-729-905-35	s	TRANSISTOR 2SC4081-R
Q150	8-729-403-32	s	TRANSISTOR XN6534
Q151	8-729-122-63	s	TRANSISTOR 2SA1226
Q152	8-729-402-19	s	TRANSISTOR XN6501
Q153	8-729-402-78	s	TRANSISTOR XN6401
Q154	8-729-402-19	s	TRANSISTOR XN6501
Q155	8-729-026-53	s	TRANSISTOR 2SA1576A-T106-QR
Q156	8-729-026-53	s	TRANSISTOR 2SA1576A-T106-QR
Q401	8-729-117-32	s	TRANSISTOR 2SC4177
Q402	8-729-403-29	s	TRANSISTOR XN6435
Q403	8-729-117-32	s	TRANSISTOR 2SC4177
Q404	8-729-402-19	s	TRANSISTOR XN6501
Q405	8-729-117-32	s	TRANSISTOR 2SC4177
Q406	8-729-403-32	s	TRANSISTOR XN6534
Q407	8-729-403-29	s	TRANSISTOR XN6435
Q408	8-729-402-84	s	TRANSISTOR XN4601
Q410	8-729-402-78	s	TRANSISTOR XN6401
Q411	8-729-402-84	s	TRANSISTOR XN4601
Q412	8-729-403-29	s	TRANSISTOR XN6435
Q413	8-729-403-32	s	TRANSISTOR XN6534
Q414	8-729-117-32	s	TRANSISTOR 2SC4177
Q415	8-729-403-29	s	TRANSISTOR XN6435
Q416	8-729-402-84	s	TRANSISTOR XN4601
Q417	8-729-402-84	s	TRANSISTOR XN4601
Q418	8-729-905-35	s	TRANSISTOR 2SC4081-R
Q419	8-729-101-07	s	TRANSISTOR 2SB798
Q420	8-729-807-51	s	TRANSISTOR 2SD1623-S
Q421	8-729-905-35	s	TRANSISTOR 2SC4081-R
Q422	8-729-905-35	s	TRANSISTOR 2SC4081-R
Q423	8-729-905-35	s	TRANSISTOR 2SC4081-R
Q424	8-729-402-19	s	TRANSISTOR XN6501
Q426	8-729-026-53	s	TRANSISTOR 2SA1576A-T106-QR
Q427	8-729-402-19	s	TRANSISTOR XN6501
Q428	8-729-026-53	s	TRANSISTOR 2SA1576A-T106-QR
Q429	8-729-026-53	s	TRANSISTOR 2SA1576A-T106-QR
Q430 *8	8-729-905-35	s	TRANSISTOR 2SC4081-R
Q601	8-729-905-35	s	TRANSISTOR 2SC4081-R
Q602	8-729-905-35	s	TRANSISTOR 2SC4081-R
Q603	8-729-026-53	s	TRANSISTOR 2SA1576A-T106-QR
Q604	8-729-026-53	s	TRANSISTOR 2SA1576A-T106-QR
Q650	8-729-402-78	s	TRANSISTOR XN6401
Q651	8-729-402-19	s	TRANSISTOR XN6501
Q652	8-729-402-84	s	TRANSISTOR XN4601
Q653	8-729-026-53	s	TRANSISTOR 2SA1576A-T106-QR
Q680	6-550-007-01	s	TRANSISTOR UMC3NTR
Q701	8-729-402-78	s	TRANSISTOR XN6401
Q702	8-729-905-35	s	TRANSISTOR 2SC4081-R

(ES-26/26P BOARD)

Ref. No. or Q'ty	Part No.	SP	Description
Q703	8-729-402-84	s	TRANSISTOR XN4601
Q801	8-729-026-53	s	TRANSISTOR 2SA1576A-T106-QR
Q802	8-729-026-53	s	TRANSISTOR 2SA1576A-T106-QR
Q803	8-729-402-19	s	TRANSISTOR XN6501
Q804	8-729-403-29	s	TRANSISTOR XN6435
Q805	8-729-026-53	s	TRANSISTOR 2SA1576A-T106-QR
Q806	8-729-402-19	s	TRANSISTOR XN6501
Q807	8-729-403-29	s	TRANSISTOR XN6435
Q808	8-729-402-84	s	TRANSISTOR XN4601
Q809	8-729-141-53	s	TRANSISTOR 2SK94-X2X3X4
Q811	8-729-402-84	s	TRANSISTOR XN4601
R101	1-218-881-11	s	METAL, CHIP 27K 0.50% 1/16W
R102	1-216-833-91	s	METAL, CHIP 10K 5% 1/16W
R103	1-218-889-11	s	METAL, CHIP 56K 0.50% 1/16W
R104	1-218-879-11	s	METAL, CHIP 22K 0.50% 1/16W
R105	1-218-883-11	s	METAL, CHIP 33K 0.50% 1/16W
R106	1-216-827-11	s	METAL, CHIP 3.3K 5% 1/16W
R107	1-218-881-11	s	METAL, CHIP 27K 0.50% 1/16W
R108	1-218-863-11	s	METAL, CHIP 4.7K 0.50% 1/16W
R109	1-218-883-11	s	METAL, CHIP 33K 0.50% 1/16W
R110	1-218-873-11	s	METAL, CHIP 12K 0.50% 1/16W
R111	1-218-884-11	s	METAL, CHIP 36K 0.50% 1/16W
R112	1-216-839-11	s	METAL, CHIP 33K 5% 1/16W
R113	1-218-871-11	s	METAL, CHIP 10K 0.50% 1/16W
R114	1-218-865-11	s	METAL, CHIP 5.6K 0.50% 1/16W
R115	1-218-855-11	s	METAL, CHIP 2.2K 0.50% 1/16W
R116	1-218-859-11	s	METAL, CHIP 3.3K 0.50% 1/16W
R117	1-218-886-11	s	METAL, CHIP 43K 0.50% 1/16W
R118	1-218-883-11	s	METAL, CHIP 33K 0.50% 1/16W
R119	1-218-855-11	s	METAL, CHIP 2.2K 0.50% 1/16W
R120	1-218-887-11	s	METAL, CHIP 47K 0.50% 1/16W
R121	1-218-893-11	s	METAL, CHIP 82K 0.50% 1/16W
R122	1-218-887-11	s	METAL, CHIP 47K 0.50% 1/16W
R123	1-218-893-11	s	METAL, CHIP 82K 0.50% 1/16W
R124	1-218-887-11	s	METAL, CHIP 47K 0.50% 1/16W
R125	1-218-893-11	s	METAL, CHIP 82K 0.50% 1/16W
R126	1-216-797-11	s	METAL, CHIP 10 5% 1/16W
R127	1-216-829-11	s	METAL, CHIP 4.7K 5% 1/16W
R128	1-216-839-11	s	METAL, CHIP 33K 5% 1/16W
R129	1-218-847-11	s	METAL, CHIP 1K 0.50% 1/16W
R130	1-216-821-11	s	METAL, CHIP 1K 5% 1/16W
R131	1-216-829-11	s	METAL, CHIP 4.7K 5% 1/16W
R132	1-216-823-11	s	METAL, CHIP 1.5K 5% 1/16W
R133	1-211-990-11	s	METAL, CHIP 75 0.50% 1/16W
R134	1-218-846-11	s	METAL, CHIP 910 0.50% 1/16W
R135	1-211-973-11	s	METAL, CHIP 15 0.50% 1/16W
R136	1-216-829-11	s	METAL, CHIP 4.7K 5% 1/16W
R137	1-216-809-11	s	METAL, CHIP 100 5% 1/16W
R138	1-216-823-11	s	METAL, CHIP 1.5K 5% 1/16W
R139	1-216-809-11	s	METAL, CHIP 100 5% 1/16W
R140	1-211-987-11	s	METAL, CHIP 56 0.50% 1/16W
R141	1-216-809-11	s	METAL, CHIP 100 5% 1/16W
R142	1-218-828-11	s	METAL, CHIP 160 0.50% 1/16W
R143	1-211-973-11	s	METAL, CHIP 15 0.50% 1/16W
R144	1-218-840-11	s	METAL, CHIP 510 0.50% 1/16W
R145	1-216-864-11	s	METAL, CHIP 0 5% 1/16W
R146	1-211-973-11	s	METAL, CHIP 15 0.50% 1/16W
R147	1-216-829-11	s	METAL, CHIP 4.7K 5% 1/16W

(ES-26/26P BOARD)

Ref. No. or Q'ty	Part No.	SP	Description
R148	1-216-833-91	s	METAL, CHIP 10K 5% 1/16W
R149	1-216-827-11	s	METAL, CHIP 3.3K 5% 1/16W
R150	1-216-829-11	s	METAL, CHIP 4.7K 5% 1/16W
R151	1-216-829-11	s	METAL, CHIP 4.7K 5% 1/16W
R152	1-216-821-11	s	METAL, CHIP 1K 5% 1/16W
R153	1-218-871-11	s	METAL, CHIP 10K 0.50% 1/16W
R154	1-218-855-11	s	METAL, CHIP 2.2K 0.50% 1/16W
R155	1-216-833-91	s	METAL, CHIP 10K 5% 1/16W
R156	1-218-859-11	s	METAL, CHIP 3.3K 0.50% 1/16W
R157	1-218-857-11	s	METAL, CHIP 2.7K 0.50% 1/16W
R158	1-216-826-11	s	METAL, CHIP 2.7K 5% 1/16W
R159	1-218-883-11	s	METAL, CHIP 33K 0.50% 1/16W
R160	1-216-845-11	s	METAL, CHIP 100K 5% 1/16W
R161	1-218-847-11	s	METAL, CHIP 1K 0.50% 1/16W
R162	1-216-845-11	s	METAL, CHIP 100K 5% 1/16W [for DSR-570WS/500WS]
R163	1-216-837-11	s	METAL, CHIP 22K 5% 1/16W [for DSR-570WSP/500WSP]
R164	1-216-829-11	s	METAL, CHIP 4.7K 5% 1/16W
R165	1-216-829-11	s	METAL, CHIP 4.7K 5% 1/16W
R166	1-216-821-11	s	METAL, CHIP 1K 5% 1/16W
R167	1-216-821-11	s	METAL, CHIP 1K 5% 1/16W
R168	1-216-829-11	s	METAL, CHIP 4.7K 5% 1/16W
R169	1-216-801-11	s	METAL, CHIP 22 5% 1/16W
R170	1-216-829-11	s	METAL, CHIP 4.7K 5% 1/16W
R171	1-218-855-11	s	METAL, CHIP 2.2K 0.50% 1/16W [for DSR-570WS/500WS]
	1-218-859-11	s	METAL, CHIP 3.3K 0.50% 1/16W [for DSR-570WSP/500WSP]
R172	1-216-823-11	s	METAL, CHIP 1.5K 5% 1/16W [for DSR-570WS/500WS]
	1-216-829-11	s	METAL, CHIP 4.7K 5% 1/16W [for DSR-570WSP/500WSP]
R173	1-218-865-11	s	METAL, CHIP 5.6K 0.50% 1/16W
R174	1-218-847-11	s	METAL, CHIP 1K 0.50% 1/16W
R175	1-218-847-11	s	METAL, CHIP 1K 0.50% 1/16W
R176	1-218-851-11	s	METAL, CHIP 1.5K 0.50% 1/16W [for DSR-570WS/500WS]
	1-218-853-11	s	METAL, CHIP 1.8K 0.50% 1/16W [for DSR-570WSP/500WSP]
R177	1-218-875-11	s	METAL, CHIP 15K 0.50% 1/16W
R178	1-218-865-11	s	METAL, CHIP 5.6K 0.50% 1/16W
R179	1-216-809-11	s	METAL, CHIP 100 5% 1/16W
R180	1-216-825-11	s	METAL, CHIP 2.2K 5% 1/16W
R181	1-216-835-11	s	METAL, CHIP 15K 5% 1/16W
R182	1-216-828-11	s	METAL, CHIP 3.9K 5% 1/16W
R183	1-216-825-11	s	METAL, CHIP 2.2K 5% 1/16W
R184	1-218-854-11	s	METAL, CHIP 2K 0.50% 1/16W
R185	1-216-812-11	s	METAL, CHIP 180 5% 1/16W
R186	1-216-825-11	s	METAL, CHIP 2.2K 5% 1/16W
R187	1-216-797-11	s	METAL, CHIP 10 5% 1/16W
R188	1-216-797-11	s	METAL, CHIP 10 5% 1/16W
R189	1-216-797-11	s	METAL, CHIP 10 5% 1/16W
R192	1-216-797-11	s	METAL, CHIP 10 5% 1/16W
R193	1-216-829-11	s	METAL, CHIP 4.7K 5% 1/16W
R194	1-216-839-11	s	METAL, CHIP 33K 5% 1/16W
R195	1-218-847-11	s	METAL, CHIP 1K 0.50% 1/16W
R196	1-216-821-11	s	METAL, CHIP 1K 5% 1/16W
R197	1-216-829-11	s	METAL, CHIP 4.7K 5% 1/16W
R198	1-216-823-11	s	METAL, CHIP 1.5K 5% 1/16W
R199	1-211-990-11	s	METAL, CHIP 75 0.50% 1/16W

(ES-26/26P BOARD)

Ref. No. or Q'ty	Part No.	SP	Description
R200	1-218-846-11	s	METAL, CHIP 910 0.50% 1/16W
R201	1-211-973-11	s	METAL, CHIP 15 0.50% 1/16W
R202	1-216-829-11	s	METAL, CHIP 4.7K 5% 1/16W
R203	1-216-809-11	s	METAL, CHIP 100 5% 1/16W
R204	1-216-823-11	s	METAL, CHIP 1.5K 5% 1/16W
R205	1-216-809-11	s	METAL, CHIP 100 5% 1/16W
R206	1-211-987-11	s	METAL, CHIP 56 0.50% 1/16W
R207	1-216-809-11	s	METAL, CHIP 100 5% 1/16W
R208	1-218-828-11	s	METAL, CHIP 160 0.50% 1/16W
R209	1-211-973-11	s	METAL, CHIP 15 0.50% 1/16W
R210	1-216-864-11	s	METAL, CHIP 0 5% 1/16W
R211	1-218-840-11	s	METAL, CHIP 510 0.50% 1/16W
R212	1-211-973-11	s	METAL, CHIP 15 0.50% 1/16W
R213	1-216-829-11	s	METAL, CHIP 4.7K 5% 1/16W
R214	1-216-833-91	s	METAL, CHIP 10K 5% 1/16W
R215	1-216-827-11	s	METAL, CHIP 3.3K 5% 1/16W
R216	1-216-829-11	s	METAL, CHIP 4.7K 5% 1/16W
R217	1-216-829-11	s	METAL, CHIP 4.7K 5% 1/16W
R218	1-216-821-11	s	METAL, CHIP 1K 5% 1/16W
R219	1-218-871-11	s	METAL, CHIP 10K 0.50% 1/16W
R220	1-218-855-11	s	METAL, CHIP 2.2K 0.50% 1/16W
R221	1-218-863-11	s	METAL, CHIP 4.7K 0.50% 1/16W [for DSR-570WS/500WS]
	1-218-867-11	s	METAL, CHIP 6.8K 0.50% 1/16W [for DSR-570WSP/500WSP]
R222	1-218-859-11	s	METAL, CHIP 3.3K 0.50% 1/16W
R223	1-218-851-11	s	METAL, CHIP 1.5K 0.50% 1/16W
R224	1-216-826-11	s	METAL, CHIP 2.7K 5% 1/16W
R225	1-218-883-11	s	METAL, CHIP 33K 0.50% 1/16W
R226	1-216-845-11	s	METAL, CHIP 100K 5% 1/16W
R227	1-218-847-11	s	METAL, CHIP 1K 0.50% 1/16W
R228	1-216-809-11	s	METAL, CHIP 100 5% 1/16W
R229	1-216-809-11	s	METAL, CHIP 100 5% 1/16W
R230	1-216-833-91	s	METAL, CHIP 10K 5% 1/16W
R231	1-216-833-91	s	METAL, CHIP 10K 5% 1/16W
R232	1-216-841-11	s	METAL, CHIP 47K 5% 1/16W
R233	1-216-809-11	s	METAL, CHIP 100 5% 1/16W
R234	1-216-809-11	s	METAL, CHIP 100 5% 1/16W
R235	1-216-829-11	s	METAL, CHIP 4.7K 5% 1/16W
R236	1-216-829-11	s	METAL, CHIP 4.7K 5% 1/16W
R237	1-216-807-11	s	METAL, CHIP 68 5% 1/16W
R238	1-216-807-11	s	METAL, CHIP 68 5% 1/16W
R239	1-216-833-91	s	METAL, CHIP 10K 5% 1/16W
R240	1-216-829-11	s	METAL, CHIP 4.7K 5% 1/16W
R241	1-216-836-11	s	METAL, CHIP 18K 5% 1/16W
R242	1-216-821-11	s	METAL, CHIP 1K 5% 1/16W
R243	1-216-797-11	s	METAL, CHIP 10 5% 1/16W
R244	1-216-829-11	s	METAL, CHIP 4.7K 5% 1/16W
R245	1-216-839-11	s	METAL, CHIP 33K 5% 1/16W
R246	1-218-855-11	s	METAL, CHIP 2.2K 0.50% 1/16W
R247	1-216-856-11	s	METAL, CHIP 820K 5% 1/16W
R248	1-216-829-11	s	METAL, CHIP 4.7K 5% 1/16W
R249	1-216-809-11	s	METAL, CHIP 100 5% 1/16W
R250	1-216-839-11	s	METAL, CHIP 33K 5% 1/16W
R251	1-216-829-11	s	METAL, CHIP 4.7K 5% 1/16W
R252	1-216-823-11	s	METAL, CHIP 1.5K 5% 1/16W
R253	1-216-829-11	s	METAL, CHIP 4.7K 5% 1/16W
R254	1-216-809-11	s	METAL, CHIP 100 5% 1/16W
R255	1-216-829-11	s	METAL, CHIP 4.7K 5% 1/16W

(ES-26/26P BOARD)

Ref. No. or Q'ty	Part No.	SP	Description
R256	1-216-809-11	s	METAL, CHIP 100 5% 1/16W
R257	1-216-823-11	s	METAL, CHIP 1.5K 5% 1/16W
R258	1-216-809-11	s	METAL, CHIP 100 5% 1/16W
R259	1-216-829-11	s	METAL, CHIP 4.7K 5% 1/16W
R260	1-216-826-11	s	METAL, CHIP 2.7K 5% 1/16W
R261	1-216-809-11	s	METAL, CHIP 100 5% 1/16W
R262	1-218-844-11	s	METAL, CHIP 750 0.50% 1/16W
R263	1-218-859-11	s	METAL, CHIP 3.3K 0.50% 1/16W
R264	1-218-861-11	s	METAL, CHIP 3.9K 0.50% 1/16W
R265	1-216-824-11	s	METAL, CHIP 1.8K 5% 1/16W
R266	1-216-829-11	s	METAL, CHIP 4.7K 5% 1/16W
R267	1-216-805-11	s	METAL, CHIP 47 5% 1/16W
R268	1-216-833-91	s	METAL, CHIP 10K 5% 1/16W
R269	1-216-821-11	s	METAL, CHIP 1K 5% 1/16W
R270	1-216-823-11	s	METAL, CHIP 1.5K 5% 1/16W
R271	1-211-987-11	s	METAL, CHIP 56 0.50% 1/16W
R272	1-216-809-11	s	METAL, CHIP 100 5% 1/16W
R273	1-211-969-11	s	METAL, CHIP 10 0.50% 1/16W
R274	1-218-846-11	s	METAL, CHIP 910 0.50% 1/16W
R275	1-216-864-11	s	METAL, CHIP 0 5% 1/16W
R276	1-216-824-11	s	METAL, CHIP 1.8K 5% 1/16W
R277	1-216-826-11	s	METAL, CHIP 2.7K 5% 1/16W
R278	1-218-855-11	s	METAL, CHIP 2.2K 0.50% 1/16W
R279	1-218-855-11	s	METAL, CHIP 2.2K 0.50% 1/16W
R280	1-216-821-11	s	METAL, CHIP 1K 5% 1/16W
R281	1-218-833-11	s	METAL, CHIP 270 0.50% 1/16W [for DSR-570WS/500WS]
	1-218-834-11	s	METAL, CHIP 300 0.50% 1/16W [for DSR-570WSP/500WSP]
R282	1-211-974-11	s	METAL, CHIP 16 0.50% 1/16W [for DSR-570WS/500WS]
	1-216-864-11	s	METAL, CHIP 0 5% 1/16W [for DSR-570WSP/500WSP]
R283	1-218-843-11	s	METAL, CHIP 680 0.50% 1/16W
R284	1-211-981-11	s	METAL, CHIP 33 0.50% 1/16W [for DSR-570WS/500WS]
	1-211-990-11	s	METAL, CHIP 75 0.50% 1/16W [for DSR-570WSP/500WSP]
R285	1-218-866-11	s	METAL, CHIP 6.2K 0.50% 1/16W
R286	1-216-829-11	s	METAL, CHIP 4.7K 5% 1/16W
R287	1-216-823-11	s	METAL, CHIP 1.5K 5% 1/16W
R288	1-218-853-11	s	METAL, CHIP 1.8K 0.50% 1/16W
R289	1-216-829-11	s	METAL, CHIP 4.7K 5% 1/16W
R290	1-218-855-11	s	METAL, CHIP 2.2K 0.50% 1/16W
R291	1-218-855-11	s	METAL, CHIP 2.2K 0.50% 1/16W
R292	1-216-821-11	s	METAL, CHIP 1K 5% 1/16W
R293	1-216-809-11	s	METAL, CHIP 100 5% 1/16W
R294	1-216-837-11	s	METAL, CHIP 22K 5% 1/16W
R295	1-216-825-11	s	METAL, CHIP 2.2K 5% 1/16W
R296	1-216-821-11	s	METAL, CHIP 1K 5% 1/16W
R297	1-216-827-11	s	METAL, CHIP 3.3K 5% 1/16W
R298	1-216-819-11	s	METAL, CHIP 680 5% 1/16W
R299	*6 1-218-854-11	s	METAL, CHIP 2K 0.50% 1/16W
	*7 1-218-855-11	s	METAL, CHIP 2.2K 0.50% 1/16W
R300	1-216-821-11	s	METAL, CHIP 1K 5% 1/16W
R301	1-216-825-11	s	METAL, CHIP 2.2K 5% 1/16W
R302	1-218-839-11	s	METAL, CHIP 470 0.50% 1/16W
R303	1-218-839-11	s	METAL, CHIP 470 0.50% 1/16W
R304	1-216-829-11	s	METAL, CHIP 4.7K 5% 1/16W
R305	1-216-813-11	s	METAL, CHIP 220 5% 1/16W

(ES-26/26P BOARD)

Ref. No. or Q'ty	Part No.	SP	Description
R306	1-216-813-11	s	METAL, CHIP 220 5% 1/16W
R307	1-216-829-11	s	METAL, CHIP 4.7K 5% 1/16W
R308	1-216-829-11	s	METAL, CHIP 4.7K 5% 1/16W
R309	1-218-855-11	s	METAL, CHIP 2.2K 0.50% 1/16W
R310	1-216-829-11	s	METAL, CHIP 4.7K 5% 1/16W
R311	1-216-827-11	s	METAL, CHIP 3.3K 5% 1/16W
R312	1-218-856-11	s	METAL, CHIP 2.4K 0.50% 1/16W
R313	1-211-985-11	s	METAL, CHIP 47 0.50% 1/16W
R314	1-216-813-11	s	METAL, CHIP 220 5% 1/16W
R315	1-216-864-11	s	METAL, CHIP 0 5% 1/16W
R316	1-216-827-11	s	METAL, CHIP 3.3K 5% 1/16W
R317	1-218-855-11	s	METAL, CHIP 2.2K 0.50% 1/16W
R318	1-218-856-11	s	METAL, CHIP 2.4K 0.50% 1/16W
R319	1-218-863-11	s	METAL, CHIP 4.7K 0.50% 1/16W
R320	1-216-829-11	s	METAL, CHIP 4.7K 5% 1/16W
R321	1-216-823-11	s	METAL, CHIP 1.5K 5% 1/16W
R323	1-216-809-11	s	METAL, CHIP 100 5% 1/16W
R324	1-216-825-11	s	METAL, CHIP 2.2K 5% 1/16W
R325	1-216-809-11	s	METAL, CHIP 100 5% 1/16W
R326	1-216-809-11	s	METAL, CHIP 100 5% 1/16W
R327	1-216-794-11	s	METAL, CHIP 5.6 5% 1/16W
R328	1-216-794-11	s	METAL, CHIP 5.6 5% 1/16W
R329	1-216-805-11	s	METAL, CHIP 47 5% 1/16W
R330	1-218-831-11	s	METAL, CHIP 220 0.50% 1/16W
R331	1-218-847-11	s	METAL, CHIP 1K 0.50% 1/16W
R332	1-211-990-11	s	METAL, CHIP 75 0.50% 1/16W
R333	1-218-847-11	s	METAL, CHIP 1K 0.50% 1/16W
R334	1-218-831-11	s	METAL, CHIP 220 0.50% 1/16W
R335	1-216-837-11	s	METAL, CHIP 22K 5% 1/16W
R336	1-216-837-11	s	METAL, CHIP 22K 5% 1/16W
R337	1-216-833-91	s	METAL, CHIP 10K 5% 1/16W
R338	1-216-833-91	s	METAL, CHIP 10K 5% 1/16W
R339	1-216-829-11	s	METAL, CHIP 4.7K 5% 1/16W
R340	1-216-829-11	s	METAL, CHIP 4.7K 5% 1/16W
R341	1-216-809-11	s	METAL, CHIP 100 5% 1/16W
R342	1-216-809-11	s	METAL, CHIP 100 5% 1/16W
R343	1-216-821-11	s	METAL, CHIP 1K 5% 1/16W
R344	1-216-809-11	s	METAL, CHIP 100 5% 1/16W
R346	1-216-845-11	s	METAL, CHIP 100K 5% 1/16W
R347	1-216-829-11	s	METAL, CHIP 4.7K 5% 1/16W
R348	1-218-866-11	s	METAL, CHIP 6.2K 0.50% 1/16W
R349	1-216-830-11	s	METAL, CHIP 5.6K 5% 1/16W [for DSR-570WS/500WS]
	1-216-828-11	s	METAL, CHIP 3.9K 5% 1/16W [for DSR-570WSP/500WSP]
R350	1-216-829-11	s	METAL, CHIP 4.7K 5% 1/16W
R351	1-216-848-11	s	METAL, CHIP 180K 5% 1/16W
R352	1-216-829-11	s	METAL, CHIP 4.7K 5% 1/16W
R354	1-216-827-11	s	METAL, CHIP 3.3K 5% 1/16W
R355	1-216-825-11	s	METAL, CHIP 2.2K 5% 1/16W
R356	1-216-864-11	s	METAL, CHIP 0 5% 1/16W [for DSR-570WSP/500WSP]
R357	1-216-864-11	s	METAL, CHIP 0 5% 1/16W [for DSR-570WS/500WS]
R358	1-216-809-11	s	METAL, CHIP 100 5% 1/16W
R359	1-216-864-11	s	METAL, CHIP 0 5% 1/16W
R360	1-216-829-11	s	METAL, CHIP 4.7K 5% 1/16W [for DSR-570WSP/500WSP]
R361	1-218-848-11	s	METAL, CHIP 1.1K 0.50% 1/16W [for DSR-570WSP/500WSP]

(ES-26/26P BOARD)

Ref. No. or Q'ty	Part No.	SP	Description
R401	1-216-809-11	s	METAL, CHIP 100 5% 1/16W
R402	1-216-825-11	s	METAL, CHIP 2.2K 5% 1/16W
R403	1-216-821-11	s	METAL, CHIP 1K 5% 1/16W
R404	1-216-840-11	s	METAL, CHIP 39K 5% 1/16W
R405	1-216-827-11	s	METAL, CHIP 3.3K 5% 1/16W
R406	1-216-829-11	s	METAL, CHIP 4.7K 5% 1/16W
R407	1-216-822-11	s	METAL, CHIP 1.2K 5% 1/16W
R408	1-216-809-11	s	METAL, CHIP 100 5% 1/16W
R409	1-216-829-11	s	METAL, CHIP 4.7K 5% 1/16W
R410	1-216-809-11	s	METAL, CHIP 100 5% 1/16W
R411	1-216-809-11	s	METAL, CHIP 100 5% 1/16W
R412	1-216-825-11	s	METAL, CHIP 2.2K 5% 1/16W
R413	1-216-825-11	s	METAL, CHIP 2.2K 5% 1/16W
R414	1-218-847-11	s	METAL, CHIP 1K 0.50% 1/16W
R415	1-218-847-11	s	METAL, CHIP 1K 0.50% 1/16W
R416	1-216-833-91	s	METAL, CHIP 10K 5% 1/16W
R417	1-216-837-11	s	METAL, CHIP 22K 5% 1/16W
R418	1-216-813-11	s	METAL, CHIP 220 5% 1/16W
R419	1-216-825-11	s	METAL, CHIP 2.2K 5% 1/16W
R421	1-216-833-91	s	METAL, CHIP 10K 5% 1/16W
R422	1-216-821-11	s	METAL, CHIP 1K 5% 1/16W
R423	1-216-833-91	s	METAL, CHIP 10K 5% 1/16W
R424	1-216-827-11	s	METAL, CHIP 3.3K 5% 1/16W
R425	1-216-829-11	s	METAL, CHIP 4.7K 5% 1/16W
R426	1-216-825-11	s	METAL, CHIP 2.2K 5% 1/16W
R427	1-216-829-11	s	METAL, CHIP 4.7K 5% 1/16W
R428	1-216-829-11	s	METAL, CHIP 4.7K 5% 1/16W
R429	1-216-809-11	s	METAL, CHIP 100 5% 1/16W
R430	1-216-809-11	s	METAL, CHIP 100 5% 1/16W
R431	1-216-864-11	s	METAL, CHIP 0 5% 1/16W
R432	1-216-825-11	s	METAL, CHIP 2.2K 5% 1/16W
R433	1-216-809-11	s	METAL, CHIP 100 5% 1/16W
R435	1-218-847-11	s	METAL, CHIP 1K 0.50% 1/16W
R436	1-216-813-11	s	METAL, CHIP 220 5% 1/16W
R437	1-218-859-11	s	METAL, CHIP 3.3K 0.50% 1/16W
R438	1-218-855-11	s	METAL, CHIP 2.2K 0.50% 1/16W
R439	1-216-825-11	s	METAL, CHIP 2.2K 5% 1/16W
R440	1-216-809-11	s	METAL, CHIP 100 5% 1/16W
R441	1-216-825-11	s	METAL, CHIP 2.2K 5% 1/16W
R442 *2	1-218-868-11	s	METAL, CHIP 7.5K 0.50% 1/16W
*3	1-218-873-11	s	METAL, CHIP 12K 0.50% 1/16W
R443	1-218-845-11	s	METAL, CHIP 820 0.50% 1/16W
R444	1-218-847-11	s	METAL, CHIP 1K 0.50% 1/16W
R445	1-216-827-11	s	METAL, CHIP 3.3K 5% 1/16W
R446	1-216-829-11	s	METAL, CHIP 4.7K 5% 1/16W
R447	1-216-822-11	s	METAL, CHIP 1.2K 5% 1/16W
R448	1-216-821-11	s	METAL, CHIP 1K 5% 1/16W
R449	1-218-847-11	s	METAL, CHIP 1K 0.50% 1/16W
R450	1-218-851-11	s	METAL, CHIP 1.5K 0.50% 1/16W
R451	1-218-847-11	s	METAL, CHIP 1K 0.50% 1/16W
R452	1-218-855-11	s	METAL, CHIP 2.2K 0.50% 1/16W
R453	1-218-855-11	s	METAL, CHIP 2.2K 0.50% 1/16W
R454	1-218-855-11	s	METAL, CHIP 2.2K 0.50% 1/16W
R455	1-216-825-11	s	METAL, CHIP 2.2K 5% 1/16W
R456	1-216-809-11	s	METAL, CHIP 100 5% 1/16W
R457	1-216-825-11	s	METAL, CHIP 2.2K 5% 1/16W
R458	1-218-851-11	s	METAL, CHIP 1.5K 0.50% 1/16W
R459	1-218-879-11	s	METAL, CHIP 22K 0.50% 1/16W
R460	1-216-821-11	s	METAL, CHIP 1K 5% 1/16W

(ES-26/26P BOARD)

Ref. No. or Q'ty	Part No.	SP	Description
R461	1-218-887-11	s	METAL, CHIP 47K 0.50% 1/16W
R462	1-216-825-11	s	METAL, CHIP 2.2K 5% 1/16W
R463	1-218-885-11	s	METAL, CHIP 39K 0.50% 1/16W
R464	1-218-883-11	s	METAL, CHIP 33K 0.50% 1/16W
R465	1-216-864-11	s	METAL, CHIP 0 5% 1/16W
R466	1-218-887-11	s	METAL, CHIP 47K 0.50% 1/16W
R467	1-216-805-11	s	METAL, CHIP 47 5% 1/16W
R468	1-216-805-11	s	METAL, CHIP 47 5% 1/16W
R471	1-216-841-11	s	METAL, CHIP 47K 5% 1/16W
R472	1-216-841-11	s	METAL, CHIP 47K 5% 1/16W
R473	1-216-829-11	s	METAL, CHIP 4.7K 5% 1/16W
R474	1-216-829-11	s	METAL, CHIP 4.7K 5% 1/16W
R475	1-211-990-11	s	METAL, CHIP 75 0.50% 1/16W
R476	1-216-825-11	s	METAL, CHIP 2.2K 5% 1/16W
R477	1-216-809-11	s	METAL, CHIP 100 5% 1/16W
R478	1-216-809-11	s	METAL, CHIP 100 5% 1/16W
R479	1-216-825-11	s	METAL, CHIP 2.2K 5% 1/16W
R480	1-216-809-11	s	METAL, CHIP 100 5% 1/16W
R481	1-216-809-11	s	METAL, CHIP 100 5% 1/16W
R482	1-216-825-11	s	METAL, CHIP 2.2K 5% 1/16W
R483	1-216-805-11	s	METAL, CHIP 47 5% 1/16W
R484	1-218-838-11	s	METAL, CHIP 430 0.50% 1/16W
R485	1-218-855-11	s	METAL, CHIP 2.2K 0.50% 1/16W
R486	1-216-813-11	s	METAL, CHIP 220 5% 1/16W
R487	1-218-847-11	s	METAL, CHIP 1K 0.50% 1/16W
R488	1-218-847-11	s	METAL, CHIP 1K 0.50% 1/16W
R489	1-216-813-11	s	METAL, CHIP 220 5% 1/16W
R490	1-211-990-11	s	METAL, CHIP 75 0.50% 1/16W
R491	1-218-847-11	s	METAL, CHIP 1K 0.50% 1/16W
R492	1-218-847-11	s	METAL, CHIP 1K 0.50% 1/16W
R493	1-211-990-11	s	METAL, CHIP 75 0.50% 1/16W
R494	1-216-809-11	s	METAL, CHIP 100 5% 1/16W
R495	1-216-809-11	s	METAL, CHIP 100 5% 1/16W
R496	1-216-840-11	s	METAL, CHIP 39K 5% 1/16W
R497	1-216-833-91	s	METAL, CHIP 10K 5% 1/16W
R498	1-216-837-11	s	METAL, CHIP 22K 5% 1/16W
R499	1-216-833-91	s	METAL, CHIP 10K 5% 1/16W
R500	1-216-841-11	s	METAL, CHIP 47K 5% 1/16W
R501	1-216-833-91	s	METAL, CHIP 10K 5% 1/16W
R502	1-216-829-11	s	METAL, CHIP 4.7K 5% 1/16W
R503	1-216-815-11	s	METAL, CHIP 330 5% 1/16W
R504	1-216-827-11	s	METAL, CHIP 3.3K 5% 1/16W
R505	1-216-809-11	s	METAL, CHIP 100 5% 1/16W
R506	1-218-847-11	s	METAL, CHIP 1K 0.50% 1/16W
R507	1-218-847-11	s	METAL, CHIP 1K 0.50% 1/16W
R508	1-216-864-11	s	METAL, CHIP 0 5% 1/16W
R509	1-211-990-11	s	METAL, CHIP 75 0.50% 1/16W
R510	1-216-815-11	s	METAL, CHIP 330 5% 1/16W
R511	1-216-827-11	s	METAL, CHIP 3.3K 5% 1/16W
R512	1-216-809-11	s	METAL, CHIP 100 5% 1/16W
R513	1-218-847-11	s	METAL, CHIP 1K 0.50% 1/16W
R514	1-218-847-11	s	METAL, CHIP 1K 0.50% 1/16W
R515	1-216-864-11	s	METAL, CHIP 0 5% 1/16W
R516	1-211-990-11	s	METAL, CHIP 75 0.50% 1/16W
R517	1-216-815-11	s	METAL, CHIP 330 5% 1/16W
R518	1-216-827-11	s	METAL, CHIP 3.3K 5% 1/16W
R519	1-216-809-11	s	METAL, CHIP 100 5% 1/16W
R520	1-218-847-11	s	METAL, CHIP 1K 0.50% 1/16W
R521	1-218-847-11	s	METAL, CHIP 1K 0.50% 1/16W

(ES-26/26P BOARD)

Ref. No. or Q'ty	Part No.	SP	Description
R522	1-216-864-11	s	METAL, CHIP 0 5% 1/16W
R523	1-211-990-11	s	METAL, CHIP 75 0.50% 1/16W
R524	1-216-827-11	s	METAL, CHIP 3.3K 5% 1/16W
R525	1-216-827-11	s	METAL, CHIP 3.3K 5% 1/16W
R526	1-216-809-11	s	METAL, CHIP 100 5% 1/16W
R527	1-216-809-11	s	METAL, CHIP 100 5% 1/16W
R528	1-216-813-11	s	METAL, CHIP 220 5% 1/16W
R529	1-216-827-11	s	METAL, CHIP 3.3K 5% 1/16W
R530	1-216-809-11	s	METAL, CHIP 100 5% 1/16W
R531	1-218-846-11	s	METAL, CHIP 910 0.50% 1/16W
R532	1-218-846-11	s	METAL, CHIP 910 0.50% 1/16W
R533	1-211-985-11	s	METAL, CHIP 47 0.50% 1/16W
R534	1-211-990-11	s	METAL, CHIP 75 0.50% 1/16W
R535	1-216-827-11	s	METAL, CHIP 3.3K 5% 1/16W
R536	1-216-827-11	s	METAL, CHIP 3.3K 5% 1/16W
R537	1-216-809-11	s	METAL, CHIP 100 5% 1/16W
R539	1-216-809-11	s	METAL, CHIP 100 5% 1/16W
R540	1-216-813-11	s	METAL, CHIP 220 5% 1/16W
R541	1-216-827-11	s	METAL, CHIP 3.3K 5% 1/16W
R542	1-216-837-11	s	METAL, CHIP 22K 5% 1/16W
R543	1-218-845-11	s	METAL, CHIP 820 0.50% 1/16W
R544	1-216-809-11	s	METAL, CHIP 100 5% 1/16W
R545	1-218-847-11	s	METAL, CHIP 1K 0.50% 1/16W
R546	1-216-864-11	s	METAL, CHIP 0 5% 1/16W
R547	1-211-990-11	s	METAL, CHIP 75 0.50% 1/16W
R548	1-211-987-11	s	METAL, CHIP 56 0.50% 1/16W
R549 *8	1-216-845-11	s	METAL, CHIP 100K 5% 1/16W
*9	1-162-916-11	s	CERAMIC, CHIP 12PF 50V
R550 *8	1-216-840-11	s	METAL, CHIP 39K 5% 1/16W
R551 *8	1-216-843-11	s	METAL, CHIP 68K 5% 1/16W
R552 *8	1-216-821-11	s	METAL, CHIP 1K 5% 1/16W
R553 *8	1-216-809-11	s	METAL, CHIP 100 5% 1/16W
R554 *8	1-216-839-11	s	METAL, CHIP 33K 5% 1/16W
R555 *8	1-216-839-11	s	METAL, CHIP 33K 5% 1/16W
R556 *8	1-216-833-91	s	METAL, CHIP 10K 5% 1/16W
R558 *8	1-216-864-11	s	METAL, CHIP 0 5% 1/16W
R559 *8	1-216-809-11	s	METAL, CHIP 100 5% 1/16W
R601	1-216-809-11	s	METAL, CHIP 100 5% 1/16W
R602	1-216-809-11	s	METAL, CHIP 100 5% 1/16W
R603	1-216-809-11	s	METAL, CHIP 100 5% 1/16W
R605	1-218-835-11	s	METAL, CHIP 330 0.50% 1/16W
R606	1-211-987-11	s	METAL, CHIP 56 0.50% 1/16W
R607	1-218-843-11	s	METAL, CHIP 680 0.50% 1/16W
R608	1-216-864-11	s	METAL, CHIP 0 5% 1/16W [for DSR-570WSP/500WSP]
R609	1-216-845-11	s	METAL, CHIP 100K 5% 1/16W
R611	1-211-991-11	s	METAL, CHIP 82 0.50% 1/16W
R612	1-218-847-11	s	METAL, CHIP 1K 0.50% 1/16W
R613	1-216-864-11	s	METAL, CHIP 0 5% 1/16W [for DSR-570WSP/500WSP]
R614	1-216-823-11	s	METAL, CHIP 1.5K 5% 1/16W
R615	1-216-823-11	s	METAL, CHIP 1.5K 5% 1/16W
R616	1-216-840-11	s	METAL, CHIP 39K 5% 1/16W
R617	1-216-833-91	s	METAL, CHIP 10K 5% 1/16W
R620	1-216-864-11	s	METAL, CHIP 0 5% 1/16W
R621	1-216-833-91	s	METAL, CHIP 10K 5% 1/16W
R622	1-216-833-91	s	METAL, CHIP 10K 5% 1/16W
R623	1-216-864-11	s	METAL, CHIP 0 5% 1/16W
R624	1-216-864-11	s	METAL, CHIP 0 5% 1/16W

(ES-26/26P BOARD)

Ref. No. or Q'ty	Part No.	SP	Description
R625	1-216-864-11	s	METAL, CHIP 0 5% 1/16W [for DSR-570WSP/500WSP]
R626	1-216-864-11	s	METAL, CHIP 0 5% 1/16W [for DSR-570WS/500WS]
R627	1-216-839-11	s	METAL, CHIP 33K 5% 1/16W
R628	1-218-847-11	s	METAL, CHIP 1K 0.50% 1/16W
R629	1-216-864-11	s	METAL, CHIP 0 5% 1/16W [for DSR-570WSP/500WSP]
R630	1-216-864-11	s	METAL, CHIP 0 5% 1/16W [for DSR-570WS/500WS]
R631	1-216-837-11	s	METAL, CHIP 22K 5% 1/16W
R632	1-218-847-11	s	METAL, CHIP 1K 0.50% 1/16W
R633	1-216-809-11	s	METAL, CHIP 100 5% 1/16W
R634	1-216-809-11	s	METAL, CHIP 100 5% 1/16W
R635	1-216-809-11	s	METAL, CHIP 100 5% 1/16W
R636	1-216-809-11	s	METAL, CHIP 100 5% 1/16W
R637	1-216-809-11	s	METAL, CHIP 100 5% 1/16W
R638	1-216-809-11	s	METAL, CHIP 100 5% 1/16W
R639	1-216-809-11	s	METAL, CHIP 100 5% 1/16W
R640	1-216-845-11	s	METAL, CHIP 100K 5% 1/16W
R641	1-216-845-11	s	METAL, CHIP 100K 5% 1/16W
R642	1-216-797-11	s	METAL, CHIP 10 5% 1/16W
R643	1-216-797-11	s	METAL, CHIP 10 5% 1/16W
R644	1-216-797-11	s	METAL, CHIP 10 5% 1/16W
R645	1-216-797-11	s	METAL, CHIP 10 5% 1/16W
R650	1-216-829-11	s	METAL, CHIP 4.7K 5% 1/16W
R651	1-216-829-11	s	METAL, CHIP 4.7K 5% 1/16W
R652	1-216-823-11	s	METAL, CHIP 1.5K 5% 1/16W
R653	1-216-838-11	s	METAL, CHIP 27K 5% 1/16W
R654	1-218-847-11	s	METAL, CHIP 1K 0.50% 1/16W
R655	1-216-836-11	s	METAL, CHIP 18K 5% 1/16W
R656	1-216-841-11	s	METAL, CHIP 47K 5% 1/16W
R657	1-218-847-11	s	METAL, CHIP 1K 0.50% 1/16W
R658	1-216-821-11	s	METAL, CHIP 1K 5% 1/16W
R659	1-216-821-11	s	METAL, CHIP 1K 5% 1/16W
R660	1-216-827-11	s	METAL, CHIP 3.3K 5% 1/16W
R661	1-216-809-11	s	METAL, CHIP 100 5% 1/16W
R662	1-216-821-11	s	METAL, CHIP 1K 5% 1/16W
R663	1-216-809-11	s	METAL, CHIP 100 5% 1/16W
R664	1-216-813-11	s	METAL, CHIP 220 5% 1/16W
R665	1-216-817-11	s	METAL, CHIP 470 5% 1/16W
R666	1-216-823-11	s	METAL, CHIP 1.5K 5% 1/16W
R667	1-216-833-91	s	METAL, CHIP 10K 5% 1/16W
R668	1-218-847-11	s	METAL, CHIP 1K 0.50% 1/16W
R669	1-218-847-11	s	METAL, CHIP 1K 0.50% 1/16W
R670	1-218-847-11	s	METAL, CHIP 1K 0.50% 1/16W
R671	1-216-809-11	s	METAL, CHIP 100 5% 1/16W
R672	1-218-847-11	s	METAL, CHIP 1K 0.50% 1/16W
R673	1-216-825-11	s	METAL, CHIP 2.2K 5% 1/16W
R674	1-216-809-11	s	METAL, CHIP 100 5% 1/16W
R678	1-211-990-11	s	METAL, CHIP 75 0.50% 1/16W
R680	1-218-847-11	s	METAL, CHIP 1K 0.50% 1/16W
R681	1-218-847-11	s	METAL, CHIP 1K 0.50% 1/16W
R682	1-216-864-11	s	METAL, CHIP 0 5% 1/16W
R683	1-218-847-11	s	METAL, CHIP 1K 0.50% 1/16W
R684	1-218-847-11	s	METAL, CHIP 1K 0.50% 1/16W
R685	1-216-864-11	s	METAL, CHIP 0 5% 1/16W
R686	1-216-833-91	s	METAL, CHIP 10K 5% 1/16W

(ES-26/26P BOARD)

Ref. No. or Q'ty	Part No.	SP	Description
R687	1-218-847-11	s	METAL, CHIP 1K 0.50% 1/16W [for DSR-570WS/500WS]
	1-218-846-11	s	METAL, CHIP 910 0.50% 1/16W [for DSR-570WSP/500WSP]
R688	1-218-847-11	s	METAL, CHIP 1K 0.50% 1/16W
R689	1-218-847-11	s	METAL, CHIP 1K 0.50% 1/16W
R690	1-218-847-11	s	METAL, CHIP 1K 0.50% 1/16W
R691	1-216-833-91	s	METAL, CHIP 10K 5% 1/16W
R692	1-211-990-11	s	METAL, CHIP 75 0.50% 1/16W
R701	1-216-809-11	s	METAL, CHIP 100 5% 1/16W
R702	1-216-825-11	s	METAL, CHIP 2.2K 5% 1/16W
R703	1-216-825-11	s	METAL, CHIP 2.2K 5% 1/16W
R704	1-216-809-11	s	METAL, CHIP 100 5% 1/16W
R705	1-218-847-11	s	METAL, CHIP 1K 0.50% 1/16W
R706	1-218-847-11	s	METAL, CHIP 1K 0.50% 1/16W
R707	1-216-864-11	s	METAL, CHIP 0 5% 1/16W
R708	1-216-864-11	s	METAL, CHIP 0 5% 1/16W
R709	1-216-825-11	s	METAL, CHIP 2.2K 5% 1/16W
R710	1-216-835-11	s	METAL, CHIP 15K 5% 1/16W
R711	1-216-864-11	s	METAL, CHIP 0 5% 1/16W
R712	1-216-833-91	s	METAL, CHIP 10K 5% 1/16W
R713	1-216-864-11	s	METAL, CHIP 0 5% 1/16W
R714	1-218-867-11	s	METAL, CHIP 6.8K 0.50% 1/16W
R715	1-218-867-11	s	METAL, CHIP 6.8K 0.50% 1/16W
R716	1-216-857-11	s	METAL, CHIP 1M 5% 1/16W
R717	1-216-857-11	s	METAL, CHIP 1M 5% 1/16W
R718	1-216-857-11	s	METAL, CHIP 1M 5% 1/16W
R719	1-216-857-11	s	METAL, CHIP 1M 5% 1/16W
R720	1-218-823-11	s	METAL, CHIP 100 0.50% 1/16W
R721	1-218-851-11	s	METAL, CHIP 1.5K 0.50% 1/16W
R722	1-218-847-11	s	METAL, CHIP 1K 0.50% 1/16W
R723	1-218-847-11	s	METAL, CHIP 1K 0.50% 1/16W
R724	1-218-855-11	s	METAL, CHIP 2.2K 0.50% 1/16W
R801	1-216-809-11	s	METAL, CHIP 100 5% 1/16W
R802	1-216-822-11	s	METAL, CHIP 1.2K 5% 1/16W
R803	1-216-829-11	s	METAL, CHIP 4.7K 5% 1/16W
R804	1-218-853-11	s	METAL, CHIP 1.8K 0.50% 1/16W
R805	1-218-859-11	s	METAL, CHIP 3.3K 0.50% 1/16W
R806	1-218-848-11	s	METAL, CHIP 1.1K 0.50% 1/16W
R807	1-216-845-11	s	METAL, CHIP 100K 5% 1/16W
R808	1-216-821-11	s	METAL, CHIP 1K 5% 1/16W
R809	1-216-825-11	s	METAL, CHIP 2.2K 5% 1/16W
R810	1-216-836-11	s	METAL, CHIP 18K 5% 1/16W
R811	1-216-829-11	s	METAL, CHIP 4.7K 5% 1/16W
R812	1-216-821-11	s	METAL, CHIP 1K 5% 1/16W
R813	1-216-815-11	s	METAL, CHIP 330 5% 1/16W
R814	1-216-827-11	s	METAL, CHIP 3.3K 5% 1/16W
R815	1-216-848-11	s	METAL, CHIP 180K 5% 1/16W
R816	1-216-822-11	s	METAL, CHIP 1.2K 5% 1/16W
R817	1-216-823-11	s	METAL, CHIP 1.5K 5% 1/16W [for DSR-570WS/500WS]
	1-216-827-11	s	METAL, CHIP 3.3K 5% 1/16W [for DSR-570WSP/500WSP]
R818	1-216-826-11	s	METAL, CHIP 2.7K 5% 1/16W
R819	1-216-833-91	s	METAL, CHIP 10K 5% 1/16W
R820	1-216-837-11	s	METAL, CHIP 22K 5% 1/16W
R821	1-216-827-11	s	METAL, CHIP 3.3K 5% 1/16W
R822	1-216-823-11	s	METAL, CHIP 1.5K 5% 1/16W
R823	1-218-895-11	s	METAL, CHIP 100K 0.50% 1/16W
R824	1-218-831-11	s	METAL, CHIP 220 0.50% 1/16W

(ES-26/26P BOARD)

Ref. No. or Q'ty	Part No.	SP	Description
R825	1-216-829-11	s	METAL, CHIP 4.7K 5% 1/16W
R826	1-216-845-11	s	METAL, CHIP 100K 5% 1/16W
R827	1-216-821-11	s	METAL, CHIP 1K 5% 1/16W
R828	1-218-866-11	s	METAL, CHIP 6.2K 0.50% 1/16W
R829	1-216-848-11	s	METAL, CHIP 180K 5% 1/16W
R830	1-216-825-11	s	METAL, CHIP 2.2K 5% 1/16W
R831	1-218-867-11	s	METAL, CHIP 6.8K 0.50% 1/16W
R832	1-218-863-11	s	METAL, CHIP 4.7K 0.50% 1/16W
R833	1-216-857-11	s	METAL, CHIP 1M 5% 1/16W
R834	1-218-863-11	s	METAL, CHIP 4.7K 0.50% 1/16W
R835	1-216-821-11	s	METAL, CHIP 1K 5% 1/16W
R836	1-218-865-11	s	METAL, CHIP 5.6K 0.50% 1/16W
R837	1-216-833-91	s	METAL, CHIP 10K 5% 1/16W
R838	1-216-829-11	s	METAL, CHIP 4.7K 5% 1/16W
R839	1-216-809-11	s	METAL, CHIP 100 5% 1/16W
R840	1-216-864-11	s	METAL, CHIP 0 5% 1/16W [for DSR-570WS/500WS]
R841	1-216-864-11	s	METAL, CHIP 0 5% 1/16W
R842	1-216-864-11	s	METAL, CHIP 0 5% 1/16W [for DSR-570WSP/500WSP]
R843	1-216-821-11	s	METAL, CHIP 1K 5% 1/16W
R844	1-218-865-11	s	METAL, CHIP 5.6K 0.50% 1/16W
R845	1-216-827-11	s	METAL, CHIP 3.3K 5% 1/16W
R846	1-216-825-11	s	METAL, CHIP 2.2K 5% 1/16W
R847	1-218-867-11	s	METAL, CHIP 6.8K 0.50% 1/16W
R848	1-218-883-11	s	METAL, CHIP 33K 0.50% 1/16W
R849	1-216-845-11	s	METAL, CHIP 100K 5% 1/16W
R850	1-218-883-11	s	METAL, CHIP 33K 0.50% 1/16W [for DSR-570WS/500WS]
R851	1-218-879-11	s	METAL, CHIP 22K 0.50% 1/16W [for DSR-570WS/500WS]
R852	1-218-879-11	s	METAL, CHIP 22K 0.50% 1/16W [for DSR-570WS/500WS]
R853	1-218-854-11	s	METAL, CHIP 2K 0.50% 1/16W
R854	1-216-826-11	s	METAL, CHIP 2.7K 5% 1/16W [for DSR-570WSP/500WSP]
R855	1-216-864-11	s	METAL, CHIP 0 5% 1/16W [for DSR-570WSP/500WSP]
R856	1-216-826-11	s	METAL, CHIP 2.7K 5% 1/16W [for DSR-570WSP/500WSP]
R859	1-216-833-91	s	METAL, CHIP 10K 5% 1/16W
R861	1-216-864-11	s	METAL, CHIP 0 5% 1/16W
R862	1-216-821-11	s	METAL, CHIP 1K 5% 1/16W
R863	1-216-864-11	s	METAL, CHIP 0 5% 1/16W [for DSR-570WSP/500WSP]
R864	1-216-864-11	s	METAL, CHIP 0 5% 1/16W [for DSR-570WS/500WS]
R865	1-216-864-11	s	METAL, CHIP 0 5% 1/16W [for DSR-570WSP/500WSP]
R866	1-216-864-11	s	METAL, CHIP 0 5% 1/16W
R867	1-216-864-11	s	METAL, CHIP 0 5% 1/16W [for DSR-570WS/500WS]
R868	1-216-857-11	s	METAL, CHIP 1M 5% 1/16W
R869	1-216-857-11	s	METAL, CHIP 1M 5% 1/16W
R870	1-216-864-11	s	METAL, CHIP 0 5% 1/16W [for DSR-570WSP/500WSP]
R871	1-216-864-11	s	METAL, CHIP 0 5% 1/16W
R872	1-216-864-11	s	METAL, CHIP 0 5% 1/16W
R873	1-216-821-11	s	METAL, CHIP 1K 5% 1/16W
R874	1-218-865-11	s	METAL, CHIP 5.6K 0.50% 1/16W
R875	1-216-821-11	s	METAL, CHIP 1K 5% 1/16W

(ES-26/26P BOARD)

Ref. No. or Q'ty	Part No.	SP	Description
R876	1-216-821-11	s	METAL, CHIP 1K 5% 1/16W
R877	1-216-827-11	s	METAL, CHIP 3.3K 5% 1/16W
R878	1-218-839-11	s	METAL, CHIP 470 0.50% 1/16W
R879	1-216-797-11	s	METAL, CHIP 10 5% 1/16W
R880	1-216-821-11	s	METAL, CHIP 1K 5% 1/16W
R881	1-216-797-11	s	METAL, CHIP 10 5% 1/16W
R882	1-218-882-11	s	METAL, CHIP 30K 0.50% 1/16W
R883	1-218-881-11	s	METAL, CHIP 27K 0.50% 1/16W
R884	1-216-833-91	s	METAL, CHIP 10K 5% 1/16W
R885	1-216-809-11	s	METAL, CHIP 100 5% 1/16W
R886	1-216-825-11	s	METAL, CHIP 2.2K 5% 1/16W
R887	1-216-821-11	s	METAL, CHIP 1K 5% 1/16W
R888 *1	1-216-864-11	s	METAL, CHIP 0 5% 1/16W
R889	1-216-821-11	s	METAL, CHIP 1K 5% 1/16W
R890	1-216-864-11	s	METAL, CHIP 0 5% 1/16W
R891 *2	1-218-871-11	s	METAL, CHIP 10K 0.50% 1/16W
*3	1-218-866-11	s	METAL, CHIP 6.2K 0.50% 1/16W
R892	1-218-883-11	s	METAL, CHIP 33K 0.50% 1/16W
R893	1-218-879-11	s	METAL, CHIP 22K 0.50% 1/16W
R894	1-218-871-11	s	METAL, CHIP 10K 0.50% 1/16W
R895	1-218-883-11	s	METAL, CHIP 33K 0.50% 1/16W
R896	1-218-879-11	s	METAL, CHIP 22K 0.50% 1/16W
R897	1-216-833-91	s	METAL, CHIP 10K 5% 1/16W
R898	1-216-809-11	s	METAL, CHIP 100 5% 1/16W
R899	1-216-821-11	s	METAL, CHIP 1K 5% 1/16W
R900	1-216-825-11	s	METAL, CHIP 2.2K 5% 1/16W
R902	1-216-833-91	s	METAL, CHIP 10K 5% 1/16W
R903	1-216-835-11	s	METAL, CHIP 15K 5% 1/16W
R904	1-216-809-11	s	METAL, CHIP 100 5% 1/16W
R905	1-218-856-11	s	METAL, CHIP 2.4K 0.50% 1/16W
R906	1-218-872-11	s	METAL, CHIP 11K 0.50% 1/16W
R907	1-218-874-11	s	METAL, CHIP 13K 0.50% 1/16W
R908	1-216-835-11	s	METAL, CHIP 15K 5% 1/16W
R909	1-216-833-91	s	METAL, CHIP 10K 5% 1/16W
R910	1-216-833-91	s	METAL, CHIP 10K 5% 1/16W
R911	1-216-825-11	s	METAL, CHIP 2.2K 5% 1/16W
R912	1-216-821-11	s	METAL, CHIP 1K 5% 1/16W
R913	1-216-825-11	s	METAL, CHIP 2.2K 5% 1/16W
R915	1-216-825-11	s	METAL, CHIP 2.2K 5% 1/16W
R916	1-216-809-11	s	METAL, CHIP 100 5% 1/16W
R917	1-216-821-11	s	METAL, CHIP 1K 5% 1/16W
R919	1-218-823-11	s	METAL, CHIP 100 0.50% 1/16W [for DSR-570WS/500WS]
R921	1-216-805-11	s	METAL, CHIP 47 5% 1/16W [for DSR-570WS/500WS]
R922	1-218-839-11	s	METAL, CHIP 470 0.50% 1/16W
R923	1-216-805-11	s	METAL, CHIP 47 5% 1/16W [for DSR-570WS/500WS]
R924	1-216-805-11	s	METAL, CHIP 47 5% 1/16W [for DSR-570WSP/500WSP]
R925	1-216-809-11	s	METAL, CHIP 100 5% 1/16W
R926	1-216-864-11	s	METAL, CHIP 0 5% 1/16W
R927	1-216-845-11	s	METAL, CHIP 100K 5% 1/16W
R928	1-216-805-11	s	METAL, CHIP 47 5% 1/16W [for DSR-570WS/500WS]
R929	1-216-805-11	s	METAL, CHIP 47 5% 1/16W
R930	1-216-864-11	s	METAL, CHIP 0 5% 1/16W [for DSR-570WS/500WS]
R931	1-216-864-11	s	METAL, CHIP 0 5% 1/16W [for DSR-570WSP/500WSP]

(ES-26/26P BOARD)

Ref. No. or Q'ty	Part No.	SP	Description
R932	1-216-828-11	s	METAL, CHIP 3.9K 5% 1/16W
R933	1-216-828-11	s	METAL, CHIP 3.9K 5% 1/16W
R934	1-216-828-11	s	METAL, CHIP 3.9K 5% 1/16W
R935	1-216-828-11	s	METAL, CHIP 3.9K 5% 1/16W
RB101	1-236-904-11	s	RESISTOR BLOCK, CHIP 1KX4
RB102	1-236-904-11	s	RESISTOR BLOCK, CHIP 1KX4
RB103	1-236-907-11	s	RESISTOR BLOCK, CHIP 100KX4
RB104	1-236-907-11	s	RESISTOR BLOCK, CHIP 100KX4
RB601	1-236-907-11	s	RESISTOR BLOCK, CHIP 100KX4
RV101	1-241-261-41	s	RES, ADJ, METAL 1K
RV103	1-241-261-41	s	RES, ADJ, METAL 1K
RV104	1-241-260-11	s	RES, ADJ, METAL 500
S401	1-571-275-11	s	SWITCH, SLIDE

FP-118 BOARD

Ref. No. or Q'ty	Part No.	SP	Description
1pc	A-8322-152-A	o	MOUNTED CIRCUIT BOARD, FP-118
1pc	3-604-372-01	o	SPACER LCD
C1	1-126-394-11	s	ELECT, CHIP 10uF 20% 16V
C2	1-164-156-11	s	CERAMIC, CHIP 0.1uF 25V
C3	1-164-156-11	s	CERAMIC, CHIP 0.1uF 25V
C4	1-164-156-11	s	CERAMIC, CHIP 0.1uF 25V
C5	1-126-394-11	s	ELECT, CHIP 10uF 20% 16V
C7	1-126-394-11	s	ELECT, CHIP 10uF 20% 16V
C8	1-126-394-11	s	ELECT, CHIP 10uF 20% 16V
C9	1-164-156-11	s	CERAMIC, CHIP 0.1uF 25V
C10	1-164-315-11	s	CERAMIC, CHIP 470PF 5% 50V
C11	1-162-912-11	s	CERAMIC, CHIP 7PF 50V
C12	1-164-315-11	s	CERAMIC, CHIP 470PF 5% 50V
C13	1-162-912-11	s	CERAMIC, CHIP 7PF 50V
C14	1-162-912-11	s	CERAMIC, CHIP 7PF 50V
C15	1-164-156-11	s	CERAMIC, CHIP 0.1uF 25V
C16	1-164-156-11	s	CERAMIC, CHIP 0.1uF 25V
C17	1-162-912-11	s	CERAMIC, CHIP 7PF 50V
C18	1-126-394-11	s	ELECT, CHIP 10uF 20% 16V
C19	1-126-394-11	s	ELECT, CHIP 10uF 20% 16V
C20	1-164-156-11	s	CERAMIC, CHIP 0.1uF 25V
C21	1-164-156-11	s	CERAMIC, CHIP 0.1uF 25V
C200	1-164-156-11	s	CERAMIC, CHIP 0.1uF 25V
C201	1-126-394-11	s	ELECT, CHIP 10uF 20% 16V
C202	1-164-156-11	s	CERAMIC, CHIP 0.1uF 25V
C203	1-126-394-11	s	ELECT, CHIP 10uF 20% 16V
C204	1-162-918-11	s	CERAMIC, CHIP 18PF 5% 50V
C205	1-162-917-11	s	CERAMIC, CHIP 15PF 5% 50V
C206	1-162-918-11	s	CERAMIC, CHIP 18PF 5% 50V
C207	1-164-156-11	s	CERAMIC, CHIP 0.1uF 25V
C208	1-126-394-11	s	ELECT, CHIP 10uF 20% 16V
C209	1-126-397-11	s	ELECT, CHIP 33uF 20% 25V
C210	1-126-397-11	s	ELECT, CHIP 33uF 20% 25V
C211	1-164-156-11	s	CERAMIC, CHIP 0.1uF 25V
C212	1-164-156-11	s	CERAMIC, CHIP 0.1uF 25V
C213	1-164-739-11	s	CERAMIC, CHIP 560PF 5% 50V
C214	1-164-156-11	s	CERAMIC, CHIP 0.1uF 25V
C215	1-126-394-11	s	ELECT, CHIP 10uF 20% 16V
C216	1-164-315-11	s	CERAMIC, CHIP 470PF 5% 50V
C217	1-164-156-11	s	CERAMIC, CHIP 0.1uF 25V
C218	1-162-919-11	s	CERAMIC, CHIP 22PF 5% 50V
C219	1-162-919-11	s	CERAMIC, CHIP 22PF 5% 50V
C220	1-164-156-11	s	CERAMIC, CHIP 0.1uF 25V
C221	1-164-156-11	s	CERAMIC, CHIP 0.1uF 25V
C222	1-164-156-11	s	CERAMIC, CHIP 0.1uF 25V
C223	1-165-112-11	s	CERAMIC, CHIP 0.33uF 16V
C224	1-113-642-11	s	TANTALUM, CHIP 47uF 20% 10V
C225	1-164-730-11	s	CERAMIC 0.0012uF 5% 50V
C226	1-164-156-11	s	CERAMIC, CHIP 0.1uF 25V
C227	1-164-156-11	s	CERAMIC, CHIP 0.1uF 25V
C228	1-113-642-11	s	TANTALUM, CHIP 47uF 20% 10V
C229	1-164-156-11	s	CERAMIC, CHIP 0.1uF 25V
C300	1-164-156-11	s	CERAMIC, CHIP 0.1uF 25V
C301	1-126-394-11	s	ELECT, CHIP 10uF 20% 16V
C302	1-164-156-11	s	CERAMIC, CHIP 0.1uF 25V
C303	1-164-156-11	s	CERAMIC, CHIP 0.1uF 25V
C304	1-126-394-11	s	ELECT, CHIP 10uF 20% 16V
C305	1-126-392-11	s	ELECT, CHIP 100uF 20% 6.3V

(FP-118 BOARD)

Ref. No. or Q'ty	Part No.	SP	Description
C306	1-126-394-11	s	ELECT, CHIP 10uF 20% 16V
C307	1-126-402-11	s	ELECT, CHIP 2.2uF 20% 50V
C308	1-164-156-11	s	CERAMIC, CHIP 0.1uF 25V
C309	1-126-402-11	s	ELECT, CHIP 2.2uF 20% 50V
C310	1-164-227-11	s	CERAMIC, CHIP 0.022uF 10% 25V
C311	1-162-970-11	s	CERAMIC, CHIP 0.01uF 10% 25V
C312	1-126-395-11	s	ELECT 22uF 20% 16V
C313	1-164-227-11	s	CERAMIC, CHIP 0.022uF 10% 25V
C314	1-164-227-11	s	CERAMIC, CHIP 0.022uF 10% 25V
C315	1-164-156-11	s	CERAMIC, CHIP 0.1uF 25V
C316	1-164-156-11	s	CERAMIC, CHIP 0.1uF 25V
C317	1-164-156-11	s	CERAMIC, CHIP 0.1uF 25V
C318	1-164-315-11	s	CERAMIC, CHIP 470PF 5% 50V
C401	1-162-915-11	s	CERAMIC, CHIP 10PF 50V
C402	1-162-915-11	s	CERAMIC, CHIP 10PF 50V
C403	1-162-915-11	s	CERAMIC, CHIP 10PF 50V
C404	1-162-915-11	s	CERAMIC, CHIP 10PF 50V
C405	1-164-227-11	s	CERAMIC, CHIP 0.022uF 10% 25V
C406	1-164-227-11	s	CERAMIC, CHIP 0.022uF 10% 25V
C407	1-164-227-11	s	CERAMIC, CHIP 0.022uF 10% 25V
C408	1-164-227-11	s	CERAMIC, CHIP 0.022uF 10% 25V
C409	1-113-500-11	s	TANTALUM 100uF 20% 10V
C410	1-113-500-11	s	TANTALUM 100uF 20% 10V
C411	1-162-915-11	s	CERAMIC, CHIP 10PF 50V
C412	1-162-915-11	s	CERAMIC, CHIP 10PF 50V
C413	1-162-964-11	s	CERAMIC, CHIP 0.001uF 10% 50V
C414	1-164-227-11	s	CERAMIC, CHIP 0.022uF 10% 25V
C415	1-164-227-11	s	CERAMIC, CHIP 0.022uF 10% 25V
C416	1-164-227-11	s	CERAMIC, CHIP 0.022uF 10% 25V
C417	1-164-227-11	s	CERAMIC, CHIP 0.022uF 10% 25V
C418	1-162-964-11	s	CERAMIC, CHIP 0.001uF 10% 50V
C419	1-162-915-11	s	CERAMIC, CHIP 10PF 50V
C420	1-162-915-11	s	CERAMIC, CHIP 10PF 50V
C421	1-164-156-11	s	CERAMIC, CHIP 0.1uF 25V
C422	1-113-500-11	s	TANTALUM 100uF 20% 10V
C423	1-162-921-11	s	CERAMIC, CHIP 33PF 5% 50V
C424	1-162-921-11	s	CERAMIC, CHIP 33PF 5% 50V
C425	1-113-642-11	s	TANTALUM, CHIP 47uF 20% 10V
C426	1-113-642-11	s	TANTALUM, CHIP 47uF 20% 10V
C427	1-164-156-11	s	CERAMIC, CHIP 0.1uF 25V
C428	1-126-394-11	s	ELECT, CHIP 10uF 20% 16V
C429	1-126-394-11	s	ELECT, CHIP 10uF 20% 16V
C430	1-162-923-11	s	CERAMIC, CHIP 47PF 5% 50V
C431	1-162-923-11	s	CERAMIC, CHIP 47PF 5% 50V
C434	1-104-851-11	s	TANTALUM, CHIP 10uF 20% 10V
C435	1-104-851-11	s	TANTALUM, CHIP 10uF 20% 10V
C436	1-135-210-11	s	TANTALUM, CHIP 4.7uF 20% 10V
C437	1-135-210-11	s	TANTALUM, CHIP 4.7uF 20% 10V
C438	1-104-851-11	s	TANTALUM, CHIP 10uF 20% 10V
C439	1-104-851-11	s	TANTALUM, CHIP 10uF 20% 10V
C440	1-113-642-11	s	TANTALUM, CHIP 47uF 20% 10V
C441	1-113-642-11	s	TANTALUM, CHIP 47uF 20% 10V
C442	1-126-393-11	s	ELECT, CHIP 33uF 20% 10V
C443	1-113-500-11	s	TANTALUM 100uF 20% 10V
C444	1-113-500-11	s	TANTALUM 100uF 20% 10V
C445	1-115-154-11	s	ELECT 10uF 20% 16V
C446	1-115-154-11	s	ELECT 10uF 20% 16V
C447	1-164-227-11	s	CERAMIC, CHIP 0.022uF 10% 25V
C448	1-164-227-11	s	CERAMIC, CHIP 0.022uF 10% 25V

(FP-118 BOARD)

Ref. No. or Q'ty	Part No.	SP	Description
C449	1-164-227-11	s	CERAMIC, CHIP 0.022uF 10% 25V
C451	1-164-227-11	s	CERAMIC, CHIP 0.022uF 10% 25V
C453	1-164-227-11	s	CERAMIC, CHIP 0.022uF 10% 25V
C454	1-164-227-11	s	CERAMIC, CHIP 0.022uF 10% 25V
C455	1-164-227-11	s	CERAMIC, CHIP 0.022uF 10% 25V
C456	1-164-227-11	s	CERAMIC, CHIP 0.022uF 10% 25V
C457	1-164-227-11	s	CERAMIC, CHIP 0.022uF 10% 25V
C601	1-162-915-11	s	CERAMIC, CHIP 10PF 50V
C602	1-162-915-11	s	CERAMIC, CHIP 10PF 50V
C603	1-162-915-11	s	CERAMIC, CHIP 10PF 50V
C604	1-162-915-11	s	CERAMIC, CHIP 10PF 50V
C605	1-162-915-11	s	CERAMIC, CHIP 10PF 50V
C606	1-113-682-11	s	TANTALUM, CHIP 33uF 20% 10V
C607	1-113-682-11	s	TANTALUM, CHIP 33uF 20% 10V
C608	1-162-915-11	s	CERAMIC, CHIP 10PF 50V
C609	1-104-852-11	s	TANTALUM, CHIP 22uF 20% 10V
C610	1-113-500-11	s	TANTALUM 100uF 20% 10V
C611	1-164-227-11	s	CERAMIC, CHIP 0.022uF 10% 25V
C613	1-164-156-11	s	CERAMIC, CHIP 0.1uF 25V
C614	1-126-393-11	s	ELECT, CHIP 33uF 20% 10V
C615	1-164-156-11	s	CERAMIC, CHIP 0.1uF 25V
C616	1-126-393-11	s	ELECT, CHIP 33uF 20% 10V
C617	1-113-642-11	s	TANTALUM, CHIP 47uF 20% 10V
C618	1-126-395-11	s	ELECT 22uF 20% 16V
C619	1-126-412-11	s	ELECT, CHIP 220uF 20% 4V
C620	1-165-176-11	s	CERAMIC, CHIP 0.047uF 10% 16V
C621	1-113-500-11	s	TANTALUM 100uF 20% 10V
C622	1-113-500-11	s	TANTALUM 100uF 20% 10V
C623	1-126-394-11	s	ELECT, CHIP 10uF 20% 16V
C624	1-164-346-11	s	CERAMIC 1uF 16V
C625	1-164-156-11	s	CERAMIC, CHIP 0.1uF 25V
C706	1-126-394-11	s	ELECT, CHIP 10uF 20% 16V
C707	1-126-394-11	s	ELECT, CHIP 10uF 20% 16V
C718	1-164-156-11	s	CERAMIC, CHIP 0.1uF 25V
C719	1-164-156-11	s	CERAMIC, CHIP 0.1uF 25V
C801	1-126-394-11	s	ELECT, CHIP 10uF 20% 16V
C802	1-162-970-11	s	CERAMIC, CHIP 0.01uF 10% 25V
C804	1-162-970-11	s	CERAMIC, CHIP 0.01uF 10% 25V
C806	1-113-500-11	s	TANTALUM 100uF 20% 10V
C807	1-113-500-11	s	TANTALUM 100uF 20% 10V
CN1	1-778-652-11	o	CONNECTOR, FFC (ZIF) 50P
CN2	1-778-652-11	o	CONNECTOR, FFC (ZIF) 50P
CN3	1-778-651-11	o	CONNECTOR, FFC (ZIF) 40P
CN4	1-695-931-21	o	CONNECTOR, FPC 10P
CN5	1-580-056-21	o	PIN, CONNECTOR (SMD) 3P
CN6	1-580-056-21	o	PIN, CONNECTOR (SMD) 3P
CN8	1-695-931-21	o	CONNECTOR, FPC 10P
CV200	1-141-345-11	s	CAP, TRIMMER 40PF
D1	8-719-059-49	s	DIODE EBR3368S
D200	8-719-938-72	s	DIODE SB01-05CP
D201	8-719-106-31	s	DIODE RD8.2M-B1
D202	8-719-105-90	s	DIODE RD5.6M-B1
D203	8-719-106-61	s	DIODE RD11M-B1
D204	8-719-105-90	s	DIODE RD5.6M-B1
D205	8-719-059-52	s	DIODE MA3J14300LSO
D206	8-719-059-52	s	DIODE MA3J14300LSO
D207	8-719-105-28	s	DIODE RD2.4M-B
D208	8-719-105-28	s	DIODE RD2.4M-B

(FP-118 BOARD)

Ref. No. or Q'ty	Part No.	SP	Description
D209	8-719-987-41	s	DIODE CL-150Y-CD
D210	8-719-987-41	s	DIODE CL-150Y-CD
D211	8-719-987-41	s	DIODE CL-150Y-CD
D212	8-719-987-41	s	DIODE CL-150Y-CD
D213	8-719-987-41	s	DIODE CL-150Y-CD
D214	8-719-987-41	s	DIODE CL-150Y-CD
D215	8-719-987-41	s	DIODE CL-150Y-CD
D216	8-719-987-41	s	DIODE CL-150Y-CD
D217	8-719-820-41	s	DIODE 1SS302
D300	8-719-938-72	s	DIODE SB01-05CP
D301	8-719-938-72	s	DIODE SB01-05CP
D302	8-719-938-72	s	DIODE SB01-05CP
D303	8-719-059-51	s	DIODE MA3J142E0LSO
D401	8-719-059-52	s	DIODE MA3J14300LSO
D402	8-719-059-52	s	DIODE MA3J14300LSO
D501	8-719-059-52	s	DIODE MA3J14300LSO
D502	8-719-404-35	s	DIODE MA141WK
D503	8-719-404-35	s	DIODE MA141WK
D504	8-719-404-35	s	DIODE MA141WK
D605	8-719-820-41	s	DIODE 1SS302
D703	8-719-820-41	s	DIODE 1SS302
D704	8-719-820-41	s	DIODE 1SS302
D801	8-719-941-86	s	DIODE DAN202U
F801	1-576-122-21	s	LINK, IC
FB801	1-414-135-11	s	FERRITE 0uH
IC2	8-759-327-65	s	IC CXD8525N-E2
IC4	8-759-674-43	s	IC MM74HCT244SJX
IC6	8-759-524-04	s	IC TC74VHC125FT(EL)
IC200	8-759-643-27	s	IC UPD78064GF-146-3BA
IC201	8-759-175-77	s	IC CXD8384Q
IC202	8-759-289-80	s	IC LC75821W-DS
IC203	8-759-442-54	s	IC RH5RL50AA-T1
IC204	8-759-464-95	s	IC AK6420AF-E2
IC205	8-759-035-93	s	IC TC7S32F
IC206	8-759-209-57	s	IC TC4S69F
IC207	8-759-669-45	s	IC TL062CPWR-12
IC208	8-759-745-64	s	IC NJM4560M
IC209	8-759-082-60	s	IC TC7S66FU
IC210	8-759-058-64	s	IC TC7S32FU(TE85R)
IC300	8-759-087-73	s	IC S-80750AN-D9-S
IC301	8-759-504-40	s	IC S-80741AL-A5-T1
IC302	8-759-442-54	s	IC RH5RL50AA-T1
IC303	8-759-442-54	s	IC RH5RL50AA-T1
IC401	8-759-422-21	s	IC NJM4580V(TE2)
IC403	8-759-422-21	s	IC NJM4580V(TE2)
IC404	8-759-422-21	s	IC NJM4580V(TE2)
IC405	8-759-422-21	s	IC NJM4580V(TE2)
IC406	8-759-082-61	s	IC TC4W53FU
IC407	8-759-082-61	s	IC TC4W53FU
IC408	8-759-701-01	s	IC NJM2904M
IC409	8-759-111-56	s	IC UPC4572G2
IC410	8-759-111-56	s	IC UPC4572G2
IC411	8-759-422-21	s	IC NJM4580V(TE2)
IC412	8-759-422-21	s	IC NJM4580V(TE2)
IC413	8-759-422-21	s	IC NJM4580V(TE2)
IC414	8-759-422-21	s	IC NJM4580V(TE2)
IC415	8-759-431-95	s	IC S-81230SGUP-DQB-T1

(FP-118 BOARD)

Ref. No. or Q'ty	Part No.	SP	Description
IC416	8-759-422-21	s	IC NJM4580V(TE2)
IC601	8-759-745-64	s	IC NJM4560M
IC602	8-759-745-64	s	IC NJM4560M
IC605	8-759-530-28	s	IC TC4066BFT(EL,N)
IC606	8-759-745-64	s	IC NJM4560M
IC607	8-759-431-97	s	IC NJM386M(TE2)
IC701	8-759-710-77	s	IC NJM4560MD
IC705	8-759-530-05	s	IC TC4053BFT(EL,N)
IC801	8-759-058-62	s	IC TC7S08FU(TE85R)
IC802	8-759-058-58	s	IC TC7S04FU(TE85R)
IC803	8-759-926-25	s	IC SN74HC165ANS
IC804	8-759-926-25	s	IC SN74HC165ANS
L1	1-410-381-11	s	INDUCTOR, CHIP 10uH
L2	1-410-381-11	s	INDUCTOR, CHIP 10uH
L3	1-410-381-11	s	INDUCTOR, CHIP 10uH
L200	1-410-393-11	s	INDUCTOR, CHIP 100uH
L300	1-410-381-11	s	INDUCTOR, CHIP 10uH
L301	1-410-381-11	s	INDUCTOR, CHIP 10uH
L501	1-412-282-41	s	INDUCTOR, CHIP 470UH
L601	1-414-402-11	s	INDUCTOR 47uH
L701	1-412-955-11	s	INDUCTOR 22uH
LI300	1-550-414-31	s	HOLDER, BATTERY
ND200	1-801-621-21	o	DISPLAY, LCD
PH401	1-808-252-11	s	PHOTOCOUPLER M-30
Q1	8-729-106-60	s	TRANSISTOR 2SB1115A
Q2	8-729-042-52	s	TRANSISTOR IMT1AT108
Q3	8-729-029-14	s	TRANSISTOR DTC144EUA-T106
Q4	8-729-028-91	s	TRANSISTOR DTA144EUA-T106
Q5	8-729-028-91	s	TRANSISTOR DTA144EUA-T106
Q6	8-729-929-73	s	TRANSISTOR UMG8-TR
Q7	8-729-029-14	s	TRANSISTOR DTC144EUA-T106
Q8	8-729-929-73	s	TRANSISTOR UMG8-TR
Q9	8-729-929-52	s	TRANSISTOR UMA9-TR
Q10	8-729-927-74	s	TRANSISTOR UMG2
Q11	8-729-028-73	s	TRANSISTOR DTA114EUA-T106
Q12	8-729-029-14	s	TRANSISTOR DTC144EUA-T106
Q13	8-729-029-14	s	TRANSISTOR DTC144EUA-T106
Q201	8-729-029-14	s	TRANSISTOR DTC144EUA-T106
Q202	8-729-029-14	s	TRANSISTOR DTC144EUA-T106
Q203	8-729-905-35	s	TRANSISTOR 2SC4081-R
Q204	8-729-905-35	s	TRANSISTOR 2SC4081-R
Q205	8-729-028-91	s	TRANSISTOR DTA144EUA-T106
Q300	8-729-029-14	s	TRANSISTOR DTC144EUA-T106
Q301	8-729-029-14	s	TRANSISTOR DTC144EUA-T106
Q302	8-729-026-53	s	TRANSISTOR 2SA1576A-T106-QR
Q303	8-729-142-90	s	TRANSISTOR 2SK853-K5
Q304	8-729-042-52	s	TRANSISTOR IMT1AT108
Q305	8-729-905-35	s	TRANSISTOR 2SC4081-R
Q306	8-729-907-26	s	TRANSISTOR IMX1
Q307	8-729-042-52	s	TRANSISTOR IMT1AT108
Q308	8-729-029-14	s	TRANSISTOR DTC144EUA-T106
Q401	8-729-014-86	s	TRANSISTOR 2SC4207-YGRTE85L
Q402	8-729-014-86	s	TRANSISTOR 2SC4207-YGRTE85L
Q403	8-729-905-35	s	TRANSISTOR 2SC4081-R
Q404	8-729-026-53	s	TRANSISTOR 2SA1576A-T106-QR
Q405	8-729-026-53	s	TRANSISTOR 2SA1576A-T106-QR

(FP-118 BOARD)

Ref. No. or Q'ty	Part No.	SP	Description
Q406	8-729-905-35	s	TRANSISTOR 2SC4081-R
Q407	8-729-905-35	s	TRANSISTOR 2SC4081-R
Q408	8-729-905-35	s	TRANSISTOR 2SC4081-R
Q409	8-729-905-35	s	TRANSISTOR 2SC4081-R
Q410	8-729-905-35	s	TRANSISTOR 2SC4081-R
Q411	8-729-905-35	s	TRANSISTOR 2SC4081-R
Q412	8-729-905-35	s	TRANSISTOR 2SC4081-R
Q413	8-729-905-35	s	TRANSISTOR 2SC4081-R
Q414	8-729-905-35	s	TRANSISTOR 2SC4081-R
Q415	8-729-905-35	s	TRANSISTOR 2SC4081-R
Q501	8-729-029-14	s	TRANSISTOR DTC144EUA-T106
Q502	8-729-925-47	s	TRANSISTOR IMB2
Q504	8-729-209-07	s	TRANSISTOR 2SC4213-B
Q505	8-729-209-07	s	TRANSISTOR 2SC4213-B
Q506	8-729-026-53	s	TRANSISTOR 2SA1576A-T106-QR
Q507	8-729-026-53	s	TRANSISTOR 2SA1576A-T106-QR
Q508	8-729-141-75	s	TRANSISTOR 2SD596DV345
Q509	8-729-026-53	s	TRANSISTOR 2SA1576A-T106-QR
Q510	8-729-141-48	s	TRANSISTOR 2SB624-BV345
Q511	8-729-029-14	s	TRANSISTOR DTC144EUA-T106
Q512	8-729-141-75	s	TRANSISTOR 2SD596DV345
Q513	8-729-029-14	s	TRANSISTOR DTC144EUA-T106
Q514	8-729-141-75	s	TRANSISTOR 2SD596DV345
Q515	8-729-029-14	s	TRANSISTOR DTC144EUA-T106
Q516	8-729-209-07	s	TRANSISTOR 2SC4213-B
Q701	8-729-209-07	s	TRANSISTOR 2SC4213-B
Q702	8-729-209-07	s	TRANSISTOR 2SC4213-B
Q801	8-729-029-14	s	TRANSISTOR DTC144EUA-T106
Q802	8-729-029-14	s	TRANSISTOR DTC144EUA-T106
Q803	8-729-101-07	s	TRANSISTOR 2SB798
Q804	8-729-140-63	s	TRANSISTOR 2SA1611-M5M6
R1	1-216-849-11	s	METAL, CHIP 220K 5% 1/16W
R2	1-216-845-11	s	METAL, CHIP 100K 5% 1/16W
R3	1-216-849-11	s	METAL, CHIP 220K 5% 1/16W
R4	1-216-845-11	s	METAL, CHIP 100K 5% 1/16W
R5	1-216-845-11	s	METAL, CHIP 100K 5% 1/16W
R6	1-216-845-11	s	METAL, CHIP 100K 5% 1/16W
R7	1-216-845-11	s	METAL, CHIP 100K 5% 1/16W
R8	1-216-827-11	s	METAL, CHIP 3.3K 5% 1/16W
R9	1-216-797-11	s	METAL, CHIP 10 5% 1/16W
R10	1-216-797-11	s	METAL, CHIP 10 5% 1/16W
R11	1-216-797-11	s	METAL, CHIP 10 5% 1/16W
R12	1-216-849-11	s	METAL, CHIP 220K 5% 1/16W
R13	1-216-825-11	s	METAL, CHIP 2.2K 5% 1/16W
R14	1-216-829-11	s	METAL, CHIP 4.7K 5% 1/16W
R15	1-216-823-11	s	METAL, CHIP 1.5K 5% 1/16W
R16	1-216-830-11	s	METAL, CHIP 5.6K 5% 1/16W
R17	1-216-845-11	s	METAL, CHIP 100K 5% 1/16W
R18	1-216-821-11	s	METAL, CHIP 1K 5% 1/16W
R19	1-216-821-11	s	METAL, CHIP 1K 5% 1/16W
R20	1-216-821-11	s	METAL, CHIP 1K 5% 1/16W
R21	1-216-821-11	s	METAL, CHIP 1K 5% 1/16W
R22	1-216-821-11	s	METAL, CHIP 1K 5% 1/16W
R23	1-216-821-11	s	METAL, CHIP 1K 5% 1/16W
R24	1-216-821-11	s	METAL, CHIP 1K 5% 1/16W
R25	1-216-821-11	s	METAL, CHIP 1K 5% 1/16W
R26	1-216-821-11	s	METAL, CHIP 1K 5% 1/16W
R27	1-216-827-11	s	METAL, CHIP 3.3K 5% 1/16W

(FP-118 BOARD)

Ref. No. or Q'ty	Part No.	SP	Description
R28	1-216-827-11	s	METAL, CHIP 3.3K 5% 1/16W
R29	1-216-809-11	s	METAL, CHIP 100 5% 1/16W
R30	1-216-809-11	s	METAL, CHIP 100 5% 1/16W
R31	1-216-864-11	s	METAL, CHIP 0 5% 1/16W
R32	1-216-864-11	s	METAL, CHIP 0 5% 1/16W
R33	1-216-849-11	s	METAL, CHIP 220K 5% 1/16W
R34	1-216-821-11	s	METAL, CHIP 1K 5% 1/16W
R35	1-216-845-11	s	METAL, CHIP 100K 5% 1/16W
R36	1-216-821-11	s	METAL, CHIP 1K 5% 1/16W
R37	1-216-864-11	s	METAL, CHIP 0 5% 1/16W
R38	1-216-857-11	s	METAL, CHIP 1M 5% 1/16W
R39	1-216-849-11	s	METAL, CHIP 220K 5% 1/16W
R40	1-216-864-11	s	METAL, CHIP 0 5% 1/16W
R41	1-216-821-11	s	METAL, CHIP 1K 5% 1/16W
R42	1-216-821-11	s	METAL, CHIP 1K 5% 1/16W
R43	1-216-821-11	s	METAL, CHIP 1K 5% 1/16W
R44	1-216-849-11	s	METAL, CHIP 220K 5% 1/16W
R45	1-216-849-11	s	METAL, CHIP 220K 5% 1/16W
R47	1-216-849-11	s	METAL, CHIP 220K 5% 1/16W
R48	1-216-845-11	s	METAL, CHIP 100K 5% 1/16W
R49	1-216-857-11	s	METAL, CHIP 1M 5% 1/16W
R50	1-216-821-11	s	METAL, CHIP 1K 5% 1/16W
R51	1-216-849-11	s	METAL, CHIP 220K 5% 1/16W
R52	1-216-845-11	s	METAL, CHIP 100K 5% 1/16W
R53	1-216-849-11	s	METAL, CHIP 220K 5% 1/16W
R54	1-216-809-11	s	METAL, CHIP 100 5% 1/16W
R55	1-216-849-11	s	METAL, CHIP 220K 5% 1/16W
R56	1-216-849-11	s	METAL, CHIP 220K 5% 1/16W
R57	1-216-849-11	s	METAL, CHIP 220K 5% 1/16W
R58	1-216-833-91	s	METAL, CHIP 10K 5% 1/16W
R59	1-216-833-91	s	METAL, CHIP 10K 5% 1/16W
R60	1-216-816-11	s	METAL, CHIP 390 5% 1/16W
R61	1-216-809-11	s	METAL, CHIP 100 5% 1/16W
R62	1-216-809-11	s	METAL, CHIP 100 5% 1/16W
R63	1-216-849-11	s	METAL, CHIP 220K 5% 1/16W
R64	1-216-849-11	s	METAL, CHIP 220K 5% 1/16W
R65	1-216-841-11	s	METAL, CHIP 47K 5% 1/16W
R66	1-216-845-11	s	METAL, CHIP 100K 5% 1/16W
R67	1-216-815-11	s	METAL, CHIP 330 5% 1/16W
R68	1-216-815-11	s	METAL, CHIP 330 5% 1/16W
R69	1-216-815-11	s	METAL, CHIP 330 5% 1/16W
R70	1-216-817-11	s	METAL, CHIP 470 5% 1/16W
R71	1-216-815-11	s	METAL, CHIP 330 5% 1/16W
R72	1-216-820-11	s	METAL, CHIP 820 5% 1/16W
R73	1-216-833-91	s	METAL, CHIP 10K 5% 1/16W
R74	1-216-821-11	s	METAL, CHIP 1K 5% 1/16W
R75	1-216-821-11	s	METAL, CHIP 1K 5% 1/16W
R76	1-216-821-11	s	METAL, CHIP 1K 5% 1/16W
R77	1-216-821-11	s	METAL, CHIP 1K 5% 1/16W
R78	1-216-821-11	s	METAL, CHIP 1K 5% 1/16W
R79	1-216-821-11	s	METAL, CHIP 1K 5% 1/16W
R80	1-216-821-11	s	METAL, CHIP 1K 5% 1/16W
R81	1-216-821-11	s	METAL, CHIP 1K 5% 1/16W
R82	1-216-821-11	s	METAL, CHIP 1K 5% 1/16W
R83	1-216-821-11	s	METAL, CHIP 1K 5% 1/16W
R84	1-216-817-11	s	METAL, CHIP 470 5% 1/16W
R85	1-216-817-11	s	METAL, CHIP 470 5% 1/16W
R86	1-216-817-11	s	METAL, CHIP 470 5% 1/16W
R87	1-216-817-11	s	METAL, CHIP 470 5% 1/16W

(FP-118 BOARD)

Ref. No. or Q'ty	Part No.	SP	Description
R88	1-216-821-11	s	METAL, CHIP 1K 5% 1/16W
R89	1-216-821-11	s	METAL, CHIP 1K 5% 1/16W
R90	1-216-821-11	s	METAL, CHIP 1K 5% 1/16W
R91	1-216-841-11	s	METAL, CHIP 47K 5% 1/16W
R92	1-216-849-11	s	METAL, CHIP 220K 5% 1/16W
R93	1-216-809-11	s	METAL, CHIP 100 5% 1/16W
R94	1-216-809-11	s	METAL, CHIP 100 5% 1/16W
R95	1-216-809-11	s	METAL, CHIP 100 5% 1/16W
R200	1-216-821-11	s	METAL, CHIP 1K 5% 1/16W
R201	1-216-849-11	s	METAL, CHIP 220K 5% 1/16W
R202	1-216-821-11	s	METAL, CHIP 1K 5% 1/16W
R203	1-216-849-11	s	METAL, CHIP 220K 5% 1/16W
R204	1-216-821-11	s	METAL, CHIP 1K 5% 1/16W
R205	1-216-849-11	s	METAL, CHIP 220K 5% 1/16W
R206	1-216-821-11	s	METAL, CHIP 1K 5% 1/16W
R207	1-216-851-11	s	METAL, CHIP 330K 5% 1/16W
R208	1-216-849-11	s	METAL, CHIP 220K 5% 1/16W
R209	1-216-849-11	s	METAL, CHIP 220K 5% 1/16W
R210	1-216-849-11	s	METAL, CHIP 220K 5% 1/16W
R211	1-216-821-11	s	METAL, CHIP 1K 5% 1/16W
R212	1-216-849-11	s	METAL, CHIP 220K 5% 1/16W
R213	1-216-849-11	s	METAL, CHIP 220K 5% 1/16W
R214	1-216-849-11	s	METAL, CHIP 220K 5% 1/16W
R215	1-216-809-11	s	METAL, CHIP 100 5% 1/16W
R216	1-216-861-11	s	METAL, CHIP 2.2M 5% 1/16W
R217	1-216-837-11	s	METAL, CHIP 22K 5% 1/16W
R218	1-216-837-11	s	METAL, CHIP 22K 5% 1/16W
R219	1-216-849-11	s	METAL, CHIP 220K 5% 1/16W
R220	1-216-827-11	s	METAL, CHIP 3.3K 5% 1/16W
R221	1-216-821-11	s	METAL, CHIP 1K 5% 1/16W
R222	1-216-838-11	s	METAL, CHIP 27K 5% 1/16W
R223	1-216-827-11	s	METAL, CHIP 3.3K 5% 1/16W
R224	1-216-821-11	s	METAL, CHIP 1K 5% 1/16W
R225	1-216-838-11	s	METAL, CHIP 27K 5% 1/16W
R226	1-216-864-11	s	METAL, CHIP 0 5% 1/16W
R227	1-216-821-11	s	METAL, CHIP 1K 5% 1/16W
R228	1-216-821-11	s	METAL, CHIP 1K 5% 1/16W
R229	1-216-821-11	s	METAL, CHIP 1K 5% 1/16W
R230	1-216-849-11	s	METAL, CHIP 220K 5% 1/16W
R231	1-216-849-11	s	METAL, CHIP 220K 5% 1/16W
R232	1-216-821-11	s	METAL, CHIP 1K 5% 1/16W
R233	1-216-849-11	s	METAL, CHIP 220K 5% 1/16W
R234	1-216-821-11	s	METAL, CHIP 1K 5% 1/16W
R235	1-216-821-11	s	METAL, CHIP 1K 5% 1/16W
R236	1-216-821-11	s	METAL, CHIP 1K 5% 1/16W
R237	1-216-833-91	s	METAL, CHIP 10K 5% 1/16W
R238	1-216-849-11	s	METAL, CHIP 220K 5% 1/16W
R239	1-218-890-11	s	METAL, CHIP 62K 0.50% 1/16W
R240	1-216-821-11	s	METAL, CHIP 1K 5% 1/16W
R241	1-216-845-11	s	METAL, CHIP 100K 5% 1/16W
R242	1-216-833-91	s	METAL, CHIP 10K 5% 1/16W
R243	1-216-845-11	s	METAL, CHIP 100K 5% 1/16W
R244	1-216-849-11	s	METAL, CHIP 220K 5% 1/16W
R245	1-216-849-11	s	METAL, CHIP 220K 5% 1/16W
R246	1-216-864-11	s	METAL, CHIP 0 5% 1/16W
R247	1-216-857-11	s	METAL, CHIP 1M 5% 1/16W
R248	1-216-815-11	s	METAL, CHIP 330 5% 1/16W
R249	1-216-845-11	s	METAL, CHIP 100K 5% 1/16W
R250	1-216-857-11	s	METAL, CHIP 1M 5% 1/16W

(FP-118 BOARD)

Ref. No. or Q'ty	Part No.	SP	Description
R251	1-216-841-11	s	METAL, CHIP 47K 5% 1/16W
R252	1-216-849-11	s	METAL, CHIP 220K 5% 1/16W
R253	1-216-845-11	s	METAL, CHIP 100K 5% 1/16W
R254	1-216-845-11	s	METAL, CHIP 100K 5% 1/16W
R255	1-216-839-11	s	METAL, CHIP 33K 5% 1/16W
R256	1-218-871-11	s	METAL, CHIP 10K 0.50% 1/16W
R257	1-218-882-11	s	METAL, CHIP 30K 0.50% 1/16W
R258	1-218-858-11	s	METAL, CHIP 3K 0.50% 1/16W
R259	1-218-851-11	s	METAL, CHIP 1.5K 0.50% 1/16W
R260	1-216-841-11	s	METAL, CHIP 47K 5% 1/16W
R261	1-211-990-11	s	METAL, CHIP 75 0.50% 1/16W
R262	1-216-826-11	s	METAL, CHIP 2.7K 5% 1/16W
R263	1-216-826-11	s	METAL, CHIP 2.7K 5% 1/16W
R264	1-216-809-11	s	METAL, CHIP 100 5% 1/16W
R265	1-216-826-11	s	METAL, CHIP 2.7K 5% 1/16W
R266	1-216-826-11	s	METAL, CHIP 2.7K 5% 1/16W
R267	1-216-809-11	s	METAL, CHIP 100 5% 1/16W
R268	1-216-821-11	s	METAL, CHIP 1K 5% 1/16W
R269	1-218-880-11	s	METAL, CHIP 24K 0.50% 1/16W
R270	1-216-849-11	s	METAL, CHIP 220K 5% 1/16W
R271	1-216-849-11	s	METAL, CHIP 220K 5% 1/16W
R272	1-216-821-11	s	METAL, CHIP 1K 5% 1/16W
R273	1-216-821-11	s	METAL, CHIP 1K 5% 1/16W
R274	1-216-849-11	s	METAL, CHIP 220K 5% 1/16W
R275	1-216-849-11	s	METAL, CHIP 220K 5% 1/16W
R276	1-216-849-11	s	METAL, CHIP 220K 5% 1/16W
R277	1-216-849-11	s	METAL, CHIP 220K 5% 1/16W
R278	1-216-821-11	s	METAL, CHIP 1K 5% 1/16W
R279	1-216-821-11	s	METAL, CHIP 1K 5% 1/16W
R280	1-216-821-11	s	METAL, CHIP 1K 5% 1/16W
R281	1-216-821-11	s	METAL, CHIP 1K 5% 1/16W
R282	1-216-849-11	s	METAL, CHIP 220K 5% 1/16W
R283	1-216-849-11	s	METAL, CHIP 220K 5% 1/16W
R300	1-216-833-91	s	METAL, CHIP 10K 5% 1/16W
R301	1-216-843-11	s	METAL, CHIP 68K 5% 1/16W
R302	1-216-839-11	s	METAL, CHIP 33K 5% 1/16W
R303	1-216-841-11	s	METAL, CHIP 47K 5% 1/16W
R304	1-216-861-11	s	METAL, CHIP 2.2M 5% 1/16W
R305	1-216-861-11	s	METAL, CHIP 2.2M 5% 1/16W
R306	1-216-821-11	s	METAL, CHIP 1K 5% 1/16W
R307	1-216-809-11	s	METAL, CHIP 100 5% 1/16W
R308	1-216-845-11	s	METAL, CHIP 100K 5% 1/16W
R309	1-216-845-11	s	METAL, CHIP 100K 5% 1/16W
R310	1-216-833-91	s	METAL, CHIP 10K 5% 1/16W
R311	1-216-851-11	s	METAL, CHIP 330K 5% 1/16W
R312	1-216-845-11	s	METAL, CHIP 100K 5% 1/16W
R313	1-216-845-11	s	METAL, CHIP 100K 5% 1/16W
R314	1-216-845-11	s	METAL, CHIP 100K 5% 1/16W
R315	1-216-821-11	s	METAL, CHIP 1K 5% 1/16W
R316	1-216-852-11	s	METAL, CHIP 390K 5% 1/16W
R317	1-216-845-11	s	METAL, CHIP 100K 5% 1/16W
R318	1-216-838-11	s	METAL, CHIP 27K 5% 1/16W
R319	1-216-857-11	s	METAL, CHIP 1M 5% 1/16W
R320	1-216-857-11	s	METAL, CHIP 1M 5% 1/16W
R321	1-216-855-11	s	METAL, CHIP 680K 5% 1/16W
R322	1-216-855-11	s	METAL, CHIP 680K 5% 1/16W
R323	1-216-845-11	s	METAL, CHIP 100K 5% 1/16W
R324	1-216-841-11	s	METAL, CHIP 47K 5% 1/16W
R325	1-216-841-11	s	METAL, CHIP 47K 5% 1/16W

(FP-118 BOARD)

Ref. No. or Q'ty	Part No.	SP	Description
R326	1-216-797-11	s	METAL, CHIP 10 5% 1/16W
R327	1-216-809-11	s	METAL, CHIP 100 5% 1/16W
R328	1-216-809-11	s	METAL, CHIP 100 5% 1/16W
R329	1-218-871-11	s	METAL, CHIP 10K 0.50% 1/16W
R330	1-216-821-11	s	METAL, CHIP 1K 5% 1/16W
R331	1-216-864-11	s	METAL, CHIP 0 5% 1/16W
R332	1-216-849-11	s	METAL, CHIP 220K 5% 1/16W
R333	1-216-845-11	s	METAL, CHIP 100K 5% 1/16W
R401	1-218-848-11	s	METAL, CHIP 1.1K 0.50% 1/16W
R402	1-218-848-11	s	METAL, CHIP 1.1K 0.50% 1/16W
R404	1-218-848-11	s	METAL, CHIP 1.1K 0.50% 1/16W
R405	1-218-848-11	s	METAL, CHIP 1.1K 0.50% 1/16W
R406	1-216-864-11	s	METAL, CHIP 0 5% 1/16W
R407	1-218-855-11	s	METAL, CHIP 2.2K 0.50% 1/16W
R408	1-218-855-11	s	METAL, CHIP 2.2K 0.50% 1/16W
R412	1-218-855-11	s	METAL, CHIP 2.2K 0.50% 1/16W
R413	1-218-855-11	s	METAL, CHIP 2.2K 0.50% 1/16W
R414	1-216-829-11	s	METAL, CHIP 4.7K 5% 1/16W
R415	1-216-829-11	s	METAL, CHIP 4.7K 5% 1/16W
R416	1-216-864-11	s	METAL, CHIP 0 5% 1/16W
R417	1-216-864-11	s	METAL, CHIP 0 5% 1/16W
R420	1-218-872-11	s	METAL, CHIP 11K 0.50% 1/16W
R421	1-218-872-11	s	METAL, CHIP 11K 0.50% 1/16W
R423	1-218-879-11	s	METAL, CHIP 22K 0.50% 1/16W
R425	1-218-866-11	s	METAL, CHIP 6.2K 0.50% 1/16W
R426	1-218-847-11	s	METAL, CHIP 1K 0.50% 1/16W
R427	1-218-866-11	s	METAL, CHIP 6.2K 0.50% 1/16W
R428	1-218-847-11	s	METAL, CHIP 1K 0.50% 1/16W
R429	1-218-879-11	s	METAL, CHIP 22K 0.50% 1/16W
R430	1-218-863-11	s	METAL, CHIP 4.7K 0.50% 1/16W
R431	1-218-887-11	s	METAL, CHIP 47K 0.50% 1/16W
R432	1-218-887-11	s	METAL, CHIP 47K 0.50% 1/16W
R433	1-218-887-11	s	METAL, CHIP 47K 0.50% 1/16W
R434	1-218-887-11	s	METAL, CHIP 47K 0.50% 1/16W
R435	1-216-833-91	s	METAL, CHIP 10K 5% 1/16W
R436	1-216-809-11	s	METAL, CHIP 100 5% 1/16W
R437	1-216-833-91	s	METAL, CHIP 10K 5% 1/16W
R438	1-216-845-11	s	METAL, CHIP 100K 5% 1/16W
R439	1-216-837-11	s	METAL, CHIP 22K 5% 1/16W
R440	1-218-839-11	s	METAL, CHIP 470 0.50% 1/16W
R441	1-218-839-11	s	METAL, CHIP 470 0.50% 1/16W
R442	1-211-990-11	s	METAL, CHIP 75 0.50% 1/16W
R443	1-218-845-11	s	METAL, CHIP 820 0.50% 1/16W
R444	1-216-829-11	s	METAL, CHIP 4.7K 5% 1/16W
R445	1-218-871-11	s	METAL, CHIP 10K 0.50% 1/16W
R446	1-218-871-11	s	METAL, CHIP 10K 0.50% 1/16W
R447	1-216-864-11	s	METAL, CHIP 0 5% 1/16W
R448	1-216-864-11	s	METAL, CHIP 0 5% 1/16W
R451	1-216-833-91	s	METAL, CHIP 10K 5% 1/16W
R452	1-216-833-91	s	METAL, CHIP 10K 5% 1/16W
R453	1-216-821-11	s	METAL, CHIP 1K 5% 1/16W
R454	1-216-821-11	s	METAL, CHIP 1K 5% 1/16W
R455	1-216-829-11	s	METAL, CHIP 4.7K 5% 1/16W
R456	1-216-833-91	s	METAL, CHIP 10K 5% 1/16W
R457	1-216-829-11	s	METAL, CHIP 4.7K 5% 1/16W
R458	1-216-833-91	s	METAL, CHIP 10K 5% 1/16W
R459	1-216-801-11	s	METAL, CHIP 22 5% 1/16W
R460	1-216-801-11	s	METAL, CHIP 22 5% 1/16W
R461	1-216-833-91	s	METAL, CHIP 10K 5% 1/16W

(FP-118 BOARD)

Ref. No. or Q'ty	Part No.	SP	Description
R462	1-216-833-91	s	METAL, CHIP 10K 5% 1/16W
R463	1-218-885-11	s	METAL, CHIP 39K 0.50% 1/16W
R464	1-216-837-11	s	METAL, CHIP 22K 5% 1/16W
R467	1-218-878-11	s	METAL, CHIP 20K 0.50% 1/16W
R468	1-218-839-11	s	METAL, CHIP 470 0.50% 1/16W
R469	1-218-878-11	s	METAL, CHIP 20K 0.50% 1/16W
R470	1-218-839-11	s	METAL, CHIP 470 0.50% 1/16W
R471	1-216-846-11	s	METAL, CHIP 120K 5% 1/16W
R472	1-218-907-11	s	METAL, CHIP 330K 0.50% 1/16W
R474	1-218-863-11	s	METAL, CHIP 4.7K 0.50% 1/16W
R475	1-216-841-11	s	METAL, CHIP 47K 5% 1/16W
R476	1-218-863-11	s	METAL, CHIP 4.7K 0.50% 1/16W
R477	1-216-841-11	s	METAL, CHIP 47K 5% 1/16W
R478	1-218-871-11	s	METAL, CHIP 10K 0.50% 1/16W
R479	1-218-871-11	s	METAL, CHIP 10K 0.50% 1/16W
R480	1-216-833-91	s	METAL, CHIP 10K 5% 1/16W
R481	1-216-833-91	s	METAL, CHIP 10K 5% 1/16W
R482	1-218-878-11	s	METAL, CHIP 20K 0.50% 1/16W
R483	1-218-878-11	s	METAL, CHIP 20K 0.50% 1/16W
R484	1-218-855-11	s	METAL, CHIP 2.2K 0.50% 1/16W
R485	1-218-855-11	s	METAL, CHIP 2.2K 0.50% 1/16W
R486	1-218-878-11	s	METAL, CHIP 20K 0.50% 1/16W
R487	1-218-857-11	s	METAL, CHIP 2.7K 0.50% 1/16W
R488	1-216-833-91	s	METAL, CHIP 10K 5% 1/16W
R489	1-218-878-11	s	METAL, CHIP 20K 0.50% 1/16W
R490	1-218-857-11	s	METAL, CHIP 2.7K 0.50% 1/16W
R491	1-216-833-91	s	METAL, CHIP 10K 5% 1/16W
R492	1-216-864-11	s	METAL, CHIP 0 5% 1/16W
R493	1-216-833-91	s	METAL, CHIP 10K 5% 1/16W
R494	1-216-833-91	s	METAL, CHIP 10K 5% 1/16W
R497	1-216-833-91	s	METAL, CHIP 10K 5% 1/16W
R498	1-216-833-91	s	METAL, CHIP 10K 5% 1/16W
R499	1-216-849-11	s	METAL, CHIP 220K 5% 1/16W
R500	1-216-849-11	s	METAL, CHIP 220K 5% 1/16W
R501	1-216-817-11	s	METAL, CHIP 470 5% 1/16W
R502	1-216-817-11	s	METAL, CHIP 470 5% 1/16W
R503	1-216-829-11	s	METAL, CHIP 4.7K 5% 1/16W
R504	1-216-829-11	s	METAL, CHIP 4.7K 5% 1/16W
R505	1-216-809-11	s	METAL, CHIP 100 5% 1/16W
R506	1-216-833-91	s	METAL, CHIP 10K 5% 1/16W
R507	1-216-845-11	s	METAL, CHIP 100K 5% 1/16W
R508	1-218-879-11	s	METAL, CHIP 22K 0.50% 1/16W
R510	1-218-856-11	s	METAL, CHIP 2.4K 0.50% 1/16W
R512	1-218-856-11	s	METAL, CHIP 2.4K 0.50% 1/16W
R513	1-218-863-11	s	METAL, CHIP 4.7K 0.50% 1/16W
R514	1-218-863-11	s	METAL, CHIP 4.7K 0.50% 1/16W
R515	1-216-829-11	s	METAL, CHIP 4.7K 5% 1/16W
R516	1-216-864-11	s	METAL, CHIP 0 5% 1/16W
R517	1-216-864-11	s	METAL, CHIP 0 5% 1/16W
R518	1-216-829-11	s	METAL, CHIP 4.7K 5% 1/16W
R522	1-218-872-11	s	METAL, CHIP 11K 0.50% 1/16W
R523	1-218-872-11	s	METAL, CHIP 11K 0.50% 1/16W
R524	1-218-879-11	s	METAL, CHIP 22K 0.50% 1/16W
R601	1-216-845-11	s	METAL, CHIP 100K 5% 1/16W
R602	1-216-845-11	s	METAL, CHIP 100K 5% 1/16W
R603	1-216-845-11	s	METAL, CHIP 100K 5% 1/16W
R604	1-216-845-11	s	METAL, CHIP 100K 5% 1/16W
R605	1-216-845-11	s	METAL, CHIP 100K 5% 1/16W
R608	1-218-855-11	s	METAL, CHIP 2.2K 0.50% 1/16W

(FP-118 BOARD)

Ref. No. or Q'ty	Part No.	SP	Description
R609	1-218-855-11	s	METAL, CHIP 2.2K 0.50% 1/16W
R610	1-218-851-11	s	METAL, CHIP 1.5K 0.50% 1/16W
R611	1-218-859-11	s	METAL, CHIP 3.3K 0.50% 1/16W
R612	1-218-859-11	s	METAL, CHIP 3.3K 0.50% 1/16W
R613	1-218-857-11	s	METAL, CHIP 2.7K 0.50% 1/16W
R614	1-218-857-11	s	METAL, CHIP 2.7K 0.50% 1/16W
R615	1-218-847-11	s	METAL, CHIP 1K 0.50% 1/16W
R616	1-216-845-11	s	METAL, CHIP 100K 5% 1/16W
R617	1-216-845-11	s	METAL, CHIP 100K 5% 1/16W
R618	1-218-855-11	s	METAL, CHIP 2.2K 0.50% 1/16W
R619	1-218-871-11	s	METAL, CHIP 10K 0.50% 1/16W
R620	1-218-871-11	s	METAL, CHIP 10K 0.50% 1/16W
R621	1-218-871-11	s	METAL, CHIP 10K 0.50% 1/16W
R622	1-218-871-11	s	METAL, CHIP 10K 0.50% 1/16W
R623	1-218-855-11	s	METAL, CHIP 2.2K 0.50% 1/16W
R624	1-216-833-91	s	METAL, CHIP 10K 5% 1/16W
R625	1-216-817-11	s	METAL, CHIP 470 5% 1/16W
R626	1-216-833-91	s	METAL, CHIP 10K 5% 1/16W
R627	1-216-817-11	s	METAL, CHIP 470 5% 1/16W
R628	1-216-833-91	s	METAL, CHIP 10K 5% 1/16W
R629	1-216-833-91	s	METAL, CHIP 10K 5% 1/16W
R630	1-218-877-11	s	METAL, CHIP 18K 0.50% 1/16W
R631	1-218-873-11	s	METAL, CHIP 12K 0.50% 1/16W
R632	1-218-881-11	s	METAL, CHIP 27K 0.50% 1/16W
R633	1-218-903-11	s	METAL, CHIP 220K 0.50% 1/16W
R635	1-216-864-11	s	METAL, CHIP 0 5% 1/16W
R636	1-216-833-91	s	METAL, CHIP 10K 5% 1/16W
R637	1-218-861-11	s	METAL, CHIP 3.9K 0.50% 1/16W
R638	1-218-827-11	s	METAL, CHIP 150 0.50% 1/16W
R639	1-216-825-11	s	METAL, CHIP 2.2K 5% 1/16W
R640	1-216-833-91	s	METAL, CHIP 10K 5% 1/16W
R641	1-216-845-11	s	METAL, CHIP 100K 5% 1/16W
R642	1-216-833-91	s	METAL, CHIP 10K 5% 1/16W
R643	1-216-833-91	s	METAL, CHIP 10K 5% 1/16W
R644	1-216-864-11	s	METAL, CHIP 0 5% 1/16W
R645	1-216-833-91	s	METAL, CHIP 10K 5% 1/16W
R646	1-216-829-11	s	METAL, CHIP 4.7K 5% 1/16W
R647	1-216-797-11	s	METAL, CHIP 10 5% 1/16W
R649	1-216-864-11	s	METAL, CHIP 0 5% 1/16W
R650	1-216-821-11	s	METAL, CHIP 1K 5% 1/16W
R651	1-216-833-91	s	METAL, CHIP 10K 5% 1/16W
R652	1-216-833-91	s	METAL, CHIP 10K 5% 1/16W
R653	1-216-821-11	s	METAL, CHIP 1K 5% 1/16W
R654	1-211-969-11	s	METAL, CHIP 10 0.50% 1/16W
R656	1-216-864-11	s	METAL, CHIP 0 5% 1/16W
R657	1-216-829-11	s	METAL, CHIP 4.7K 5% 1/16W
R658	1-216-841-11	s	METAL, CHIP 47K 5% 1/16W
R659	1-216-829-11	s	METAL, CHIP 4.7K 5% 1/16W
R660	1-218-476-11	s	METAL, CHIP 180 5% 1/4W
R661	1-218-866-11	s	METAL, CHIP 6.2K 0.50% 1/16W
R702	1-218-863-11	s	METAL, CHIP 4.7K 0.50% 1/16W
R703	1-218-849-11	s	METAL, CHIP 1.2K 0.50% 1/16W
R705	1-218-863-11	s	METAL, CHIP 4.7K 0.50% 1/16W
R707	1-218-861-11	s	METAL, CHIP 3.9K 0.50% 1/16W
R708	1-216-864-11	s	METAL, CHIP 0 5% 1/16W
R715	1-216-841-11	s	METAL, CHIP 47K 5% 1/16W
R717	1-216-841-11	s	METAL, CHIP 47K 5% 1/16W
R718	1-218-849-11	s	METAL, CHIP 1.2K 0.50% 1/16W
R719	1-218-849-11	s	METAL, CHIP 1.2K 0.50% 1/16W

(FP-118 BOARD)

Ref. No. or Q'ty	Part No.	SP	Description
R720	1-216-821-11	s	METAL, CHIP 1K 5% 1/16W
R721	1-216-833-91	s	METAL, CHIP 10K 5% 1/16W
R722	1-216-841-11	s	METAL, CHIP 47K 5% 1/16W
R728	1-216-841-11	s	METAL, CHIP 47K 5% 1/16W
R729	1-216-829-11	s	METAL, CHIP 4.7K 5% 1/16W
R730	1-216-829-11	s	METAL, CHIP 4.7K 5% 1/16W
R731	1-216-841-11	s	METAL, CHIP 47K 5% 1/16W
R733	1-211-969-11	s	METAL, CHIP 10 0.50% 1/16W
R736	1-211-969-11	s	METAL, CHIP 10 0.50% 1/16W
R738	1-211-969-11	s	METAL, CHIP 10 0.50% 1/16W
R801	1-216-805-11	s	METAL, CHIP 47 5% 1/16W
R802	1-216-805-11	s	METAL, CHIP 47 5% 1/16W
R803	1-216-849-11	s	METAL, CHIP 220K 5% 1/16W
R804	1-218-740-11	s	METAL, CHIP 100K 0.50% 1/16W
R805	1-219-365-11	s	SHORT 0
R806	1-218-740-11	s	METAL, CHIP 100K 0.50% 1/16W
R807	1-218-692-11	s	METAL, CHIP 1K 0.50% 1/16W
R808	1-218-740-11	s	METAL, CHIP 100K 0.50% 1/16W
R809	1-218-740-11	s	METAL, CHIP 100K 0.50% 1/16W
R812	1-216-864-11	s	METAL, CHIP 0 5% 1/16W
RB1	1-236-907-11	s	RESISTOR BLOCK, CHIP 100KX4
RB2	1-236-904-11	s	RESISTOR BLOCK, CHIP 1KX4
RB3	1-239-444-11	s	RESUSTIR BLOCK, CHIP 220K
RB4	1-239-444-11	s	RESUSTIR BLOCK, CHIP 220K
RB5	1-236-904-11	s	RESISTOR BLOCK, CHIP 1KX4
RB6	1-236-904-11	s	RESISTOR BLOCK, CHIP 1KX4
RB7	1-239-444-11	s	RESUSTIR BLOCK, CHIP 220K
RB8	1-239-444-11	s	RESUSTIR BLOCK, CHIP 220K
RB9	1-239-444-11	s	RESUSTIR BLOCK, CHIP 220K
RB10	1-239-412-11	s	NETWORK RESISTOR (CHIP) 100
RB11	1-239-412-11	s	NETWORK RESISTOR (CHIP) 100
RB12	1-236-904-11	s	RESISTOR BLOCK, CHIP 1KX4
RB202	1-239-711-91	s	NETWORK RESISTOR (CHIP) 0
RB203	1-239-310-11	s	RESISTOR ARRAY, CHIP 220K
RB204	1-239-310-11	s	RESISTOR ARRAY, CHIP 220K
RB207	1-239-444-11	s	RESUSTIR BLOCK, CHIP 220K
RB208	1-239-426-11	s	NETWORK RESISTOR (CHIP) 2.2K
RB209	1-239-426-11	s	NETWORK RESISTOR (CHIP) 2.2K
RB210	1-239-426-11	s	NETWORK RESISTOR (CHIP) 2.2K
RB211	1-239-426-11	s	NETWORK RESISTOR (CHIP) 2.2K
RB212	1-239-426-11	s	NETWORK RESISTOR (CHIP) 2.2K
RB801	1-239-621-11	s	RESISTOR BLOCK, CHIP 22
RB802	1-239-444-11	s	RESUSTIR BLOCK, CHIP 220K
RB803	1-236-908-11	s	RESISTOR, NETWORK, CHIP 10k
RB804	1-236-908-11	s	RESISTOR, NETWORK, CHIP 10k
RB805	1-239-444-11	s	RESUSTIR BLOCK, CHIP 220K
RB806	1-239-444-11	s	RESUSTIR BLOCK, CHIP 220K
RB807	1-236-908-11	s	RESISTOR, NETWORK, CHIP 10k
RB808	1-236-908-11	s	RESISTOR, NETWORK, CHIP 10k
RB809	1-239-444-11	s	RESUSTIR BLOCK, CHIP 220K
RV401	1-230-337-11	s	RES, VAR CARBON 10K
RV402	1-230-337-11	s	RES, VAR CARBON 10K
RV403	1-223-278-11	s	RES, ADJ, CERMET 100K
RV601	1-223-276-11	s	RES, ADJ, CERMET 22K
RV602	1-223-276-11	s	RES, ADJ, CERMET 22K
RV603	1-230-337-11	s	RES, VAR CARBON 10K
RV604	1-230-337-11	s	RES, VAR CARBON 10K
S1	1-570-909-21	s	SWITCH, PUSH

(FP-118 BOARD)

Ref. No. or Q'ty	Part No.	SP	Description
S2	1-570-909-21	s	SWITCH, PUSH
S3	1-570-909-21	s	SWITCH, PUSH
S4	1-570-909-21	s	SWITCH, PUSH
S5	1-771-141-11	s	SWITCH, SLIDE
S6	1-771-141-11	s	SWITCH, SLIDE
S200	1-570-832-11	s	SWITCH, SLIDE
S201	1-570-909-21	s	SWITCH, PUSH
S203	1-570-838-11	s	SWITCH, SLIDE
S401	1-771-323-11	s	SWITCH, SLIDE
S402	1-771-323-11	s	SWITCH, SLIDE
S403	1-771-140-11	s	SWITCH, SLIDE
S404	1-771-140-11	s	SWITCH, SLIDE
S501	1-771-323-11	s	SWITCH, SLIDE
S801	1-771-141-11	s	SWITCH, SLIDE
S802	1-570-909-21	s	SWITCH, PUSH
S803	1-771-140-11	s	SWITCH, SLIDE
S804	1-771-140-11	s	SWITCH, SLIDE
S805	1-771-140-11	s	SWITCH, SLIDE
S806	1-771-140-11	s	SWITCH, SLIDE
S807	1-771-140-11	s	SWITCH, SLIDE
S808	1-771-141-11	s	SWITCH, SLIDE
S809	1-771-140-11	s	SWITCH, SLIDE
S810	1-570-909-21	s	SWITCH, PUSH
S811	1-570-711-11	s	SWITCH, SLIDE
X1	1-760-655-21	s	VIBRATOR, CRYSTAL
X2	1-760-655-21	s	VIBRATOR, CRYSTAL
X200	1-579-843-11	s	VIBRATOR, CRYSTAL
X201	1-760-458-11	s	VIBRATOR, CRYSTAL
X202	1-760-272-11	s	VIBRATOR, CRYSTAL

FP-118A BOARD

Ref. No. or Q'ty	Part No.	SP	Description
1pc	A-8329-963-A	s	MOUNTED CIRCUIT BOARD, FP-118A
1pc	3-604-372-01	o	SPACER LCD (ABS)
C1	1-126-394-11	s	CAPACITOR,ELECT 10MF/16V(CHIP)
C2	1-164-156-11	s	CAPACITOR,CERAMIC 0.1MF/25V F
C3	1-164-156-11	s	CAPACITOR,CERAMIC 0.1MF/25V F
C4	1-164-156-11	s	CAPACITOR,CERAMIC 0.1MF/25V F
C5	1-126-394-11	s	CAPACITOR,ELECT 10MF/16V(CHIP)
C7	1-126-394-11	s	CAPACITOR,ELECT 10MF/16V(CHIP)
C8	1-126-394-11	s	CAPACITOR,ELECT 10MF/16V(CHIP)
C9	1-164-156-11	s	CAPACITOR,CERAMIC 0.1MF/25V F
C10	1-164-315-11	s	CAPACITOR,CERAMIC 470PF/50V CH
C11	1-162-912-11	s	CAPACITOR,CERAMIC 7PF/50V 1608
C12	1-164-315-11	s	CAPACITOR,CERAMIC 470PF/50V CH
C13	1-162-912-11	s	CAPACITOR,CERAMIC 7PF/50V 1608
C14	1-162-912-11	s	CAPACITOR,CERAMIC 7PF/50V 1608
C15	1-164-156-11	s	CAPACITOR,CERAMIC 0.1MF/25V F
C16	1-164-156-11	s	CAPACITOR,CERAMIC 0.1MF/25V F
C17	1-162-912-11	s	CAPACITOR,CERAMIC 7PF/50V 1608
C18	1-126-394-11	s	CAPACITOR,ELECT 10MF/16V(CHIP)
C19	1-126-394-11	s	CAPACITOR,ELECT 10MF/16V(CHIP)
C20	1-164-156-11	s	CAPACITOR,CERAMIC 0.1MF/25V F
C21	1-164-156-11	s	CAPACITOR,CERAMIC 0.1MF/25V F
C200	1-164-156-11	s	CAPACITOR,CERAMIC 0.1MF/25V F
C201	1-126-394-11	s	CAPACITOR,ELECT 10MF/16V(CHIP)
C202	1-164-156-11	s	CAPACITOR,CERAMIC 0.1MF/25V F
C203	1-126-394-11	s	CAPACITOR,ELECT 10MF/16V(CHIP)
C204	1-162-918-11	s	CAPACITOR,CERAMIC 18PF/50V CH
C205	1-162-917-11	s	CAPACITOR,CERAMIC 15PF/50V CH
C206	1-162-918-11	s	CAPACITOR,CERAMIC 18PF/50V CH
C207	1-164-156-11	s	CAPACITOR,CERAMIC 0.1MF/25V F
C208	1-126-394-11	s	CAPACITOR,ELECT 10MF/16V(CHIP)
C209	1-126-397-11	s	CAPACITOR ELECT 33MF/25V(CHIP)
C210	1-126-397-11	s	CAPACITOR ELECT 33MF/25V(CHIP)
C211	1-164-156-11	s	CAPACITOR,CERAMIC 0.1MF/25V F
C212	1-164-156-11	s	CAPACITOR,CERAMIC 0.1MF/25V F
C213	1-164-739-11	s	CAPACITOR CERAMIC 560PF (1608)
C214	1-164-156-11	s	CAPACITOR,CERAMIC 0.1MF/25V F
C215	1-126-394-11	s	CAPACITOR,ELECT 10MF/16V(CHIP)
C216	1-164-315-11	s	CAPACITOR,CERAMIC 470PF/50V CH
C217	1-164-156-11	s	CAPACITOR,CERAMIC 0.1MF/25V F
C218	1-162-919-11	s	CAPACITOR,CERAMIC 22PF/50V CH
C219	1-162-919-11	s	CAPACITOR,CERAMIC 22PF/50V CH
C220	1-164-156-11	s	CAPACITOR,CERAMIC 0.1MF/25V F
C221	1-164-156-11	s	CAPACITOR,CERAMIC 0.1MF/25V F
C222	1-164-156-11	s	CAPACITOR,CERAMIC 0.1MF/25V F
C223	1-165-112-11	s	CAPACITOR,CERAMIC 0.33MF/16V F
C224	1-113-642-11	s	CAPACITOR, TANTALUM 47MF/10V
C225	1-164-730-11	s	CAPACITOR,CERAMIC 1200RF (M-)
C226	1-164-156-11	s	CAPACITOR,CERAMIC 0.1MF/25V F
C227	1-164-156-11	s	CAPACITOR,CERAMIC 0.1MF/25V F
C228	1-113-642-11	s	CAPACITOR, TANTALUM 47MF/10V
C229	1-164-156-11	s	CAPACITOR,CERAMIC 0.1MF/25V F
C300	1-164-156-11	s	CAPACITOR,CERAMIC 0.1MF/25V F
C301	1-126-394-11	s	CAPACITOR,ELECT 10MF/16V(CHIP)
C302	1-164-156-11	s	CAPACITOR,CERAMIC 0.1MF/25V F
C303	1-164-156-11	s	CAPACITOR,CERAMIC 0.1MF/25V F
C304	1-126-394-11	s	CAPACITOR,ELECT 10MF/16V(CHIP)
C305	1-126-392-11	s	CAPACITOR,CHIP ELECT100MF/6.3V

(FP-118A BOARD)

Ref. No. or Q'ty	Part No.	SP	Description
C306	1-126-394-11	s	CAPACITOR,ELECT 10MF/16V(CHIP)
C307	1-126-402-11	s	CAPACITOR, ELECT 2.2MF/50V
C308	1-164-156-11	s	CAPACITOR,CERAMIC 0.1MF/25V F
C309	1-126-402-11	s	CAPACITOR, ELECT 2.2MF/50V
C310	1-164-227-11	s	CAPACITOR,CERAMIC 0.022MF/25V
C311	1-162-970-11	s	CAPACITOR CERAMIC 0.01MF/25V B
C312	1-126-395-11	s	CAPACITOR,ELECT 22MF/16V(CHIP)
C313	1-164-227-11	s	CAPACITOR,CERAMIC 0.022MF/25V
C314	1-164-227-11	s	CAPACITOR,CERAMIC 0.022MF/25V
C315	1-164-156-11	s	CAPACITOR,CERAMIC 0.1MF/25V F
C316	1-164-156-11	s	CAPACITOR,CERAMIC 0.1MF/25V F
C317	1-164-156-11	s	CAPACITOR,CERAMIC 0.1MF/25V F
C318	1-164-315-11	s	CAPACITOR,CERAMIC 470PF/50V CH
C401	1-162-915-11	s	CAPACITOR,CERAMIC 10PF/50V CH
C402	1-162-915-11	s	CAPACITOR,CERAMIC 10PF/50V CH
C403	1-162-915-11	s	CAPACITOR,CERAMIC 10PF/50V CH
C404	1-162-915-11	s	CAPACITOR,CERAMIC 10PF/50V CH
C405	1-164-227-11	s	CAPACITOR,CERAMIC 0.022MF/25V
C406	1-164-227-11	s	CAPACITOR,CERAMIC 0.022MF/25V
C407	1-164-227-11	s	CAPACITOR,CERAMIC 0.022MF/25V
C408	1-164-227-11	s	CAPACITOR,CERAMIC 0.022MF/25V
C409	1-115-581-11	s	CAPACITOR CHIP ELECT 100MF/16V
C410	1-115-581-11	s	CAPACITOR CHIP ELECT 100MF/16V
C411	1-162-915-11	s	CAPACITOR,CERAMIC 10PF/50V CH
C412	1-162-915-11	s	CAPACITOR,CERAMIC 10PF/50V CH
C413	1-162-964-11	s	CAPACITOR,CERAMIC 1000PF/50V B
C414	1-164-227-11	s	CAPACITOR,CERAMIC 0.022MF/25V
C415	1-164-227-11	s	CAPACITOR,CERAMIC 0.022MF/25V
C416	1-164-227-11	s	CAPACITOR,CERAMIC 0.022MF/25V
C417	1-164-227-11	s	CAPACITOR,CERAMIC 0.022MF/25V
C418	1-162-964-11	s	CAPACITOR,CERAMIC 1000PF/50V B
C419	1-162-915-11	s	CAPACITOR,CERAMIC 10PF/50V CH
C420	1-162-915-11	s	CAPACITOR,CERAMIC 10PF/50V CH
C421	1-164-156-11	s	CAPACITOR,CERAMIC 0.1MF/25V F
C422	1-115-581-11	s	CAPACITOR CHIP ELECT 100MF/16V
C423	1-162-921-11	s	CAPACITOR,CERAMIC 33PF/50V CH
C424	1-162-921-11	s	CAPACITOR,CERAMIC 33PF/50V CH
C425	1-113-642-11	s	CAPACITOR, TANTALUM 47MF/10V
C426	1-113-642-11	s	CAPACITOR, TANTALUM 47MF/10V
C427	1-164-156-11	s	CAPACITOR,CERAMIC 0.1MF/25V F
C428	1-126-394-11	s	CAPACITOR,ELECT 10MF/16V(CHIP)
C429	1-126-394-11	s	CAPACITOR,ELECT 10MF/16V(CHIP)
C430	1-162-923-11	s	CAPACITOR,CERAMIC 47PF/50V CH
C431	1-162-923-11	s	CAPACITOR,CERAMIC 47PF/50V CH
C434	1-104-851-11	s	CAPACITOR,TANTALUM 10MF/10V
C435	1-104-851-11	s	CAPACITOR,TANTALUM 10MF/10V
C436	1-135-210-11	s	CAPACITOR,TANTALUM 4.7MF/10V
C437	1-135-210-11	s	CAPACITOR,TANTALUM 4.7MF/10V
C438	1-104-851-11	s	CAPACITOR,TANTALUM 10MF/10V
C439	1-104-851-11	s	CAPACITOR,TANTALUM 10MF/10V
C440	1-113-642-11	s	CAPACITOR, TANTALUM 47MF/10V
C441	1-113-642-11	s	CAPACITOR, TANTALUM 47MF/10V
C442	1-126-393-11	s	CAPACITOR ELECT 33MF/10V(CHIP)
C443	1-115-581-11	s	CAPACITOR CHIP ELECT 100MF/16V
C444	1-115-581-11	s	CAPACITOR CHIP ELECT 100MF/16V
C445	1-115-154-11	s	CAPACITOR ELECT 10MF/16V(BP)
C446	1-115-154-11	s	CAPACITOR ELECT 10MF/16V(BP)
C447	1-164-227-11	s	CAPACITOR,CERAMIC 0.022MF/25V
C448	1-164-227-11	s	CAPACITOR,CERAMIC 0.022MF/25V

(FP-118A BOARD)

Ref. No. or Q'ty	Part No.	SP	Description
C449	1-164-227-11	s	CAPACITOR,CERAMIC 0.022MF/25V
C451	1-164-227-11	s	CAPACITOR,CERAMIC 0.022MF/25V
C453	1-164-227-11	s	CAPACITOR,CERAMIC 0.022MF/25V
C454	1-164-227-11	s	CAPACITOR,CERAMIC 0.022MF/25V
C455	1-164-227-11	s	CAPACITOR,CERAMIC 0.022MF/25V
C456	1-164-227-11	s	CAPACITOR,CERAMIC 0.022MF/25V
C457	1-164-227-11	s	CAPACITOR,CERAMIC 0.022MF/25V
C601	1-162-915-11	s	CAPACITOR,CERAMIC 10PF/50V CH
C602	1-162-915-11	s	CAPACITOR,CERAMIC 10PF/50V CH
C603	1-162-915-11	s	CAPACITOR,CERAMIC 10PF/50V CH
C604	1-162-915-11	s	CAPACITOR,CERAMIC 10PF/50V CH
C605	1-162-915-11	s	CAPACITOR,CERAMIC 10PF/50V CH
C606	1-113-682-11	s	CAPACITOR,TANTALUM 33MF/10V
C607	1-113-682-11	s	CAPACITOR,TANTALUM 33MF/10V
C608	1-162-915-11	s	CAPACITOR,CERAMIC 10PF/50V CH
C609	1-104-852-11	s	CAPACITOR,TANTALUM 22MF/10V
C610	1-115-581-11	s	CAPACITOR CHIP ELECT 100MF/16V
C611	1-164-227-11	s	CAPACITOR,CERAMIC 0.022MF/25V
C613	1-164-156-11	s	CAPACITOR,CERAMIC 0.1MF/25V F
C614	1-126-393-11	s	CAPACITOR ELECT 33MF/10V(CHIP)
C615	1-164-156-11	s	CAPACITOR,CERAMIC 0.1MF/25V F
C616	1-126-393-11	s	CAPACITOR ELECT 33MF/10V(CHIP)
C617	1-113-642-11	s	CAPACITOR, TANTALUM 47MF/10V
C618	1-126-395-11	s	CAPACITOR,ELECT 22MF/16V(CHIP)
C619	1-126-412-11	s	CAPACITOR,ELECT 220MF/4V(CHIP)
C620	1-165-176-11	s	CAPACITOR,CERAMIC 47000PF/16V
C621	1-115-581-11	s	CAPACITOR CHIP ELECT 100MF/16V
C622	1-115-581-11	s	CAPACITOR CHIP ELECT 100MF/16V
C623	1-126-394-11	s	CAPACITOR,ELECT 10MF/16V(CHIP)
C624	1-164-346-11	s	CAPACITOR CHIP CERAMIC 1MF/16V
C625	1-164-156-11	s	CAPACITOR,CERAMIC 0.1MF/25V F
C706	1-126-394-11	s	CAPACITOR,ELECT 10MF/16V(CHIP)
C707	1-126-394-11	s	CAPACITOR,ELECT 10MF/16V(CHIP)
C718	1-164-156-11	s	CAPACITOR,CERAMIC 0.1MF/25V F
C719	1-164-156-11	s	CAPACITOR,CERAMIC 0.1MF/25V F
C801	1-126-394-11	s	CAPACITOR,ELECT 10MF/16V(CHIP)
C802	1-162-970-11	s	CAPACITOR CERAMIC 0.01MF/25V B
C804	1-162-970-11	s	CAPACITOR CERAMIC 0.01MF/25V B
C806	1-115-581-11	s	CAPACITOR CHIP ELECT 100MF/16V
C807	1-115-581-11	s	CAPACITOR CHIP ELECT 100MF/16V
CN1	1-778-652-11	o	CONNECTOR, FFC (ZIF) 50P
CN2	1-778-652-11	o	CONNECTOR, FFC (ZIF) 50P
CN3	1-778-651-11	o	CONNECTOR, FFC (ZIF) 40P
CN4	1-695-931-11	o	CONNECTOR, FPC (10P)
CN5	1-580-056-21	o	PIN,CONNECTOR 3P
CN6	1-580-056-21	o	PIN,CONNECTOR 3P
CN8	1-695-931-11	o	CONNECTOR, FPC (10P)
CV200	1-141-345-11	s	CAPACITOR,TRIMMER(CHIP) 40PF
D1	8-719-059-49	s	LED EBR3368S
D200	8-719-938-72	s	DIODE SB01-05CP (RECTI)
D201	8-719-106-31	s	DIODE RD8.2M-B1
D202	8-719-105-90	s	DIODE RD5.6M-B1
D203	8-719-106-61	s	DIODE RD11M-B1
D204	8-719-105-90	s	DIODE RD5.6M-B1
D205	8-719-059-52	s	DIODE MA3J14300LSO
D206	8-719-059-52	s	DIODE MA3J14300LSO
D207	8-719-105-28	s	DIODE RD2.4M-B
D208	8-719-105-28	s	DIODE RD2.4M-B

(FP-118A BOARD)

Ref. No. or Q'ty	Part No.	SP	Description
D209	8-719-987-41	s	LED CL-150Y-CD
D210	8-719-987-41	s	LED CL-150Y-CD
D211	8-719-987-41	s	LED CL-150Y-CD
D212	8-719-987-41	s	LED CL-150Y-CD
D213	8-719-987-41	s	LED CL-150Y-CD
D214	8-719-987-41	s	LED CL-150Y-CD
D215	8-719-987-41	s	LED CL-150Y-CD
D216	8-719-987-41	s	LED CL-150Y-CD
D217	8-719-820-41	s	DIODE 1SS302
D300	8-719-938-72	s	DIODE SB01-05CP (RECTI)
D301	8-719-938-72	s	DIODE SB01-05CP (RECTI)
D302	8-719-938-72	s	DIODE SB01-05CP (RECTI)
D303	8-719-059-51	s	DIODE MA3J142E0LSO
D401	8-719-059-52	s	DIODE MA3J14300LSO
D402	8-719-059-52	s	DIODE MA3J14300LSO
D403	8-719-059-52	s	DIODE MA3J14300LSO
D501	8-719-059-52	s	DIODE MA3J14300LSO
D502	8-719-801-78	s	DIODE 1SS184
D503	8-719-801-78	s	DIODE 1SS184
D504	8-719-801-78	s	DIODE 1SS184
D605	8-719-820-41	s	DIODE 1SS302
D703	8-719-820-41	s	DIODE 1SS302
D704	8-719-820-41	s	DIODE 1SS302
D801	8-719-941-86	s	DIODE DAN202U
E1	1-535-757-11	s	CHIP, CHECKER (CONNECTOR)
E2	1-535-757-11	s	CHIP, CHECKER (CONNECTOR)
E401	1-535-757-11	s	CHIP, CHECKER (CONNECTOR)
E501	1-535-757-11	s	CHIP, CHECKER (CONNECTOR)
F801	1-576-122-21	s	CIRCUIT PROTECTOR 0.4A(IC LINK
FB801	1-414-135-11	s	MICRO INDUCTOR (CHIP)21A10
IC2	8-759-327-65	s	IC CXD8525N (E2)
IC4	8-759-674-43	s	IC MM74HCT244SJX
IC6	8-759-524-04	s	IC TC74VHC125FT (EL)
IC200	6-801-427-01	s	IC UPD78064GF-201-3BA
IC201	8-759-175-77	s	IC CXD8384Q
IC202	8-759-289-80	s	IC LC75821W-DS
IC203	8-759-442-54	s	IC RH5RL50AA-T1
IC204	8-759-464-95	s	IC AK6420AF-E2
IC205	8-759-035-93	s	IC SC7S32F
IC206	8-759-209-57	s	IC TC4S69F
IC207	8-759-669-45	s	IC TL062CPWR-12
IC208	8-759-745-64	s	IC NJM4560M
IC209	8-759-082-60	s	IC TC7S66FU
IC210	8-759-058-64	s	IC TC7S32FU-TE85R
IC300	8-759-087-73	s	IC S-80745AN-D9-S
IC301	8-759-504-40	s	IC S80741AL-A5
IC302	8-759-442-54	s	IC RH5RL50AA-T1
IC303	8-759-442-54	s	IC RH5RL50AA-T1
IC401	8-759-422-21	s	IC NJM4580VTE2
IC403	8-759-422-21	s	IC NJM4580VTE2
IC404	8-759-422-21	s	IC NJM4580VTE2
IC405	8-759-422-21	s	IC NJM4580VTE2
IC406	8-759-082-61	s	IC TC4W53FU
IC407	8-759-082-61	s	IC TC4W53FU
IC408	8-759-701-01	s	IC NJM2904M
IC409	8-759-111-56	s	IC UPC4572G2
IC410	8-759-111-56	s	IC UPC4572G2

(FP-118A BOARD)

Ref. No. or Q'ty	Part No.	SP	Description
IC411	8-759-422-21	s	IC NJM4580VTE2
IC412	8-759-422-21	s	IC NJM4580VTE2
IC413	8-759-422-21	s	IC NJM4580VTE2
IC414	8-759-422-21	s	IC NJM4580VTE2
IC415	8-759-431-95	s	IC S-81230SGUP-DQB-T1
IC416	8-759-422-21	s	IC NJM4580VTE2
IC601	8-759-745-64	s	IC NJM4560M
IC602	8-759-745-64	s	IC NJM4560M
IC605	8-759-530-28	s	IC TC4066BFT
IC606	8-759-745-64	s	IC NJM4560M
IC607	8-759-431-97	s	IC NJM386M(TE2)
IC701	8-759-194-97	s	IC NJM4560M-D(TE2)
IC705	8-759-530-05	s	IC TC4053BFT (EL.N)
IC801	8-759-058-62	s	IC TC7S08FU-TE85R
IC802	8-759-058-58	s	IC TC7S04FU-TE85R
IC803	8-759-236-51	s	IC TC74HC165AF (EL)
IC804	8-759-236-51	s	IC TC74HC165AF (EL)
L1	1-410-381-11	s	INDUCTOR,CHIP 10UH (3225)
L2	1-410-381-11	s	INDUCTOR,CHIP 10UH (3225)
L3	1-410-381-11	s	INDUCTOR,CHIP 10UH (3225)
L200	1-410-393-11	s	INDUCTOR,CHIP 100UH (3225)
L300	1-410-381-11	s	INDUCTOR,CHIP 10UH (3225)
L301	1-410-381-11	s	INDUCTOR,CHIP 10UH (3225)
L501	1-412-282-41	s	INDUCTOR,CHIP 470UH (3225)
L601	1-414-402-11	s	INDUCTOR (SMD) 47UH
L701	1-412-955-11	s	INDUCTOR 22UH (2520)
LI300	1-550-414-31	s	HOLDER, BATTERY
ND200	1-801-621-21	o	DISPLAY, LCD
PH401	1-808-252-11	s	PHOTO COUPLER M30
Q1	8-729-106-60	s	TRANSISTOR 2SB1115A
Q2	8-729-042-52	s	TRANSISTOR IMT1AT108
Q3	8-729-029-14	s	TRANSISTOR DTC144EUA-T106
Q4	8-729-028-91	s	TRANSISTOR DTA144EUA-T106
Q5	8-729-028-91	s	TRANSISTOR DTA144EUA-T106
Q6	8-729-929-73	s	TRANSISTOR UMG8-TL
Q7	8-729-029-14	s	TRANSISTOR DTC144EUA-T106
Q8	8-729-929-73	s	TRANSISTOR UMG8-TL
Q9	8-729-929-52	s	TRANSISTOR UMA9-TR
Q10	8-729-927-74	s	TRANSISTOR UMG2
Q11	8-729-028-73	s	TRANSISTOR DTA114EUA-T106
Q12	8-729-029-14	s	TRANSISTOR DTC144EUA-T106
Q13	8-729-029-14	s	TRANSISTOR DTC144EUA-T106
Q201	8-729-029-14	s	TRANSISTOR DTC144EUA-T106
Q202	8-729-029-14	s	TRANSISTOR DTC144EUA-T106
Q203	8-729-905-35	s	TRANSISTOR 2SC4081-R
Q204	8-729-905-35	s	TRANSISTOR 2SC4081-R
Q205	8-729-028-91	s	TRANSISTOR DTA144EUA-T106
Q300	8-729-029-14	s	TRANSISTOR DTC144EUA-T106
Q301	8-729-029-14	s	TRANSISTOR DTC144EUA-T106
Q302	8-729-026-53	s	TRANSISTOR 2SA1576A-T106-QR
Q303	8-729-142-90	s	TRANSISTOR 2SK853-K5
Q304	8-729-042-52	s	TRANSISTOR IMT1AT108
Q305	8-729-905-35	s	TRANSISTOR 2SC4081-R
Q306	8-729-907-26	s	TRANSISTOR IMX1
Q307	8-729-042-52	s	TRANSISTOR IMT1AT108
Q308	8-729-029-14	s	TRANSISTOR DTC144EUA-T106

(FP-118A BOARD)

Ref. No. or Q'ty	Part No.	SP	Description
Q401	8-729-014-86	s	TRANSISTOR 2SC4207-YGR-TE85L
Q402	8-729-014-86	s	TRANSISTOR 2SC4207-YGR-TE85L
Q403	8-729-905-35	s	TRANSISTOR 2SC4081-R
Q404	8-729-026-53	s	TRANSISTOR 2SA1576A-T106-QR
Q405	8-729-026-53	s	TRANSISTOR 2SA1576A-T106-QR
Q406	8-729-905-35	s	TRANSISTOR 2SC4081-R
Q407	8-729-905-35	s	TRANSISTOR 2SC4081-R
Q408	8-729-905-35	s	TRANSISTOR 2SC4081-R
Q409	8-729-905-35	s	TRANSISTOR 2SC4081-R
Q410	8-729-905-35	s	TRANSISTOR 2SC4081-R
Q411	8-729-905-35	s	TRANSISTOR 2SC4081-R
Q412	8-729-905-35	s	TRANSISTOR 2SC4081-R
Q413	8-729-905-35	s	TRANSISTOR 2SC4081-R
Q414	8-729-905-35	s	TRANSISTOR 2SC4081-R
Q415	8-729-905-35	s	TRANSISTOR 2SC4081-R
Q501	8-729-029-14	s	TRANSISTOR DTC144EUA-T106
Q502	6-550-002-01	s	TRANSISTOR IMB2AT110
Q504	8-729-209-07	s	TRANSISTOR 2SC4213-B
Q505	8-729-209-07	s	TRANSISTOR 2SC4213-B
Q506	8-729-026-53	s	TRANSISTOR 2SA1576A-T106-QR
Q507	8-729-026-53	s	TRANSISTOR 2SA1576A-T106-QR
Q508	8-729-141-75	s	TRANSISTOR 2SD596DV345
Q509	8-729-026-53	s	TRANSISTOR 2SA1576A-T106-QR
Q510	8-729-141-48	s	TRANSISTOR 2SB624-BV345
Q511	8-729-029-14	s	TRANSISTOR DTC144EUA-T106
Q512	8-729-141-75	s	TRANSISTOR 2SD596DV345
Q513	8-729-029-14	s	TRANSISTOR DTC144EUA-T106
Q514	8-729-141-75	s	TRANSISTOR 2SD596DV345
Q515	8-729-029-14	s	TRANSISTOR DTC144EUA-T106
Q516	8-729-209-07	s	TRANSISTOR 2SC4213-B
Q701	8-729-209-07	s	TRANSISTOR 2SC4213-B
Q702	8-729-209-07	s	TRANSISTOR 2SC4213-B
Q801	8-729-029-14	s	TRANSISTOR DTC144EUA-T106
Q802	8-729-029-14	s	TRANSISTOR DTC144EUA-T106
Q803	8-729-101-07	s	TRANSISTOR 2SB798
Q804	8-729-140-63	s	TRANSISTOR 2SA1611-M5M6
R1	1-216-849-11	s	RESISTOR,CHIP 220K 1/16W 1608
R2	1-216-845-11	s	RESISTOR,CHIP 100K 1/16W(1608)
R3	1-216-849-11	s	RESISTOR,CHIP 220K 1/16W 1608
R4	1-216-845-11	s	RESISTOR,CHIP 100K 1/16W(1608)
R5	1-216-845-11	s	RESISTOR,CHIP 100K 1/16W(1608)
R6	1-216-845-11	s	RESISTOR,CHIP 100K 1/16W(1608)
R7	1-216-845-11	s	RESISTOR,CHIP 100K 1/16W(1608)
R8	1-216-827-11	s	RESISTOR, CHIP 3.3K 1/16W 1608
R9	1-216-797-11	s	RESISTOR,CHIP 10 1/16W 1608
R10	1-216-797-11	s	RESISTOR,CHIP 10 1/16W 1608
R11	1-216-797-11	s	RESISTOR,CHIP 10 1/16W 1608
R12	1-216-849-11	s	RESISTOR,CHIP 220K 1/16W 1608
R13	1-216-825-11	s	RESISTOR,CHIP 2.2K 1/16W 1608
R14	1-216-829-11	s	RESISTOR,CHIP 4.7K 1/16W(1608)
R15	1-216-823-11	s	RESISTOR, CHIP 1.5K 1/16W
R16	1-216-830-11	s	RESISTOR,CHIP 5.6K 1/16W 1608
R17	1-216-845-11	s	RESISTOR,CHIP 100K 1/16W(1608)
R18	1-216-821-11	s	RESISTOR,CHIP 1.0K 1/16W(1608)
R19	1-216-821-11	s	RESISTOR,CHIP 1.0K 1/16W(1608)
R20	1-216-821-11	s	RESISTOR,CHIP 1.0K 1/16W(1608)
R21	1-216-821-11	s	RESISTOR,CHIP 1.0K 1/16W(1608)
R22	1-216-821-11	s	RESISTOR,CHIP 1.0K 1/16W(1608)

(FP-118A BOARD)

Ref. No. or Q'ty	Part No.	SP	Description
R23	1-216-821-11	s	RESISTOR,CHIP 1.0K 1/16W(1608)
R24	1-216-821-11	s	RESISTOR,CHIP 1.0K 1/16W(1608)
R25	1-216-821-11	s	RESISTOR,CHIP 1.0K 1/16W(1608)
R26	1-216-821-11	s	RESISTOR,CHIP 1.0K 1/16W(1608)
R27	1-216-827-11	s	RESISTOR, CHIP 3.3K 1/16W 1608
R28	1-216-827-11	s	RESISTOR, CHIP 3.3K 1/16W 1608
R29	1-216-809-11	s	RESISTOR,CHIP 100 1/16W 1608
R30	1-216-809-11	s	RESISTOR,CHIP 100 1/16W 1608
R31	1-216-864-11	s	CONDUCTOR, CHIP (1608)
R32	1-216-864-11	s	CONDUCTOR, CHIP (1608)
R33	1-216-849-11	s	RESISTOR,CHIP 220K 1/16W 1608
R34	1-216-821-11	s	RESISTOR,CHIP 1.0K 1/16W(1608)
R35	1-216-845-11	s	RESISTOR,CHIP 100K 1/16W(1608)
R36	1-216-821-11	s	RESISTOR,CHIP 1.0K 1/16W(1608)
R37	1-216-864-11	s	CONDUCTOR, CHIP (1608)
R38	1-216-857-11	s	RESISTOR,CHIP 1M 1/16W(1608)
R39	1-216-849-11	s	RESISTOR,CHIP 220K 1/16W 1608
R40	1-216-864-11	s	CONDUCTOR, CHIP (1608)
R41	1-216-821-11	s	RESISTOR,CHIP 1.0K 1/16W(1608)
R42	1-216-821-11	s	RESISTOR,CHIP 1.0K 1/16W(1608)
R43	1-216-821-11	s	RESISTOR,CHIP 1.0K 1/16W(1608)
R44	1-216-849-11	s	RESISTOR,CHIP 220K 1/16W 1608
R45	1-216-849-11	s	RESISTOR,CHIP 220K 1/16W 1608
R47	1-216-849-11	s	RESISTOR,CHIP 220K 1/16W 1608
R48	1-216-845-11	s	RESISTOR,CHIP 100K 1/16W(1608)
R49	1-216-857-11	s	RESISTOR,CHIP 1M 1/16W(1608)
R50	1-216-821-11	s	RESISTOR,CHIP 1.0K 1/16W(1608)
R51	1-216-849-11	s	RESISTOR,CHIP 220K 1/16W 1608
R52	1-216-845-11	s	RESISTOR,CHIP 100K 1/16W(1608)
R53	1-216-849-11	s	RESISTOR,CHIP 220K 1/16W 1608
R54	1-216-809-11	s	RESISTOR,CHIP 100 1/16W 1608
R55	1-216-849-11	s	RESISTOR,CHIP 220K 1/16W 1608
R56	1-216-849-11	s	RESISTOR,CHIP 220K 1/16W 1608
R57	1-216-849-11	s	RESISTOR,CHIP 220K 1/16W 1608
R58	1-216-833-11	s	RESISTOR,CHIP 10K 1/16W (1608)
R59	1-216-833-11	s	RESISTOR,CHIP 10K 1/16W (1608)
R60	1-216-816-11	s	RESISTOR, CHIP 390 1/16W 1608
R61	1-216-809-11	s	RESISTOR,CHIP 100 1/16W 1608
R62	1-216-809-11	s	RESISTOR,CHIP 100 1/16W 1608
R63	1-216-849-11	s	RESISTOR,CHIP 220K 1/16W 1608
R64	1-216-849-11	s	RESISTOR,CHIP 220K 1/16W 1608
R65	1-216-841-11	s	RESISTOR, CHIP 47K 1/16W 1608
R66	1-216-845-11	s	RESISTOR,CHIP 100K 1/16W(1608)
R67	1-216-815-11	s	RESISTOR,CHIP 330 1/16W 1608
R68	1-216-815-11	s	RESISTOR,CHIP 330 1/16W 1608
R69	1-216-815-11	s	RESISTOR,CHIP 330 1/16W 1608
R70	1-216-817-11	s	RESISTOR,CHIP 470 1/16W 1608
R71	1-216-815-11	s	RESISTOR,CHIP 330 1/16W 1608
R72	1-216-820-11	s	RESISTOR, CHIP 820 1/16W 1608
R73	1-216-833-11	s	RESISTOR,CHIP 10K 1/16W (1608)
R74	1-216-821-11	s	RESISTOR,CHIP 1.0K 1/16W(1608)
R75	1-216-821-11	s	RESISTOR,CHIP 1.0K 1/16W(1608)
R76	1-216-821-11	s	RESISTOR,CHIP 1.0K 1/16W(1608)
R77	1-216-821-11	s	RESISTOR,CHIP 1.0K 1/16W(1608)
R78	1-216-821-11	s	RESISTOR,CHIP 1.0K 1/16W(1608)
R79	1-216-821-11	s	RESISTOR,CHIP 1.0K 1/16W(1608)
R80	1-216-821-11	s	RESISTOR,CHIP 1.0K 1/16W(1608)
R81	1-216-821-11	s	RESISTOR,CHIP 1.0K 1/16W(1608)
R82	1-216-821-11	s	RESISTOR,CHIP 1.0K 1/16W(1608)

(FP-118A BOARD)

Ref. No. or Q'ty	Part No.	SP	Description
R83	1-216-821-11	s	RESISTOR,CHIP 1.0K 1/16W(1608)
R84	1-216-817-11	s	RESISTOR,CHIP 470 1/16W 1608
R85	1-216-817-11	s	RESISTOR,CHIP 470 1/16W 1608
R86	1-216-817-11	s	RESISTOR,CHIP 470 1/16W 1608
R87	1-216-817-11	s	RESISTOR,CHIP 470 1/16W 1608
R88	1-216-821-11	s	RESISTOR,CHIP 1.0K 1/16W(1608)
R89	1-216-821-11	s	RESISTOR,CHIP 1.0K 1/16W(1608)
R90	1-216-821-11	s	RESISTOR,CHIP 1.0K 1/16W(1608)
R91	1-216-841-11	s	RESISTOR, CHIP 47K 1/16W 1608
R92	1-216-849-11	s	RESISTOR,CHIP 220K 1/16W 1608
R93	1-216-809-11	s	RESISTOR,CHIP 100 1/16W 1608
R94	1-216-809-11	s	RESISTOR,CHIP 100 1/16W 1608
R95	1-216-809-11	s	RESISTOR,CHIP 100 1/16W 1608
R200	1-216-821-11	s	RESISTOR,CHIP 1.0K 1/16W(1608)
R201	1-216-849-11	s	RESISTOR,CHIP 220K 1/16W 1608
R202	1-216-821-11	s	RESISTOR,CHIP 1.0K 1/16W(1608)
R203	1-216-849-11	s	RESISTOR,CHIP 220K 1/16W 1608
R204	1-216-821-11	s	RESISTOR,CHIP 1.0K 1/16W(1608)
R205	1-216-849-11	s	RESISTOR,CHIP 220K 1/16W 1608
R206	1-216-821-11	s	RESISTOR,CHIP 1.0K 1/16W(1608)
R207	1-216-851-11	s	RESISTOR,CHIP 330K 1/16W 1608
R208	1-216-849-11	s	RESISTOR,CHIP 220K 1/16W 1608
R209	1-216-849-11	s	RESISTOR,CHIP 220K 1/16W 1608
R210	1-216-849-11	s	RESISTOR,CHIP 220K 1/16W 1608
R211	1-216-821-11	s	RESISTOR,CHIP 1.0K 1/16W(1608)
R212	1-216-849-11	s	RESISTOR,CHIP 220K 1/16W 1608
R213	1-216-849-11	s	RESISTOR,CHIP 220K 1/16W 1608
R214	1-216-849-11	s	RESISTOR,CHIP 220K 1/16W 1608
R215	1-216-809-11	s	RESISTOR,CHIP 100 1/16W 1608
R216	1-216-861-11	s	RESISTOR,CHIP 2.2M 1/16W 1608
R217	1-216-837-11	s	RESISTOR,CHIP 22K 1/16W 1608
R218	1-216-837-11	s	RESISTOR,CHIP 22K 1/16W 1608
R219	1-216-849-11	s	RESISTOR,CHIP 220K 1/16W 1608
R220	1-216-827-11	s	RESISTOR, CHIP 3.3K 1/16W 1608
R221	1-216-821-11	s	RESISTOR,CHIP 1.0K 1/16W(1608)
R222	1-216-838-11	s	RESISTOR CHIP 27K 1/16W(1608)
R223	1-216-827-11	s	RESISTOR, CHIP 3.3K 1/16W 1608
R224	1-216-821-11	s	RESISTOR,CHIP 1.0K 1/16W(1608)
R225	1-216-838-11	s	RESISTOR CHIP 27K 1/16W(1608)
R226	1-216-864-11	s	CONDUCTOR, CHIP (1608)
R227	1-216-821-11	s	RESISTOR,CHIP 1.0K 1/16W(1608)
R228	1-216-821-11	s	RESISTOR,CHIP 1.0K 1/16W(1608)
R229	1-216-821-11	s	RESISTOR,CHIP 1.0K 1/16W(1608)
R230	1-216-849-11	s	RESISTOR,CHIP 220K 1/16W 1608
R231	1-216-849-11	s	RESISTOR,CHIP 220K 1/16W 1608
R232	1-216-821-11	s	RESISTOR,CHIP 1.0K 1/16W(1608)
R233	1-216-849-11	s	RESISTOR,CHIP 220K 1/16W 1608
R234	1-216-821-11	s	RESISTOR,CHIP 1.0K 1/16W(1608)
R235	1-216-821-11	s	RESISTOR,CHIP 1.0K 1/16W(1608)
R236	1-216-821-11	s	RESISTOR,CHIP 1.0K 1/16W(1608)
R237	1-216-833-11	s	RESISTOR,CHIP 10K 1/16W (1608)
R238	1-216-849-11	s	RESISTOR,CHIP 220K 1/16W 1608
R239	1-218-890-11	s	RESISTOR, CHIP 62K 1/16W(1608)
R240	1-216-821-11	s	RESISTOR,CHIP 1.0K 1/16W(1608)
R241	1-216-845-11	s	RESISTOR,CHIP 100K 1/16W(1608)
R242	1-216-833-11	s	RESISTOR,CHIP 10K 1/16W (1608)
R243	1-216-845-11	s	RESISTOR,CHIP 100K 1/16W(1608)
R244	1-216-849-11	s	RESISTOR,CHIP 220K 1/16W 1608
R245	1-216-849-11	s	RESISTOR,CHIP 220K 1/16W 1608

(FP-118A BOARD)

Ref. No. or Q'ty	Part No.	SP	Description
R246	1-216-864-11	s	CONDUCTOR, CHIP (1608)
R247	1-216-857-11	s	RESISTOR,CHIP 1M 1/16W(1608)
R248	1-216-815-11	s	RESISTOR,CHIP 330 1/16W 1608
R249	1-216-845-11	s	RESISTOR,CHIP 100K 1/16W(1608)
R250	1-216-857-11	s	RESISTOR,CHIP 1M 1/16W(1608)
R251	1-216-841-11	s	RESISTOR, CHIP 47K 1/16W 1608
R252	1-216-849-11	s	RESISTOR,CHIP 220K 1/16W 1608
R253	1-216-845-11	s	RESISTOR,CHIP 100K 1/16W(1608)
R254	1-216-845-11	s	RESISTOR,CHIP 100K 1/16W(1608)
R255	1-216-839-11	s	RESISTOR,CHIP 33K 1/16W 1608
R256	1-218-871-11	s	RESISTOR,CHIP 10K 1/16W (1608)
R257	1-218-882-11	s	RESISTOR, CHIP 30K 1/16W(1608)
R258	1-218-858-11	s	RESISTOR, CHIP 3K 1/16W (1608)
R259	1-218-851-11	s	RESISTOR,CHIP 1.5K 1/16W(1608)
R260	1-216-841-11	s	RESISTOR, CHIP 47K 1/16W 1608
R261	1-211-990-11	s	RESISTOR,CHIP 75 1/16W (1608)
R262	1-216-826-11	s	RESISTOR,CHIP 2.7K 1/16W(1608)
R263	1-216-826-11	s	RESISTOR,CHIP 2.7K 1/16W(1608)
R264	1-216-809-11	s	RESISTOR,CHIP 100 1/16W 1608
R265	1-216-826-11	s	RESISTOR,CHIP 2.7K 1/16W(1608)
R266	1-216-826-11	s	RESISTOR,CHIP 2.7K 1/16W(1608)
R267	1-216-809-11	s	RESISTOR,CHIP 100 1/16W 1608
R268	1-216-821-11	s	RESISTOR,CHIP 1.0K 1/16W(1608)
R269	1-218-880-11	s	RESISTOR,CHIP 24K 1/16W (1608)
R270	1-216-849-11	s	RESISTOR,CHIP 220K 1/16W 1608
R271	1-216-849-11	s	RESISTOR,CHIP 220K 1/16W 1608
R272	1-216-821-11	s	RESISTOR,CHIP 1.0K 1/16W(1608)
R273	1-216-821-11	s	RESISTOR,CHIP 1.0K 1/16W(1608)
R274	1-216-849-11	s	RESISTOR,CHIP 220K 1/16W 1608
R275	1-216-849-11	s	RESISTOR,CHIP 220K 1/16W 1608
R276	1-216-849-11	s	RESISTOR,CHIP 220K 1/16W 1608
R277	1-216-849-11	s	RESISTOR,CHIP 220K 1/16W 1608
R278	1-216-821-11	s	RESISTOR,CHIP 1.0K 1/16W(1608)
R279	1-216-821-11	s	RESISTOR,CHIP 1.0K 1/16W(1608)
R280	1-216-821-11	s	RESISTOR,CHIP 1.0K 1/16W(1608)
R281	1-216-821-11	s	RESISTOR,CHIP 1.0K 1/16W(1608)
R282	1-216-849-11	s	RESISTOR,CHIP 220K 1/16W 1608
R283	1-216-849-11	s	RESISTOR,CHIP 220K 1/16W 1608
R300	1-216-833-11	s	RESISTOR,CHIP 10K 1/16W (1608)
R301	1-216-843-11	s	RESISTOR,CHIP 68K 1/16W (1608)
R302	1-216-839-11	s	RESISTOR,CHIP 33K 1/16W 1608
R303	1-216-841-11	s	RESISTOR, CHIP 47K 1/16W 1608
R304	1-216-861-11	s	RESISTOR,CHIP 2.2M 1/16W 1608
R305	1-216-861-11	s	RESISTOR,CHIP 2.2M 1/16W 1608
R306	1-216-821-11	s	RESISTOR,CHIP 1.0K 1/16W(1608)
R307	1-216-809-11	s	RESISTOR,CHIP 100 1/16W 1608
R308	1-216-845-11	s	RESISTOR,CHIP 100K 1/16W(1608)
R309	1-216-845-11	s	RESISTOR,CHIP 100K 1/16W(1608)
R310	1-216-833-11	s	RESISTOR,CHIP 10K 1/16W (1608)
R311	1-216-851-11	s	RESISTOR,CHIP 330K 1/16W 1608
R312	1-216-845-11	s	RESISTOR,CHIP 100K 1/16W(1608)
R313	1-216-845-11	s	RESISTOR,CHIP 100K 1/16W(1608)
R314	1-216-845-11	s	RESISTOR,CHIP 100K 1/16W(1608)
R315	1-216-821-11	s	RESISTOR,CHIP 1.0K 1/16W(1608)
R316	1-216-852-11	s	RESISTOR,CHIP 390K 1/16W 1608
R317	1-216-845-11	s	RESISTOR,CHIP 100K 1/16W(1608)
R318	1-216-838-11	s	RESISTOR CHIP 27K 1/16W(1608)
R319	1-216-857-11	s	RESISTOR,CHIP 1M 1/16W(1608)
R320	1-216-857-11	s	RESISTOR,CHIP 1M 1/16W(1608)

(FP-118A BOARD)

Ref. No. or Q'ty	Part No.	SP	Description
R321	1-216-855-11	s	RESISTOR, CHIP 680K 1/16W 1608
R322	1-216-855-11	s	RESISTOR, CHIP 680K 1/16W 1608
R323	1-216-845-11	s	RESISTOR,CHIP 100K 1/16W(1608)
R324	1-216-841-11	s	RESISTOR, CHIP 47K 1/16W 1608
R325	1-216-841-11	s	RESISTOR, CHIP 47K 1/16W 1608
R326	1-216-797-11	s	RESISTOR,CHIP 10 1/16W 1608
R327	1-216-809-11	s	RESISTOR,CHIP 100 1/16W 1608
R328	1-216-809-11	s	RESISTOR,CHIP 100 1/16W 1608
R329	1-218-871-11	s	RESISTOR,CHIP 10K 1/16W (1608)
R330	1-216-821-11	s	RESISTOR,CHIP 1.0K 1/16W(1608)
R331	1-216-864-11	s	CONDUCTOR, CHIP (1608)
R332	1-216-849-11	s	RESISTOR,CHIP 220K 1/16W 1608
R333	1-216-845-11	s	RESISTOR,CHIP 100K 1/16W(1608)
R401	1-218-848-11	s	RESISTOR,CHIP 1.1K 1/16W(1608)
R402	1-218-848-11	s	RESISTOR,CHIP 1.1K 1/16W(1608)
R404	1-218-848-11	s	RESISTOR,CHIP 1.1K 1/16W(1608)
R405	1-218-848-11	s	RESISTOR,CHIP 1.1K 1/16W(1608)
R406	1-216-864-11	s	CONDUCTOR, CHIP (1608)
R407	1-218-855-11	s	RESISTOR,CHIP 2.2K 1/16W(1608)
R408	1-218-855-11	s	RESISTOR,CHIP 2.2K 1/16W(1608)
R412	1-218-855-11	s	RESISTOR,CHIP 2.2K 1/16W(1608)
R413	1-218-855-11	s	RESISTOR,CHIP 2.2K 1/16W(1608)
R414	1-216-829-11	s	RESISTOR,CHIP 4.7K 1/16W(1608)
R415	1-216-829-11	s	RESISTOR,CHIP 4.7K 1/16W(1608)
R416	1-216-864-11	s	CONDUCTOR, CHIP (1608)
R417	1-216-864-11	s	CONDUCTOR, CHIP (1608)
R420	1-218-872-11	s	RESISTOR,CHIP 11K 1/16W (1608)
R421	1-218-872-11	s	RESISTOR,CHIP 11K 1/16W (1608)
R423	1-218-879-11	s	RESISTOR,CHIP 22K 1/16W (1608)
R425	1-218-866-11	s	RESISTOR,CHIP 6.2K 1/16W(1608)
R426	1-218-847-11	s	RESISTOR, CHIP 1K 1/16W (1608)
R427	1-218-866-11	s	RESISTOR,CHIP 6.2K 1/16W(1608)
R428	1-218-847-11	s	RESISTOR, CHIP 1K 1/16W (1608)
R429	1-218-879-11	s	RESISTOR,CHIP 22K 1/16W (1608)
R430	1-218-863-11	s	RESISTOR,CHIP 4.7K 1/16W(1608)
R431	1-218-887-11	s	RESISTOR,CHIP 47K 1/16W (1608)
R432	1-218-887-11	s	RESISTOR,CHIP 47K 1/16W (1608)
R433	1-218-887-11	s	RESISTOR,CHIP 47K 1/16W (1608)
R434	1-218-887-11	s	RESISTOR,CHIP 47K 1/16W (1608)
R435	1-216-833-11	s	RESISTOR,CHIP 10K 1/16W (1608)
R436	1-216-809-11	s	RESISTOR,CHIP 100 1/16W 1608
R437	1-216-833-11	s	RESISTOR,CHIP 10K 1/16W (1608)
R438	1-216-845-11	s	RESISTOR,CHIP 100K 1/16W(1608)
R439	1-216-837-11	s	RESISTOR,CHIP 22K 1/16W 1608
R440	1-218-839-11	s	RESISTOR,CHIP 470 1/16W (1608)
R441	1-218-839-11	s	RESISTOR,CHIP 470 1/16W (1608)
R442	1-211-990-11	s	RESISTOR,CHIP 75 1/16W (1608)
R443	1-218-845-11	s	RESISTOR,CHIP 820 1/16W (1608)
R444	1-216-829-11	s	RESISTOR,CHIP 4.7K 1/16W(1608)
R445	1-218-871-11	s	RESISTOR,CHIP 10K 1/16W (1608)
R446	1-218-871-11	s	RESISTOR,CHIP 10K 1/16W (1608)
R447	1-216-864-11	s	CONDUCTOR, CHIP (1608)
R448	1-216-864-11	s	CONDUCTOR, CHIP (1608)
R451	1-216-833-11	s	RESISTOR,CHIP 10K 1/16W (1608)
R452	1-216-833-11	s	RESISTOR,CHIP 10K 1/16W (1608)
R453	1-216-821-11	s	RESISTOR,CHIP 1.0K 1/16W(1608)
R454	1-216-821-11	s	RESISTOR,CHIP 1.0K 1/16W(1608)
R455	1-216-829-11	s	RESISTOR,CHIP 4.7K 1/16W(1608)
R456	1-216-833-11	s	RESISTOR,CHIP 10K 1/16W (1608)

(FP-118A BOARD)

Ref. No. or Q'ty	Part No.	SP	Description
R457	1-216-829-11	s	RESISTOR,CHIP 4.7K 1/16W(1608)
R458	1-216-833-11	s	RESISTOR,CHIP 10K 1/16W (1608)
R459	1-216-801-11	s	RESISTOR,CHIP 22 1/16W (1608)
R460	1-216-801-11	s	RESISTOR,CHIP 22 1/16W (1608)
R461	1-216-833-11	s	RESISTOR,CHIP 10K 1/16W (1608)
R462	1-216-833-11	s	RESISTOR,CHIP 10K 1/16W (1608)
R463	1-218-885-11	s	RESISTOR,CHIP 39K 1/16W (1608)
R464	1-216-837-11	s	RESISTOR,CHIP 22K 1/16W 1608
R467	1-218-878-11	s	RESISTOR,CHIP 20K 1/16W (1608)
R468	1-218-839-11	s	RESISTOR,CHIP 470 1/16W (1608)
R469	1-218-878-11	s	RESISTOR,CHIP 20K 1/16W (1608)
R470	1-218-839-11	s	RESISTOR,CHIP 470 1/16W (1608)
R471	1-216-846-11	s	RESISTOR,CHIP 120K 1/16W (1608
R472	1-218-907-11	s	RESISTOR,CHIP 330K 1/16W(1608)
R474	1-218-863-11	s	RESISTOR,CHIP 4.7K 1/16W(1608)
R475	1-216-841-11	s	RESISTOR, CHIP 47K 1/16W 1608
R476	1-218-863-11	s	RESISTOR,CHIP 4.7K 1/16W(1608)
R477	1-216-841-11	s	RESISTOR, CHIP 47K 1/16W 1608
R478	1-218-871-11	s	RESISTOR,CHIP 10K 1/16W (1608)
R479	1-218-871-11	s	RESISTOR,CHIP 10K 1/16W (1608)
R480	1-216-833-11	s	RESISTOR,CHIP 10K 1/16W (1608)
R481	1-216-833-11	s	RESISTOR,CHIP 10K 1/16W (1608)
R482	1-218-878-11	s	RESISTOR,CHIP 20K 1/16W (1608)
R483	1-218-878-11	s	RESISTOR,CHIP 20K 1/16W (1608)
R484	1-218-855-11	s	RESISTOR,CHIP 2.2K 1/16W(1608)
R485	1-218-855-11	s	RESISTOR,CHIP 2.2K 1/16W(1608)
R486	1-218-878-11	s	RESISTOR,CHIP 20K 1/16W (1608)
R487	1-218-857-11	s	RESISTOR,CHIP 2.7K 1/16W(1608)
R488	1-216-833-11	s	RESISTOR,CHIP 10K 1/16W (1608)
R489	1-218-878-11	s	RESISTOR,CHIP 20K 1/16W (1608)
R490	1-218-857-11	s	RESISTOR,CHIP 2.7K 1/16W(1608)
R491	1-216-833-11	s	RESISTOR,CHIP 10K 1/16W (1608)
R492	1-216-864-11	s	CONDUCTOR, CHIP (1608)
R493	1-216-833-11	s	RESISTOR,CHIP 10K 1/16W (1608)
R494	1-216-833-11	s	RESISTOR,CHIP 10K 1/16W (1608)
R497	1-216-833-11	s	RESISTOR,CHIP 10K 1/16W (1608)
R498	1-216-833-11	s	RESISTOR,CHIP 10K 1/16W (1608)
R499	1-216-849-11	s	RESISTOR,CHIP 220K 1/16W 1608
R500	1-216-849-11	s	RESISTOR,CHIP 220K 1/16W 1608
R501	1-216-817-11	s	RESISTOR,CHIP 470 1/16W 1608
R502	1-216-817-11	s	RESISTOR,CHIP 470 1/16W 1608
R503	1-216-829-11	s	RESISTOR,CHIP 4.7K 1/16W(1608)
R504	1-216-829-11	s	RESISTOR,CHIP 4.7K 1/16W(1608)
R505	1-216-809-11	s	RESISTOR,CHIP 100 1/16W 1608
R506	1-216-833-11	s	RESISTOR,CHIP 10K 1/16W (1608)
R507	1-216-845-11	s	RESISTOR,CHIP 100K 1/16W(1608)
R508	1-218-879-11	s	RESISTOR,CHIP 22K 1/16W (1608)
R510	1-218-856-11	s	RESISTOR,CHIP 2.4K 1/16W(1608)
R512	1-218-856-11	s	RESISTOR,CHIP 2.4K 1/16W(1608)
R513	1-218-863-11	s	RESISTOR,CHIP 4.7K 1/16W(1608)
R514	1-218-863-11	s	RESISTOR,CHIP 4.7K 1/16W(1608)
R515	1-216-829-11	s	RESISTOR,CHIP 4.7K 1/16W(1608)
R516	1-216-864-11	s	CONDUCTOR, CHIP (1608)
R517	1-216-864-11	s	CONDUCTOR, CHIP (1608)
R518	1-216-829-11	s	RESISTOR,CHIP 4.7K 1/16W(1608)
R522	1-218-872-11	s	RESISTOR,CHIP 11K 1/16W (1608)
R523	1-218-872-11	s	RESISTOR,CHIP 11K 1/16W (1608)
R524	1-218-879-11	s	RESISTOR,CHIP 22K 1/16W (1608)
R601	1-216-845-11	s	RESISTOR,CHIP 100K 1/16W(1608)

(FP-118A BOARD)

Ref. No. or Q'ty	Part No.	SP	Description
R602	1-216-845-11	s	RESISTOR,CHIP 100K 1/16W(1608)
R603	1-216-845-11	s	RESISTOR,CHIP 100K 1/16W(1608)
R604	1-216-845-11	s	RESISTOR,CHIP 100K 1/16W(1608)
R605	1-216-845-11	s	RESISTOR,CHIP 100K 1/16W(1608)
R608	1-218-855-11	s	RESISTOR,CHIP 2.2K 1/16W(1608)
R609	1-218-855-11	s	RESISTOR,CHIP 2.2K 1/16W(1608)
R610	1-218-851-11	s	RESISTOR,CHIP 1.5K 1/16W(1608)
R611	1-218-859-11	s	RESISTOR,CHIP 3.3K 1/16W(1608)
R612	1-218-859-11	s	RESISTOR,CHIP 3.3K 1/16W(1608)
R613	1-218-857-11	s	RESISTOR,CHIP 2.7K 1/16W(1608)
R614	1-218-857-11	s	RESISTOR,CHIP 2.7K 1/16W(1608)
R615	1-218-847-11	s	RESISTOR, CHIP 1K 1/16W (1608)
R616	1-216-845-11	s	RESISTOR,CHIP 100K 1/16W(1608)
R617	1-216-845-11	s	RESISTOR,CHIP 100K 1/16W(1608)
R618	1-218-855-11	s	RESISTOR,CHIP 2.2K 1/16W(1608)
R619	1-218-871-11	s	RESISTOR,CHIP 10K 1/16W (1608)
R620	1-218-871-11	s	RESISTOR,CHIP 10K 1/16W (1608)
R621	1-218-871-11	s	RESISTOR,CHIP 10K 1/16W (1608)
R622	1-218-871-11	s	RESISTOR,CHIP 10K 1/16W (1608)
R623	1-218-855-11	s	RESISTOR,CHIP 2.2K 1/16W(1608)
R624	1-216-833-11	s	RESISTOR,CHIP 10K 1/16W (1608)
R625	1-216-817-11	s	RESISTOR,CHIP 470 1/16W 1608
R626	1-216-833-11	s	RESISTOR,CHIP 10K 1/16W (1608)
R627	1-216-817-11	s	RESISTOR,CHIP 470 1/16W 1608
R628	1-216-833-11	s	RESISTOR,CHIP 10K 1/16W (1608)
R629	1-216-833-11	s	RESISTOR,CHIP 10K 1/16W (1608)
R630	1-218-877-11	s	RESISTOR,CHIP 18K 1/16W (1608)
R631	1-218-873-11	s	RESISTOR,CHIP 12K 1/16W (1608)
R632	1-218-881-11	s	RESISTOR, CHIP 27K 1/16W(1608)
R633	1-218-903-11	s	RESISTOR,CHIP 220K 1/16W(1608)
R635	1-216-864-11	s	CONDUCTOR, CHIP (1608)
R636	1-216-833-11	s	RESISTOR,CHIP 10K 1/16W (1608)
R637	1-218-861-11	s	RESISTOR,CHIP 3.9K 1/16W(1608)
R638	1-218-827-11	s	RESISTOR,CHIP 150 1/16W (1608)
R639	1-216-825-11	s	RESISTOR,CHIP 2.2K 1/16W 1608
R640	1-216-833-11	s	RESISTOR,CHIP 10K 1/16W (1608)
R641	1-216-845-11	s	RESISTOR,CHIP 100K 1/16W(1608)
R642	1-216-833-11	s	RESISTOR,CHIP 10K 1/16W (1608)
R643	1-216-833-11	s	RESISTOR,CHIP 10K 1/16W (1608)
R644	1-216-864-11	s	CONDUCTOR, CHIP (1608)
R645	1-216-833-11	s	RESISTOR,CHIP 10K 1/16W (1608)
R646	1-216-829-11	s	RESISTOR,CHIP 4.7K 1/16W(1608)
R647	1-216-797-11	s	RESISTOR,CHIP 10 1/16W 1608
R649	1-216-864-11	s	CONDUCTOR, CHIP (1608)
R650	1-216-821-11	s	RESISTOR,CHIP 1.0K 1/16W(1608)
R651	1-216-833-11	s	RESISTOR,CHIP 10K 1/16W (1608)
R652	1-216-833-11	s	RESISTOR,CHIP 10K 1/16W (1608)
R653	1-216-821-11	s	RESISTOR,CHIP 1.0K 1/16W(1608)
R654	1-211-969-11	s	RESISTOR,CHIP 10 1/16W (1608)
R656	1-216-864-11	s	CONDUCTOR, CHIP (1608)
R657	1-216-829-11	s	RESISTOR,CHIP 4.7K 1/16W(1608)
R658	1-216-841-11	s	RESISTOR, CHIP 47K 1/16W 1608
R659	1-216-829-11	s	RESISTOR,CHIP 4.7K 1/16W(1608)
R660	1-218-476-11	s	RESISTOR, CHIP 180 1/4W (3225)
R661	1-218-866-11	s	RESISTOR,CHIP 6.2K 1/16W(1608)
R702	1-218-863-11	s	RESISTOR,CHIP 4.7K 1/16W(1608)
R703	1-218-849-11	s	RESISTOR,CHIP 1.2K 1/16W(1608)
R705	1-218-863-11	s	RESISTOR,CHIP 4.7K 1/16W(1608)
R707	1-218-861-11	s	RESISTOR,CHIP 3.9K 1/16W(1608)

(FP-118A BOARD)

Ref. No. or Q'ty	Part No.	SP	Description
R708	1-216-864-11	s	CONDUCTOR, CHIP (1608)
R715	1-216-841-11	s	RESISTOR, CHIP 47K 1/16W 1608
R717	1-216-841-11	s	RESISTOR, CHIP 47K 1/16W 1608
R718	1-218-849-11	s	RESISTOR,CHIP 1.2K 1/16W(1608)
R719	1-218-849-11	s	RESISTOR,CHIP 1.2K 1/16W(1608)
R720	1-216-821-11	s	RESISTOR,CHIP 1.0K 1/16W(1608)
R721	1-216-833-11	s	RESISTOR,CHIP 10K 1/16W (1608)
R722	1-216-841-11	s	RESISTOR, CHIP 47K 1/16W 1608
R728	1-216-841-11	s	RESISTOR, CHIP 47K 1/16W 1608
R729	1-216-829-11	s	RESISTOR,CHIP 4.7K 1/16W(1608)
R730	1-216-829-11	s	RESISTOR,CHIP 4.7K 1/16W(1608)
R731	1-216-841-11	s	RESISTOR, CHIP 47K 1/16W 1608
R733	1-211-969-11	s	RESISTOR,CHIP 10 1/16W (1608)
R736	1-211-969-11	s	RESISTOR,CHIP 10 1/16W (1608)
R738	1-211-969-11	s	RESISTOR,CHIP 10 1/16W (1608)
R801	1-216-805-11	s	RESISTOR,CHIP 47 1/16W 1608
R802	1-216-805-11	s	RESISTOR,CHIP 47 1/16W 1608
R803	1-216-849-11	s	RESISTOR,CHIP 220K 1/16W 1608
R804	1-218-740-11	s	RESISTOR,CHIP 100K 1/16W(1608)
R805	1-219-365-11	s	RESISTOR,CHIP
R806	1-218-740-11	s	RESISTOR,CHIP 100K 1/16W(1608)
R807	1-218-692-11	s	RESISTOR,CHIP 1.0K 1/16W(1608)
R808	1-218-740-11	s	RESISTOR,CHIP 100K 1/16W(1608)
R809	1-218-740-11	s	RESISTOR,CHIP 100K 1/16W(1608)
R812	1-216-864-11	s	CONDUCTOR, CHIP (1608)
RB1	1-236-907-11	s	RESISTOR BLOCK 100K (1608)
RB2	1-236-904-11	s	RESISTOR NETWORK 1K (1608)
RB3	1-239-444-11	s	NETWORK,RESISTOR 220K (1608)
RB4	1-239-444-11	s	NETWORK,RESISTOR 220K (1608)
RB5	1-236-904-11	s	RESISTOR NETWORK 1K (1608)
RB6	1-236-904-11	s	RESISTOR NETWORK 1K (1608)
RB7	1-239-444-11	s	NETWORK,RESISTOR 220K (1608)
RB8	1-239-444-11	s	NETWORK,RESISTOR 220K (1608)
RB9	1-239-444-11	s	NETWORK,RESISTOR 220K (1608)
RB10	1-239-412-11	s	NETWORK, RESISTOR 100 (1608)
RB11	1-239-412-11	s	NETWORK, RESISTOR 100 (1608)
RB12	1-236-904-11	s	RESISTOR NETWORK 1K (1608)
RB202	1-239-711-11	s	NETWORK, RESISTOR 0 (1608)
RB203	1-239-310-11	s	RESISTOR ARRAY, CHIP 220K
RB204	1-239-310-11	s	RESISTOR ARRAY, CHIP 220K
RB207	1-239-444-11	s	NETWORK,RESISTOR 220K (1608)
RB208	1-239-426-11	s	NETWORK RESISTOR 2.2K (1608)
RB209	1-239-426-11	s	NETWORK RESISTOR 2.2K (1608)
RB210	1-239-426-11	s	NETWORK RESISTOR 2.2K (1608)
RB211	1-239-426-11	s	NETWORK RESISTOR 2.2K (1608)
RB212	1-239-426-11	s	NETWORK RESISTOR 2.2K (1608)
RB801	1-239-621-11	s	NETWORK RESISTOR 22 (1608)
RB802	1-239-444-11	s	NETWORK,RESISTOR 220K (1608)
RB803	1-236-908-11	s	RESISTOR,NETWORK 10K (3216)
RB804	1-236-908-11	s	RESISTOR,NETWORK 10K (3216)
RB805	1-239-444-11	s	NETWORK,RESISTOR 220K (1608)
RB806	1-239-444-11	s	NETWORK,RESISTOR 220K (1608)
RB807	1-236-908-11	s	RESISTOR,NETWORK 10K (3216)
RB808	1-236-908-11	s	RESISTOR,NETWORK 10K (3216)
RB809	1-239-444-11	s	NETWORK,RESISTOR 220K (1608)
RV401	1-230-337-11	s	RESISTOR,VAR,CARBON 10K .
RV402	1-230-337-11	s	RESISTOR,VAR,CARBON 10K .
RV403	1-223-278-11	s	RESISTER ADJ,100K
RV601	1-223-276-11	s	RESISTOR,ADJ, 22K

(FP-118A BOARD)

Ref. No. or Q'ty	Part No.	SP	Description
RV602	1-223-276-11	s	RESISTOR,ADJ, 22K
RV603	1-230-337-11	s	RESISTOR,VAR,CARBON 10K .
RV604	1-230-337-11	s	RESISTOR,VAR,CARBON 10K .
S1	1-570-909-11	s	SWITCH, TACTIL (REFLOW TYPE)
S2	1-570-909-11	s	SWITCH, TACTIL (REFLOW TYPE)
S3	1-570-909-11	s	SWITCH, TACTIL (REFLOW TYPE)
S4	1-570-909-11	s	SWITCH, TACTIL (REFLOW TYPE)
S5	1-771-141-11	s	SWITCH, SLIDE
S6	1-771-141-11	s	SWITCH, SLIDE
S200	1-570-832-11	s	SWITCH,SLIDE (2-2-3)
S201	1-570-909-11	s	SWITCH, TACTIL (REFLOW TYPE)
S203	1-570-838-11	s	SWITCH,SLIDE (2-2-2)
S401	1-771-323-11	s	SWITCH, SLIDE
S402	1-771-323-11	s	SWITCH, SLIDE
S403	1-771-140-11	s	SWITCH, SLIDE
S404	1-771-140-11	s	SWITCH, SLIDE
S501	1-771-323-11	s	SWITCH, SLIDE
S801	1-771-141-11	s	SWITCH, SLIDE
S802	1-570-909-11	s	SWITCH, TACTIL (REFLOW TYPE)
S803	1-771-140-11	s	SWITCH, SLIDE
S804	1-771-140-11	s	SWITCH, SLIDE
S805	1-771-140-11	s	SWITCH, SLIDE
S806	1-771-140-11	s	SWITCH, SLIDE
S807	1-771-140-11	s	SWITCH, SLIDE
S808	1-771-141-11	s	SWITCH, SLIDE
S809	1-771-140-11	s	SWITCH, SLIDE
S810	1-570-909-11	s	SWITCH, TACTIL (REFLOW TYPE)
S811	1-570-711-11	s	SWITCH,SLIDE
TP1	1-535-757-11	s	CHIP, CHECKER (CONNECTOR)
TP2	1-535-757-11	s	CHIP, CHECKER (CONNECTOR)
TP200	1-535-757-11	s	CHIP, CHECKER (CONNECTOR)
TP201	1-535-757-11	s	CHIP, CHECKER (CONNECTOR)
TP401	1-535-757-11	s	CHIP, CHECKER (CONNECTOR)
TP402	1-535-757-11	s	CHIP, CHECKER (CONNECTOR)
TP601	1-535-757-11	s	CHIP, CHECKER (CONNECTOR)
TP602	1-535-757-11	s	CHIP, CHECKER (CONNECTOR)
TP603	1-535-757-11	s	CHIP, CHECKER (CONNECTOR)
X1	1-760-655-21	s	VIBRATOR, CRYSTAL
X2	1-760-655-21	s	VIBRATOR, CRYSTAL
X200	1-579-843-11	s	OSCILLATOR, CRYSTAL
X201	1-760-458-21	s	VIBRATOR, CRYSTAL
X202	1-760-272-11	s	VIBRATOR, CRYSTAL

FP-99 BOARD

Ref. No. or Q'ty	Part No.	SP	Description
1pc	A-8318-233-A	o	MOUNTED CIRCUIT BOARD, FP-99
C801	1-104-851-11	s	TANTALUM, CHIP 10uF 20% 10V
C802	1-162-970-11	s	CERAMIC, CHIP 0.01uF 10% 25V
C803	1-162-970-11	s	CERAMIC, CHIP 0.01uF 10% 25V
C805	1-162-970-11	s	CERAMIC, CHIP 0.01uF 10% 25V
C808	1-162-923-11	s	CERAMIC, CHIP 47PF 5% 50V
C809	1-162-923-11	s	CERAMIC, CHIP 47PF 5% 50V
C810	1-162-964-11	s	CERAMIC, CHIP 0.001uF 10% 50V
C811	1-162-964-11	s	CERAMIC, CHIP 0.001uF 10% 50V
C812	1-162-964-11	s	CERAMIC, CHIP 0.001uF 10% 50V
C813	1-162-964-11	s	CERAMIC, CHIP 0.001uF 10% 50V
C814	1-162-964-11	s	CERAMIC, CHIP 0.001uF 10% 50V
C815	1-162-970-11	s	CERAMIC, CHIP 0.01uF 10% 25V
C816	1-162-970-11	s	CERAMIC, CHIP 0.01uF 10% 25V
C817	1-162-970-11	s	CERAMIC, CHIP 0.01uF 10% 25V
C818	1-162-962-11	s	CERAMIC, CHIP 470PF 10% 50V
C819	1-162-962-11	s	CERAMIC, CHIP 470PF 10% 50V
C820	1-162-962-11	s	CERAMIC, CHIP 470PF 10% 50V
C821	1-162-962-11	s	CERAMIC, CHIP 470PF 10% 50V
C822	1-162-962-11	s	CERAMIC, CHIP 470PF 10% 50V
CN801	1-695-931-21	o	CONNECTOR, FPC 10P
CN802	1-573-768-21	o	PIN, CONNECTOR (1.5MM) (SMD)5P
CN803	1-573-290-21	s	PIN, CONNECTOR (1.5MM) (SMD)4P
CN804	1-573-290-21	s	PIN, CONNECTOR (1.5MM) (SMD)4P
D801	8-719-989-97	s	DIODE CL-150SD-CD
D802	8-719-989-97	s	DIODE CL-150SD-CD
D803	8-719-047-59	s	DIODE CL-150G-CD-T
D804	8-719-989-97	s	DIODE CL-150SD-CD
D805	8-719-989-97	s	DIODE CL-150SD-CD
D806	8-719-989-97	s	DIODE CL-150SD-CD
FB801	1-414-135-11	s	FERRITE 0uH
IC801	8-759-268-32	s	IC SN74HC595ADB-E05
IC802	8-759-659-71	s	IC SN74HC165APWR
IC803	8-759-659-71	s	IC SN74HC165APWR
IC804	8-759-926-37	s	IC SN74HC193ANS
IC805	8-759-082-59	s	IC TC7W32FU
IC806	8-759-523-04	s	IC TC74HC4538AFT(EL)
IC807	8-759-523-04	s	IC TC74HC4538AFT(EL)
IC808	8-759-058-64	s	IC TC7S32FU(TE85R)
IC809	8-759-277-63	s	IC TC7W14FU(TE12R)
L801	1-412-955-11	s	INDUCTOR 22uH
Q801	8-729-907-26	s	TRANSISTOR IMX1
Q802	8-729-907-26	s	TRANSISTOR IMX1
Q803	8-729-907-26	s	TRANSISTOR IMX1
R801	1-216-797-11	s	METAL, CHIP 10 5% 1/16W
R802	1-216-797-11	s	METAL, CHIP 10 5% 1/16W
R803	1-216-797-11	s	METAL, CHIP 10 5% 1/16W
R804	1-216-813-11	s	METAL, CHIP 220 5% 1/16W
R805	1-216-797-11	s	METAL, CHIP 10 5% 1/16W
R806	1-216-805-11	s	METAL, CHIP 47 5% 1/16W
R807	1-216-833-91	s	METAL, CHIP 10K 5% 1/16W
R808	1-216-821-11	s	METAL, CHIP 1K 5% 1/16W
R809	1-216-821-11	s	METAL, CHIP 1K 5% 1/16W
R810	1-216-833-91	s	METAL, CHIP 10K 5% 1/16W
R811	1-216-821-11	s	METAL, CHIP 1K 5% 1/16W

(FP-99 BOARD)

Ref. No. or Q'ty	Part No.	SP	Description
R812	1-216-821-11	s	METAL, CHIP 1K 5% 1/16W
R813	1-216-821-11	s	METAL, CHIP 1K 5% 1/16W
R814	1-216-821-11	s	METAL, CHIP 1K 5% 1/16W
R815	1-216-805-11	s	METAL, CHIP 47 5% 1/16W
R816	1-216-805-11	s	METAL, CHIP 47 5% 1/16W
R821	1-216-833-91	s	METAL, CHIP 10K 5% 1/16W
R822	1-216-849-11	s	METAL, CHIP 220K 5% 1/16W
R823	1-218-871-11	s	METAL, CHIP 10K 0.50% 1/16W
R824	1-218-871-11	s	METAL, CHIP 10K 0.50% 1/16W
R825	1-218-871-11	s	METAL, CHIP 10K 0.50% 1/16W
R826	1-218-912-11	s	METAL, CHIP 510K 0.50% 1/16W
R827	1-216-803-11	s	METAL, CHIP 33 5% 1/16W
R828	1-218-912-11	s	METAL, CHIP 510K 0.50% 1/16W
R829	1-216-803-11	s	METAL, CHIP 33 5% 1/16W
R830	1-216-864-11	s	METAL, CHIP 0 5% 1/16W
R831	1-216-864-11	s	METAL, CHIP 0 5% 1/16W
R834	1-216-849-11	s	METAL, CHIP 220K 5% 1/16W
RB801	1-236-908-11	s	RESISTOR, NETWORK, CHIP 10k
RB802	1-239-444-11	s	RESUSTIR BLOCK, CHIP 220K
RB803	1-236-908-11	s	RESISTOR, NETWORK, CHIP 10k
RB804	1-236-908-11	s	RESISTOR, NETWORK, CHIP 10k
RB805	1-239-444-11	s	RESUSTIR BLOCK, CHIP 220K
RB806	1-239-444-11	s	RESUSTIR BLOCK, CHIP 220K
RB807	1-236-908-11	s	RESISTOR, NETWORK, CHIP 10k
RB808	1-236-908-11	s	RESISTOR, NETWORK, CHIP 10k
RB809	1-239-444-11	s	RESUSTIR BLOCK, CHIP 220K
S803	1-692-111-11	s	SWITCH, KEY BOARD
S804	1-692-111-11	s	SWITCH, KEY BOARD
S805	1-692-111-11	s	SWITCH, KEY BOARD
S806	1-692-111-11	s	SWITCH, KEY BOARD
S807	1-692-111-11	s	SWITCH, KEY BOARD

GCN-16 BOARD

Ref. No. or Q'ty	Part No.	SP	Description
1pc	A-8322-170-A	o	MOUNTED CIRCUIT BOARD, GCN-16
R101	1-216-049-91	s	METAL, CHIP 1K 5% 1/10W
R102	1-216-049-91	s	METAL, CHIP 1K 5% 1/10W
R103	1-216-049-91	s	METAL, CHIP 1K 5% 1/10W
R104	1-216-049-91	s	METAL, CHIP 1K 5% 1/10W
R105	1-216-049-91	s	METAL, CHIP 1K 5% 1/10W
R106	1-216-049-91	s	METAL, CHIP 1K 5% 1/10W
R107	1-216-049-91	s	METAL, CHIP 1K 5% 1/10W
R108	1-216-049-91	s	METAL, CHIP 1K 5% 1/10W
S101	1-762-123-11	s	SWITCH, TOGGLE
S102	1-762-123-11	s	SWITCH, TOGGLE
S103	1-762-123-11	s	SWITCH, TOGGLE
S104	1-762-531-11	s	SWITCH, TOGGLE
W101	1-958-494-11	o	HARNESS, SUB (GCN15-1)
W102	1-958-495-11	o	HARNESS, SUB (GCN15-2)

HN-227 BOARD

Ref. No. or Q'ty	Part No.	SP	Description
1pc	A-8277-853-A	o	MOUNTED CIRCUIT BOARD, HN-227
C1	1-164-156-11	s	CERAMIC, CHIP 0.1uF 25V
C2	1-110-569-11	s	TANTALUM, CHIP 47uF 20% 6.3V
C3	1-164-156-11	s	CERAMIC, CHIP 0.1uF 25V
CN511	1-778-647-11	o	CONNECTOR, FFC (ZIF) 15P
CN512	1-778-647-11	o	CONNECTOR, FFC (ZIF) 15P
CN513	1-766-654-21	s	CONNECTOR, FFC/FPC 18P
CN514	1-778-646-11	o	CONNECTOR, FFC (ZIF) 10P
CN515	1-764-520-11	s	CONNECTOR, FFC/FPC (ZIF) 11P
CN516	1-695-320-21	s	PIN, CONNECTOR (1.5MM)(SMD) 2P
CN517	1-695-320-21	s	PIN, CONNECTOR (1.5MM)(SMD) 2P
IC1	8-759-469-26	s	IC AK6480AF-E2
R1	1-216-025-11	s	METAL, CHIP 100 5% 1/10W
R2	1-216-049-91	s	METAL, CHIP 1K 5% 1/10W
RB1	1-239-444-11	s	RESUSTIR BLOCK, CHIP 220K

KY-405 BOARD

Ref. No. or Q'ty	Part No.	SP	Description
1pc	A-8318-188-A	o	MOUNTED CIRCUIT BOARD, KY-405
CN1	1-695-931-21	o	CONNECTOR, FPC 10P
D1	8-719-989-97	s	DIODE CL-150SD-CD
D2	8-719-989-97	s	DIODE CL-150SD-CD
D3	8-719-989-97	s	DIODE CL-150SD-CD
R1	1-216-819-11	s	METAL, CHIP 680 5% 1/16W
R2	1-216-819-11	s	METAL, CHIP 680 5% 1/16W
R3	1-216-819-11	s	METAL, CHIP 680 5% 1/16W
S1	1-570-909-21	s	SWITCH, PUSH
S2	1-570-909-21	s	SWITCH, PUSH
S3	1-570-909-21	s	SWITCH, PUSH
S4	1-570-909-21	s	SWITCH, PUSH
S5	1-570-909-21	s	SWITCH, PUSH

LE-221 BOARD

Ref. No. or Q'ty	Part No.	SP	Description
1pc	A-8322-171-A	o	MOUNTED CIRCUIT BOARD, LE-221
C701	1-163-021-91	s	CERAMIC 0.01uF 10% 50V
C702	1-163-021-91	s	CERAMIC 0.01uF 10% 50V
CN701	1-566-761-11	o	CONNECTOR 6P, MALE
CN702	1-566-758-11	o	CONNECTOR 3P, MALE
D701	8-719-032-78	s	DIODE GL3UR8
D702	8-719-032-78	s	DIODE GL3UR8
S701	1-570-608-11	s	SWITCH, TOGGLE

MB-833 BOARD

Ref. No. or Q'ty	Part No.	SP	Description
			*1:For DSR-500WS/500WSP
			*1:Serial No. 10001-12000(UC), 30001-32000(J), 40001-42020(CE)
1pc	A-8322-150-B	o	MOUNTED CIRCUIT BOARD, MB-833
C1	*1 1-127-516-11	s	ALUMN SOLID 220uF 20% 10V
CN1	1-778-652-11	o	CONNECTOR, FFC (ZIF) 50P
CN2	1-778-652-11	o	CONNECTOR, FFC (ZIF) 50P
CN3	1-778-651-11	o	CONNECTOR, FFC (ZIF) 40P
CN5	1-778-650-11	o	CONNECTOR, FFC (ZIF) 30P
CN9	1-764-177-11	o	PIN, CONNECTOR (SMD)(1.5MM) 7P
CN10	1-778-652-11	o	CONNECTOR, FFC (ZIF) 50P
CN11	1-778-534-11	o	CONNECTOR, FFC (ZIF) 45P
CN13	1-784-629-21	o	CONNECTOR, BOARD TO BOARD 30P
CN14	1-778-652-11	o	CONNECTOR, FFC (ZIF) 50P
CN15	1-778-534-11	o	CONNECTOR, FFC (ZIF) 45P
CN16	1-778-652-11	o	CONNECTOR, FFC (ZIF) 50P
CN19	1-784-627-11	o	CONNECTOR, BOARD TO BOARD 60P
CN22	1-770-469-21	o	PIN, CONNECTOR (PC BOARD) 2P
CN23	1-695-320-21	s	PIN, CONNECTOR (1.5MM)(SMD) 2P

MT-114 BOARD

Ref. No. or Q'ty	Part No.	SP	Description
S1	1-572-288-21	s	SWITCH, PUSH

PA-219A BOARD

Ref. No. or Q'ty	Part No.	SP	Description
*1:For DSR-500WS/500WSP			
*1:Serial No. 10001-12000(UC), 30001-32000(J), 40001-42020(CE)			
46pcs	1-565-977-11	s	TERMINAL, SOLDERLESS
2pcs	1-569-520-11	o	HOUSING, CONNECTOR 10P
1pc	1-569-617-11	o	HOUSING, CONNECTOR 2P
2pcs	1-569-621-11	o	HOUSING, CONNECTOR 12P
1pc	1-569-680-11	o	HOUSING, CONNECTOR 2P
1pc	1-956-514-11	o	HARNESS, SUB (PA187-1)
1pc	1-956-515-11	o	HARNESS, SUB (PA187-2)
C1	1-135-213-21	s	CAPACITOR TANTALUM 3.3MF/25V
C2	1-107-690-11	s	CAPACITOR TANTALUM 6.8MF/35V
C3	1-135-213-21	s	CAPACITOR TANTALUM 3.3MF/25V
C4	1-162-970-11	s	CAPACITOR CERAMIC 0.01MF/25V B
C5	1-135-213-21	s	CAPACITOR TANTALUM 3.3MF/25V
C6	1-135-213-21	s	CAPACITOR TANTALUM 3.3MF/25V
C7	1-162-965-11	s	CAPACITOR,CERAMIC 1500PF/50V B
C8	1-113-981-11	s	CAPACITOR TANTALUM 22MF/20V
C10	1-162-970-11	s	CAPACITOR CERAMIC 0.01MF/25V B
C12	1-107-690-11	s	CAPACITOR TANTALUM 6.8MF/35V
C14	1-107-690-11	s	CAPACITOR TANTALUM 6.8MF/35V
C17	1-164-156-11	s	CAPACITOR,CERAMIC 0.1MF/25V F
C18	1-162-920-11	s	CAPACITOR,CERAMIC 27PF/50V CH
C19	1-164-156-11	s	CAPACITOR,CERAMIC 0.1MF/25V F
C20	1-164-156-11	s	CAPACITOR,CERAMIC 0.1MF/25V F
C21	1-162-920-11	s	CAPACITOR,CERAMIC 27PF/50V CH
C23	1-162-920-11	s	CAPACITOR,CERAMIC 27PF/50V CH
C27	1-135-259-11	s	CAPACITOR TANTALUM 10MF/6.3VF
C28	1-164-156-11	s	CAPACITOR,CERAMIC 0.1MF/25V F
C29	1-162-907-11	s	CAPACITOR,CERAMIC 2PF/50V(CK)
C30	1-113-682-11	s	CAPACITOR,TANTALUM 33MF/10V
C31	1-162-907-11	s	CAPACITOR,CERAMIC 2PF/50V(CK)
C32	1-162-910-11	s	CAPACITOR,CERAMIC 5PF/50V 1608
C33	1-164-156-11	s	CAPACITOR,CERAMIC 0.1MF/25V F
C34	1-113-991-11	s	CAPACITOR TANTALUM 33MF/16V
C35	1-164-156-11	s	CAPACITOR,CERAMIC 0.1MF/25V F
C36	1-164-156-11	s	CAPACITOR,CERAMIC 0.1MF/25V F
C37	1-113-500-11	s	CAPACITOR TANTALUM 100MF/10V
C38	1-164-156-11	s	CAPACITOR,CERAMIC 0.1MF/25V F
C39	1-164-156-11	s	CAPACITOR,CERAMIC 0.1MF/25V F
C40	1-164-156-11	s	CAPACITOR,CERAMIC 0.1MF/25V F
C41	1-162-970-11	s	CAPACITOR CERAMIC 0.01MF/25V B
C44	1-164-156-11	s	CAPACITOR,CERAMIC 0.1MF/25V F
C45	1-135-177-21	s	CAPACITOR TANTALUM 1MF/25V
C46	1-117-205-11	s	CAPACITOR TANTALUM 3.3MF/50V
C47	1-162-970-11	s	CAPACITOR CERAMIC 0.01MF/25V B
C48	1-104-851-11	s	CAPACITOR,TANTALUM 10MF/10V
C49	1-113-500-11	s	CAPACITOR TANTALUM 100MF/10V
C50	1-113-500-11	s	CAPACITOR TANTALUM 100MF/10V
C51	1-164-156-11	s	CAPACITOR,CERAMIC 0.1MF/25V F
C55	1-162-920-11	s	CAPACITOR,CERAMIC 27PF/50V CH
C56	1-164-156-11	s	CAPACITOR,CERAMIC 0.1MF/25V F
C57	1-162-920-11	s	CAPACITOR,CERAMIC 27PF/50V CH
C58	1-164-156-11	s	CAPACITOR,CERAMIC 0.1MF/25V F
C59	1-164-156-11	s	CAPACITOR,CERAMIC 0.1MF/25V F
CN1	1-766-383-11	o	PIN, CONNECTOR (1.5MM)(SMD)12P
CN2	1-766-382-11	o	PIN, CONNECTOR (1.5MM)(SMD)10P
CN3	1-695-320-21	s	PIN, CONNECTOR(1.5MM)SMD 2P
D1	8-719-059-50	s	DIODE MA3J142D0LS0

(PA-219A BOARD)

Ref. No. or Q'ty	Part No.	SP	Description
D2	8-719-059-50	s	DIODE MA3J142D0LS0
D4	8-719-017-42	s	DIODE HSM88WA
D5	8-719-986-76	s	DIODE SB007W03C
FB1	1-543-775-11	s	BEAD, FERRITE
IC2	8-759-196-96	s	IC TC7SH08FU (TE85R)
IC4	8-759-985-17	s	IC 74AC04SJ
IC6	8-759-196-96	s	IC TC7SH08FU (TE85R)
Q1	8-729-402-19	s	TRANSISTOR XN6501
Q2	8-729-117-32	s	TRANSISTOR 2SC4177
Q3	8-729-101-25	s	TRANSISTOR 2SC1009A
Q5	8-729-143-07	s	TRANSISTOR 2SA1610-Y33
Q7	8-729-143-07	s	TRANSISTOR 2SA1610-Y33
Q8	8-729-143-07	s	TRANSISTOR 2SA1610-Y33
Q9	8-729-043-02	s	TRANSISTOR SST211-T1
Q10	8-729-117-32	s	TRANSISTOR 2SC4177
Q11	8-729-143-07	s	TRANSISTOR 2SA1610-Y33
Q12	8-729-117-32	s	TRANSISTOR 2SC4177
Q13	8-729-043-02	s	TRANSISTOR SST211-T1
Q14	8-729-143-07	s	TRANSISTOR 2SA1610-Y33
Q15	8-729-117-32	s	TRANSISTOR 2SC4177
Q16	8-729-043-02	s	TRANSISTOR SST211-T1
Q18	8-729-117-32	s	TRANSISTOR 2SC4177
Q24	8-729-143-07	s	TRANSISTOR 2SA1610-Y33
Q25	8-729-143-07	s	TRANSISTOR 2SA1610-Y33
Q26	8-729-143-07	s	TRANSISTOR 2SA1610-Y33
Q27	8-729-143-13	s	TRANSISTOR 2SC4176-B34
Q28	8-729-117-32	s	TRANSISTOR 2SC4177
Q29	8-729-117-32	s	TRANSISTOR 2SC4177
Q32	8-729-143-07	s	TRANSISTOR 2SA1610-Y33
Q33	8-729-143-07	s	TRANSISTOR 2SA1610-Y33
Q35	8-729-117-32	s	TRANSISTOR 2SC4177
Q36	8-729-117-16	s	TRANSISTOR 2SA1611M6
Q37	8-729-043-02	s	TRANSISTOR SST211-T1
Q38	8-729-117-32	s	TRANSISTOR 2SC4177
Q39	8-729-117-16	s	TRANSISTOR 2SA1611M6
Q40	8-729-043-02	s	TRANSISTOR SST211-T1
R1	1-218-871-11	s	RESISTOR,CHIP 10K 1/16W (1608)
R3	1-218-887-11	s	RESISTOR,CHIP 47K 1/16W (1608)
R4	1-218-885-11	s	RESISTOR,CHIP 39K 1/16W (1608)
R5	1-216-857-11	s	RESISTOR, CHIP 1.0M 1/16W 1608
R6	1-218-883-11	s	RESISTOR,CHIP 33K 1/16W (1608)
R7	1-218-871-11	s	RESISTOR,CHIP 10K 1/16W (1608)
R8	1-216-857-11	s	RESISTOR, CHIP 1.0M 1/16W 1608
R9	1-218-871-11	s	RESISTOR,CHIP 10K 1/16W (1608)
R10	1-218-885-11	s	RESISTOR,CHIP 39K 1/16W (1608)
R11	1-218-875-11	s	RESISTOR,CHIP 15K 1/16W (1608)
R12	1-218-844-11	s	RESISTOR,CHIP 750 1/16W (1608)
R13	1-218-823-11	s	RESISTOR,CHIP 100 1/16W (1608)
R14	1-218-859-11	s	RESISTOR,CHIP 3.3K 1/16W(1608)
R20	1-218-847-11	s	RESISTOR, CHIP 1K 1/16W (1608)
R28	1-218-853-11	s	RESISTOR,CHIP 1.8K 1/16W(1608)
R29	1-218-849-11	s	RESISTOR,CHIP 1.2K 1/16W(1608)
R30	1-216-864-11	s	RESISTOR,CHIP 0 1/16W (1608)
R31	1-218-863-11	s	RESIATOR,CHIP 4.7K 1/16W(1608)
R32	1-218-864-11	s	RESISTOR,CHIP 5.1K 1/16W(1608)
R33	1-218-823-11	s	RESISTOR,CHIP 100 1/16W (1608)
R34	1-218-853-11	s	RESISTOR,CHIP 1.8K 1/16W(1608)

(PA-219A BOARD)

Ref. No. or Q'ty	Part No.	SP	Description
R35	1-218-895-11	s	RESISTOR,CHIP 100K 1/16W(1608)
R36	1-216-864-11	s	RESISTOR,CHIP 0 1/16W (1608)
R37 *1	1-218-858-11	s	RESISTOR, CHIP 3K 1/16W (1608)
R38	1-218-849-11	s	RESISTOR,CHIP 1.2K 1/16W(1608)
R39	1-211-969-11	s	RESISTOR,CHIP 10 1/16W (1608)
R40	1-218-853-11	s	RESISTOR,CHIP 1.8K 1/16W(1608)
R41	1-218-823-11	s	RESISTOR,CHIP 100 1/16W (1608)
R42 *1	1-218-858-11	s	RESISTOR, CHIP 3K 1/16W (1608)
R43	1-216-864-11	s	RESISTOR,CHIP 0 1/16W (1608)
R44	1-218-853-11	s	RESISTOR,CHIP 1.8K 1/16W(1608)
R47	1-218-875-11	s	RESISTOR,CHIP 15K 1/16W (1608)
R49	1-216-864-11	s	RESISTOR,CHIP 0 1/16W (1608)
R50	1-218-875-11	s	RESISTOR,CHIP 15K 1/16W (1608)
R59	1-218-871-11	s	RESISTOR,CHIP 10K 1/16W (1608)
R60	1-218-887-11	s	RESISTOR,CHIP 47K 1/16W (1608)
R62	1-218-845-11	s	RESISTOR,CHIP 820 1/16W (1608)
R64	1-218-860-11	s	RESISTOR,CHIP 3.6K 1/16W(1608)
R65	1-218-695-11	s	RESISTOR,CHIP 1.3K 1/16W(1608)
R66	1-218-843-11	s	RESISTOR,CHIP 680 1/16W (1608)
R67	1-218-845-11	s	RESISTOR,CHIP 820 1/16W (1608)
R69	1-218-860-11	s	RESISTOR,CHIP 3.6K 1/16W(1608)
R70	1-218-704-11	s	RESISTOR,CHIP 3.3K 1/16W(1608)
R71	1-218-853-11	s	RESISTOR,CHIP 1.8K 1/16W(1608)
R72	1-218-855-11	s	RESISTOR,CHIP 2.2K 1/16W(1608)
R73	1-218-823-11	s	RESISTOR,CHIP 100 1/16W (1608)
R74	1-218-823-11	s	RESISTOR,CHIP 100 1/16W (1608)
R75	1-218-855-11	s	RESISTOR,CHIP 2.2K 1/16W(1608)
R76	1-216-853-11	s	RESISTOR,CHIP 470K 1/16W 1608
R77	1-216-853-11	s	RESISTOR,CHIP 470K 1/16W 1608
R78	1-218-895-11	s	RESISTOR,CHIP 100K 1/16W(1608)
R79	1-218-895-11	s	RESISTOR,CHIP 100K 1/16W(1608)
R80	1-211-969-11	s	RESISTOR,CHIP 10 1/16W (1608)
R81	1-211-969-11	s	RESISTOR,CHIP 10 1/16W (1608)
R82	1-218-881-11	s	RESISTOR, CHIP 27K 1/16W(1608)
R83	1-218-891-11	s	RESISTOR,CHIP 68K 1/16W (1608)
R84	1-218-839-11	s	RESISTOR,CHIP 470 1/16W (1608)
R85	1-218-851-11	s	RESISTOR,CHIP 1.5K 1/16W(1608)
R86	1-218-863-11	s	RESIATOR,CHIP 4.7K 1/16W(1608)
R87	1-216-864-11	s	RESISTOR,CHIP 0 1/16W (1608)
R92	1-218-891-11	s	RESISTOR,CHIP 68K 1/16W (1608)
R93	1-218-880-11	s	RESISTOR,CHIP 24K 1/16W (1608)
R94	1-218-847-11	s	RESISTOR, CHIP 1K 1/16W (1608)
R97	1-216-864-11	s	RESISTOR,CHIP 0 1/16W (1608)
R99	1-218-879-11	s	RESISTOR,CHIP 22K 1/16W (1608)
R103	1-216-864-11	s	RESISTOR,CHIP 0 1/16W (1608)
R104	1-218-875-11	s	RESISTOR,CHIP 15K 1/16W (1608)
R105	1-218-853-11	s	RESISTOR,CHIP 1.8K 1/16W(1608)
R106	1-216-864-11	s	RESISTOR,CHIP 0 1/16W (1608)
R107	1-218-875-11	s	RESISTOR,CHIP 15K 1/16W (1608)
R108	1-218-853-11	s	RESISTOR,CHIP 1.8K 1/16W(1608)
R109	1-211-969-11	s	RESISTOR,CHIP 10 1/16W (1608)
R110	1-218-879-11	s	RESISTOR,CHIP 22K 1/16W (1608)
R112	1-216-864-11	s	RESISTOR,CHIP 0 1/16W (1608)
R113	1-216-864-11	s	RESISTOR,CHIP 0 1/16W (1608)
RV1	1-241-263-11	s	RESISTOR ADJ 5K (CERMET)

PA-220A BOARD

Ref. No. or Q'ty	Part No.	SP	Description
*1:For DSR-500WS/500WSP			
*1:Serial No. 10001-12000(UC), 30001-32000(J), 40001-42020(CE)			
26pcs	1-565-977-11	s	TERMINAL, SOLDERLESS
1pc	1-569-617-11	o	HOUSING, CONNECTOR 2P
2pcs	1-569-621-11	o	HOUSING, CONNECTOR 12P
1pc	1-569-680-11	o	HOUSING, CONNECTOR 2P
2pcs	1-956-515-11	o	HARNESS, SUB (PA187-2)
C1	1-135-213-21	s	CAPACITOR TANTALUM 3.3MF/25V
C2	1-107-690-11	s	CAPACITOR TANTALUM 6.8MF/35V
C3	1-135-213-21	s	CAPACITOR TANTALUM 3.3MF/25V
C4	1-162-970-11	s	CAPACITOR CERAMIC 0.01MF/25V B
C5	1-135-213-21	s	CAPACITOR TANTALUM 3.3MF/25V
C6	1-135-213-21	s	CAPACITOR TANTALUM 3.3MF/25V
C7	1-162-965-11	s	CAPACITOR,CERAMIC 1500PF/50V B
C8	1-113-981-11	s	CAPACITOR TANTALUM 22MF/20V
C10	1-162-970-11	s	CAPACITOR CERAMIC 0.01MF/25V B
C12	1-107-690-11	s	CAPACITOR TANTALUM 6.8MF/35V
C14	1-107-690-11	s	CAPACITOR TANTALUM 6.8MF/35V
C17	1-164-156-11	s	CAPACITOR,CERAMIC 0.1MF/25V F
C18	1-162-920-11	s	CAPACITOR,CERAMIC 27PF/50V CH
C19	1-164-156-11	s	CAPACITOR,CERAMIC 0.1MF/25V F
C20	1-164-156-11	s	CAPACITOR,CERAMIC 0.1MF/25V F
C21	1-162-920-11	s	CAPACITOR,CERAMIC 27PF/50V CH
C23	1-162-920-11	s	CAPACITOR,CERAMIC 27PF/50V CH
C27	1-135-259-11	s	CAPACITOR TANTALUM 10MF/6.3VF
C28	1-164-156-11	s	CAPACITOR,CERAMIC 0.1MF/25V F
C29	1-162-916-11	s	CAPACITOR,CERAMIC 12PF/50V CH
C30	1-113-682-11	s	CAPACITOR,TANTALUM 33MF/10V
C31	1-162-916-11	s	CAPACITOR,CERAMIC 12PF/50V CH
C32	1-162-915-11	s	CAPACITOR,CERAMIC 10PF/50V CH
C33	1-164-156-11	s	CAPACITOR,CERAMIC 0.1MF/25V F
C34	1-113-991-11	s	CAPACITOR TANTALUM 33MF/16V
C35	1-164-156-11	s	CAPACITOR,CERAMIC 0.1MF/25V F
C36	1-164-156-11	s	CAPACITOR,CERAMIC 0.1MF/25V F
C37	1-113-500-11	s	CAPACITOR TANTALUM 100MF/10V
C38	1-164-156-11	s	CAPACITOR,CERAMIC 0.1MF/25V F
C39	1-164-156-11	s	CAPACITOR,CERAMIC 0.1MF/25V F
C40	1-164-156-11	s	CAPACITOR,CERAMIC 0.1MF/25V F
C41	1-162-970-11	s	CAPACITOR CERAMIC 0.01MF/25V B
C44	1-164-156-11	s	CAPACITOR,CERAMIC 0.1MF/25V F
C45	1-135-177-21	s	CAPACITOR TANTALUM 1MF/25V
C46	1-117-205-11	s	CAPACITOR TANTALUM 3.3MF/50V
C47	1-162-970-11	s	CAPACITOR CERAMIC 0.01MF/25V B
C48	1-104-851-11	s	CAPACITOR,TANTALUM 10MF/10V
C49	1-164-156-11	s	CAPACITOR,CERAMIC 0.1MF/25V F
C50	1-113-500-11	s	CAPACITOR TANTALUM 100MF/10V
C51	1-113-500-11	s	CAPACITOR TANTALUM 100MF/10V
C52	1-164-156-11	s	CAPACITOR,CERAMIC 0.1MF/25V F
C55	1-162-920-11	s	CAPACITOR,CERAMIC 27PF/50V CH
C56	1-164-156-11	s	CAPACITOR,CERAMIC 0.1MF/25V F
C57	1-162-920-11	s	CAPACITOR,CERAMIC 27PF/50V CH
C58	1-164-156-11	s	CAPACITOR,CERAMIC 0.1MF/25V F
C59	1-164-156-11	s	CAPACITOR,CERAMIC 0.1MF/25V F
CN1	1-766-383-11	o	PIN, CONNECTOR (1.5MM)(SMD)12P
CN2	1-766-383-11	o	PIN, CONNECTOR (1.5MM)(SMD)12P
CN3	1-695-320-21	s	PIN, CONNECTOR(1.5MM)SMD 2P
D1	8-719-059-50	s	DIODE MA3J142D0LS0
D2	8-719-059-50	s	DIODE MA3J142D0LS0

(PA-220A BOARD)

Ref. No. or Q'ty	Part No.	SP	Description
D4	8-719-017-42	s	DIODE HSM88WA
D5	8-719-986-76	s	DIODE SB007W03C
FB1	1-543-775-11	s	BEAD, FERRITE
IC2	8-759-196-96	s	IC TC7SH08FU (TE85R)
IC3	8-759-075-53	s	IC LM35DM
IC4	8-759-985-17	s	IC 74AC04SJ
IC6	8-759-196-96	s	IC TC7SH08FU (TE85R)
Q1	8-729-402-19	s	TRANSISTOR XN6501
Q2	8-729-117-32	s	TRANSISTOR 2SC4177
Q3	8-729-101-25	s	TRANSISTOR 2SC1009A
Q5	8-729-143-07	s	TRANSISTOR 2SA1610-Y33
Q7	8-729-143-07	s	TRANSISTOR 2SA1610-Y33
Q8	8-729-143-07	s	TRANSISTOR 2SA1610-Y33
Q9	8-729-043-02	s	TRANSISTOR SST211-T1
Q10	8-729-117-32	s	TRANSISTOR 2SC4177
Q11	8-729-143-07	s	TRANSISTOR 2SA1610-Y33
Q12	8-729-117-32	s	TRANSISTOR 2SC4177
Q13	8-729-043-02	s	TRANSISTOR SST211-T1
Q14	8-729-143-07	s	TRANSISTOR 2SA1610-Y33
Q15	8-729-117-32	s	TRANSISTOR 2SC4177
Q16	8-729-043-02	s	TRANSISTOR SST211-T1
Q18	8-729-117-32	s	TRANSISTOR 2SC4177
Q24	8-729-143-07	s	TRANSISTOR 2SA1610-Y33
Q25	8-729-143-07	s	TRANSISTOR 2SA1610-Y33
Q26	8-729-143-07	s	TRANSISTOR 2SA1610-Y33
Q27	8-729-143-13	s	TRANSISTOR 2SC4176-B34
Q28	8-729-117-32	s	TRANSISTOR 2SC4177
Q29	8-729-117-32	s	TRANSISTOR 2SC4177
Q32	8-729-143-07	s	TRANSISTOR 2SA1610-Y33
Q33	8-729-143-07	s	TRANSISTOR 2SA1610-Y33
Q35	8-729-117-32	s	TRANSISTOR 2SC4177
Q36	8-729-117-16	s	TRANSISTOR 2SA1611M6
Q37	8-729-043-02	s	TRANSISTOR SST211-T1
Q38	8-729-117-32	s	TRANSISTOR 2SC4177
Q39	8-729-117-16	s	TRANSISTOR 2SA1611M6
Q40	8-729-043-02	s	TRANSISTOR SST211-T1
R1	1-218-871-11	s	RESISTOR,CHIP 10K 1/16W (1608)
R3	1-218-887-11	s	RESISTOR,CHIP 47K 1/16W (1608)
R4	1-218-885-11	s	RESISTOR,CHIP 39K 1/16W (1608)
R5	1-216-857-11	s	RESISTOR, CHIP 1.0M 1/16W 1608
R6	1-218-883-11	s	RESISTOR,CHIP 33K 1/16W (1608)
R7	1-218-871-11	s	RESISTOR,CHIP 10K 1/16W (1608)
R8	1-216-857-11	s	RESISTOR, CHIP 1.0M 1/16W 1608
R9	1-218-871-11	s	RESISTOR,CHIP 10K 1/16W (1608)
R10	1-218-885-11	s	RESISTOR,CHIP 39K 1/16W (1608)
R11	1-218-875-11	s	RESISTOR,CHIP 15K 1/16W (1608)
R12	1-218-844-11	s	RESISTOR,CHIP 750 1/16W (1608)
R13	1-218-823-11	s	RESISTOR,CHIP 100 1/16W (1608)
R14	1-218-859-11	s	RESISTOR,CHIP 3.3K 1/16W(1608)
R20	1-218-847-11	s	RESISTOR, CHIP 1K 1/16W (1608)
R28	1-218-853-11	s	RESISTOR,CHIP 1.8K 1/16W(1608)
R29	1-218-849-11	s	RESISTOR,CHIP 1.2K 1/16W(1608)
R30	1-216-864-11	s	RESISTOR,CHIP 0 1/16W (1608)
R31	1-218-863-11	s	RESIATOR,CHIP 4.7K 1/16W(1608)
R32	1-218-864-11	s	RESISTOR,CHIP 5.1K 1/16W(1608)
R33	1-218-823-11	s	RESISTOR,CHIP 100 1/16W (1608)
R34	1-218-853-11	s	RESISTOR,CHIP 1.8K 1/16W(1608)

(PA-220A BOARD)

Ref. No. or Q'ty	Part No.	SP	Description
R35	1-218-895-11	s	RESISTOR,CHIP 100K 1/16W(1608)
R36	1-216-864-11	s	RESISTOR,CHIP 0 1/16W (1608)
*1 R37	1-218-858-11	s	RESISTOR, CHIP 3K 1/16W (1608)
R38	1-218-849-11	s	RESISTOR,CHIP 1.2K 1/16W(1608)
R39	1-211-969-11	s	RESISTOR,CHIP 10 1/16W (1608)
R40	1-218-853-11	s	RESISTOR,CHIP 1.8K 1/16W(1608)
R41	1-218-823-11	s	RESISTOR,CHIP 100 1/16W (1608)
*1 R42	1-218-858-11	s	RESISTOR, CHIP 3K 1/16W (1608)
R43	1-216-864-11	s	RESISTOR,CHIP 0 1/16W (1608)
R44	1-218-853-11	s	RESISTOR,CHIP 1.8K 1/16W(1608)
R47	1-218-875-11	s	RESISTOR,CHIP 15K 1/16W (1608)
R49	1-216-864-11	s	RESISTOR,CHIP 0 1/16W (1608)
R50	1-218-875-11	s	RESISTOR,CHIP 15K 1/16W (1608)
R59	1-218-871-11	s	RESISTOR,CHIP 10K 1/16W (1608)
R60	1-218-887-11	s	RESISTOR,CHIP 47K 1/16W (1608)
R62	1-218-850-11	s	RESISTOR,CHIP 1.3K 1/16W(1608)
R64	1-218-845-11	s	RESISTOR,CHIP 820 1/16W (1608)
R65	1-218-695-11	s	RESISTOR,CHIP 1.3K 1/16W(1608)
R66	1-218-843-11	s	RESISTOR,CHIP 680 1/16W (1608)
R67	1-218-850-11	s	RESISTOR,CHIP 1.3K 1/16W(1608)
R69	1-218-845-11	s	RESISTOR,CHIP 820 1/16W (1608)
R70	1-218-704-11	s	RESISTOR,CHIP 3.3K 1/16W(1608)
R71	1-218-853-11	s	RESISTOR,CHIP 1.8K 1/16W(1608)
R74	1-218-823-11	s	RESISTOR,CHIP 100 1/16W (1608)
R75	1-218-855-11	s	RESISTOR,CHIP 2.2K 1/16W(1608)
R76	1-216-853-11	s	RESISTOR,CHIP 470K 1/16W 1608
R77	1-216-853-11	s	RESISTOR,CHIP 470K 1/16W 1608
R78	1-218-895-11	s	RESISTOR,CHIP 100K 1/16W(1608)
R79	1-218-895-11	s	RESISTOR,CHIP 100K 1/16W(1608)
R80	1-211-969-11	s	RESISTOR,CHIP 10 1/16W (1608)
R81	1-211-969-11	s	RESISTOR,CHIP 10 1/16W (1608)
R82	1-218-881-11	s	RESISTOR, CHIP 27K 1/16W(1608)
R83	1-218-891-11	s	RESISTOR,CHIP 68K 1/16W (1608)
R84	1-218-839-11	s	RESISTOR,CHIP 470 1/16W (1608)
R85	1-218-851-11	s	RESISTOR,CHIP 1.5K 1/16W(1608)
R86	1-218-863-11	s	RESIATOR,CHIP 4.7K 1/16W(1608)
R87	1-216-864-11	s	RESISTOR,CHIP 0 1/16W (1608)
R92	1-218-891-11	s	RESISTOR,CHIP 68K 1/16W (1608)
R93	1-218-880-11	s	RESISTOR,CHIP 24K 1/16W (1608)
R94	1-218-847-11	s	RESISTOR, CHIP 1K 1/16W (1608)
R96	1-218-835-11	s	RESISTOR,CHIP 330 1/16W (1608)
R97	1-216-864-11	s	RESISTOR,CHIP 0 1/16W (1608)
R99	1-218-881-11	s	RESISTOR, CHIP 27K 1/16W(1608)
R103	1-216-864-11	s	RESISTOR,CHIP 0 1/16W (1608)
R104	1-218-875-11	s	RESISTOR,CHIP 15K 1/16W (1608)
R105	1-218-853-11	s	RESISTOR,CHIP 1.8K 1/16W(1608)
R106	1-216-864-11	s	RESISTOR,CHIP 0 1/16W (1608)
R107	1-218-875-11	s	RESISTOR,CHIP 15K 1/16W (1608)
R108	1-218-853-11	s	RESISTOR,CHIP 1.8K 1/16W(1608)
R109	1-211-969-11	s	RESISTOR,CHIP 10 1/16W (1608)
R110	1-218-881-11	s	RESISTOR, CHIP 27K 1/16W(1608)
R112	1-216-864-11	s	RESISTOR,CHIP 0 1/16W (1608)
R113	1-216-864-11	s	RESISTOR,CHIP 0 1/16W (1608)

PA-221A BOARD

Ref. No. or Q'ty	Part No.	SP	Description
*1:For DSR-500WS/500WSP			
*1:Serial No. 10001-12000(UC), 30001-32000(J), 40001-42020(CE)			
26pcs	1-565-977-11	s	TERMINAL, SOLDERLESS
1pc	1-569-617-11	o	HOUSING, CONNECTOR 2P
2pcs	1-569-621-11	o	HOUSING, CONNECTOR 12P
1pc	1-569-680-11	o	HOUSING, CONNECTOR 2P
2pcs	1-956-515-11	o	HARNESS, SUB (PA187-2)
C1	1-135-213-21	s	CAPACITOR TANTALUM 3.3MF/25V
C2	1-107-690-11	s	CAPACITOR TANTALUM 6.8MF/35V
C3	1-135-213-21	s	CAPACITOR TANTALUM 3.3MF/25V
C4	1-162-970-11	s	CAPACITOR CERAMIC 0.01MF/25V B
C5	1-135-213-21	s	CAPACITOR TANTALUM 3.3MF/25V
C6	1-135-213-21	s	CAPACITOR TANTALUM 3.3MF/25V
C7	1-162-965-11	s	CAPACITOR,CERAMIC 1500PF/50V B
C8	1-113-981-11	s	CAPACITOR TANTALUM 22MF/20V
C10	1-162-970-11	s	CAPACITOR CERAMIC 0.01MF/25V B
C12	1-107-690-11	s	CAPACITOR TANTALUM 6.8MF/35V
C14	1-107-690-11	s	CAPACITOR TANTALUM 6.8MF/35V
C17	1-164-156-11	s	CAPACITOR,CERAMIC 0.1MF/25V F
C18	1-162-920-11	s	CAPACITOR,CERAMIC 27PF/50V CH
C19	1-164-156-11	s	CAPACITOR,CERAMIC 0.1MF/25V F
C20	1-164-156-11	s	CAPACITOR,CERAMIC 0.1MF/25V F
C21	1-162-920-11	s	CAPACITOR,CERAMIC 27PF/50V CH
C23	1-162-920-11	s	CAPACITOR,CERAMIC 27PF/50V CH
C27	1-135-259-11	s	CAPACITOR TANTALUM 10MF/6.3VF
C28	1-164-156-11	s	CAPACITOR,CERAMIC 0.1MF/25V F
C29	1-162-908-11	s	CAPACITOR,CERAMIC 3PF/50V 1608
C30	1-113-682-11	s	CAPACITOR,TANTALUM 33MF/10V
C31	1-162-908-11	s	CAPACITOR,CERAMIC 3PF/50V 1608
C32	1-162-915-11	s	CAPACITOR,CERAMIC 10PF/50V CH
C33	1-164-156-11	s	CAPACITOR,CERAMIC 0.1MF/25V F
C34	1-113-991-11	s	CAPACITOR TANTALUM 33MF/16V
C35	1-164-156-11	s	CAPACITOR,CERAMIC 0.1MF/25V F
C36	1-164-156-11	s	CAPACITOR,CERAMIC 0.1MF/25V F
C37	1-113-500-11	s	CAPACITOR TANTALUM 100MF/10V
C38	1-164-156-11	s	CAPACITOR,CERAMIC 0.1MF/25V F
C39	1-164-156-11	s	CAPACITOR,CERAMIC 0.1MF/25V F
C40	1-164-156-11	s	CAPACITOR,CERAMIC 0.1MF/25V F
C41	1-162-970-11	s	CAPACITOR CERAMIC 0.01MF/25V B
C44	1-164-156-11	s	CAPACITOR,CERAMIC 0.1MF/25V F
C45	1-135-177-21	s	CAPACITOR TANTALUM 1MF/25V
C46	1-117-205-11	s	CAPACITOR TANTALUM 3.3MF/50V
C47	1-162-970-11	s	CAPACITOR CERAMIC 0.01MF/25V B
C48	1-104-851-11	s	CAPACITOR,TANTALUM 10MF/10V
C50	1-113-500-11	s	CAPACITOR TANTALUM 100MF/10V
C51	1-113-500-11	s	CAPACITOR TANTALUM 100MF/10V
C52	1-164-156-11	s	CAPACITOR,CERAMIC 0.1MF/25V F
C55	1-162-920-11	s	CAPACITOR,CERAMIC 27PF/50V CH
C56	1-164-156-11	s	CAPACITOR,CERAMIC 0.1MF/25V F
C57	1-162-920-11	s	CAPACITOR,CERAMIC 27PF/50V CH
C58	1-164-156-11	s	CAPACITOR,CERAMIC 0.1MF/25V F
C59	1-164-156-11	s	CAPACITOR,CERAMIC 0.1MF/25V F
CN1	1-766-383-11	o	PIN, CONNECTOR (1.5MM)(SMD)12P
CN2	1-766-383-11	o	PIN, CONNECTOR (1.5MM)(SMD)12P
CN3	1-695-320-21	s	PIN, CONNECTOR(1.5MM)SMD 2P
D1	8-719-059-50	s	DIODE MA3J142D0LSO
D2	8-719-059-50	s	DIODE MA3J142D0LSO
D4	8-719-017-42	s	DIODE HSM88WA
D5	8-719-986-76	s	DIODE SB007W03C

(PA-221A BOARD)

Ref. No. or Q'ty	Part No.	SP	Description
FB1	1-543-775-11	s	BEAD, FERRITE
IC2	8-759-196-96	s	IC TC7SH08FU (TE85R)
IC4	8-759-985-17	s	IC 74AC04SJ
IC6	8-759-196-96	s	IC TC7SH08FU (TE85R)
Q1	8-729-402-19	s	TRANSISTOR XN6501
Q2	8-729-117-32	s	TRANSISTOR 2SC4177
Q3	8-729-101-25	s	TRANSISTOR 2SC1009A
Q5	8-729-143-07	s	TRANSISTOR 2SA1610-Y33
Q7	8-729-143-07	s	TRANSISTOR 2SA1610-Y33
Q8	8-729-143-07	s	TRANSISTOR 2SA1610-Y33
Q9	8-729-043-02	s	TRANSISTOR SST211-T1
Q10	8-729-117-32	s	TRANSISTOR 2SC4177
Q11	8-729-143-07	s	TRANSISTOR 2SA1610-Y33
Q12	8-729-117-32	s	TRANSISTOR 2SC4177
Q13	8-729-043-02	s	TRANSISTOR SST211-T1
Q14	8-729-143-07	s	TRANSISTOR 2SA1610-Y33
Q15	8-729-117-32	s	TRANSISTOR 2SC4177
Q16	8-729-043-02	s	TRANSISTOR SST211-T1
Q18	8-729-117-32	s	TRANSISTOR 2SC4177
Q24	8-729-143-07	s	TRANSISTOR 2SA1610-Y33
Q25	8-729-143-07	s	TRANSISTOR 2SA1610-Y33
Q26	8-729-143-07	s	TRANSISTOR 2SA1610-Y33
Q27	8-729-143-13	s	TRANSISTOR 2SC4176-B34
Q28	8-729-117-32	s	TRANSISTOR 2SC4177
Q29	8-729-117-32	s	TRANSISTOR 2SC4177
Q32	8-729-143-07	s	TRANSISTOR 2SA1610-Y33
Q33	8-729-143-07	s	TRANSISTOR 2SA1610-Y33
Q35	8-729-117-32	s	TRANSISTOR 2SC4177
Q36	8-729-117-16	s	TRANSISTOR 2SA1611M6
Q37	8-729-043-02	s	TRANSISTOR SST211-T1
Q38	8-729-117-32	s	TRANSISTOR 2SC4177
Q39	8-729-117-16	s	TRANSISTOR 2SA1611M6
Q40	8-729-043-02	s	TRANSISTOR SST211-T1
R1	1-218-871-11	s	RESISTOR,CHIP 10K 1/16W (1608)
R3	1-218-887-11	s	RESISTOR,CHIP 47K 1/16W (1608)
R4	1-218-885-11	s	RESISTOR,CHIP 39K 1/16W (1608)
R5	1-216-857-11	s	RESISTOR, CHIP 1.0M 1/16W 1608
R6	1-218-883-11	s	RESISTOR,CHIP 33K 1/16W (1608)
R7	1-218-871-11	s	RESISTOR,CHIP 10K 1/16W (1608)
R8	1-216-857-11	s	RESISTOR, CHIP 1.0M 1/16W 1608
R9	1-218-871-11	s	RESISTOR,CHIP 10K 1/16W (1608)
R10	1-218-885-11	s	RESISTOR,CHIP 39K 1/16W (1608)
R11	1-218-875-11	s	RESISTOR,CHIP 15K 1/16W (1608)
R12	1-218-844-11	s	RESISTOR,CHIP 750 1/16W (1608)
R13	1-218-823-11	s	RESISTOR,CHIP 100 1/16W (1608)
R14	1-218-859-11	s	RESISTOR,CHIP 3.3K 1/16W(1608)
R20	1-218-847-11	s	RESISTOR, CHIP 1K 1/16W (1608)
R28	1-218-853-11	s	RESISTOR,CHIP 1.8K 1/16W(1608)
R29	1-218-849-11	s	RESISTOR,CHIP 1.2K 1/16W(1608)
R30	1-216-864-11	s	RESISTOR,CHIP 0 1/16W (1608)
R31	1-218-863-11	s	RESIATOR,CHIP 4.7K 1/16W(1608)
R32	1-218-864-11	s	RESISTOR,CHIP 5.1K 1/16W(1608)
R33	1-218-823-11	s	RESISTOR,CHIP 100 1/16W (1608)
R34	1-218-853-11	s	RESISTOR,CHIP 1.8K 1/16W(1608)
R35	1-218-895-11	s	RESISTOR,CHIP 100K 1/16W(1608)
R36	1-216-864-11	s	RESISTOR,CHIP 0 1/16W (1608)
R37 *1	1-218-858-11	s	RESISTOR, CHIP 3K 1/16W (1608)
R38	1-218-849-11	s	RESISTOR,CHIP 1.2K 1/16W(1608)

(PA-221A BOARD)

Ref. No. or Q'ty	Part No.	SP	Description
R39	1-211-969-11	s	RESISTOR,CHIP 10 1/16W (1608)
R40	1-218-853-11	s	RESISTOR,CHIP 1.8K 1/16W(1608)
R41	1-218-823-11	s	RESISTOR,CHIP 100 1/16W (1608)
*1 R42	1-218-858-11	s	RESISTOR, CHIP 3K 1/16W (1608)
R43	1-216-864-11	s	RESISTOR,CHIP 0 1/16W (1608)
R44	1-218-853-11	s	RESISTOR,CHIP 1.8K 1/16W(1608)
R47	1-218-875-11	s	RESISTOR,CHIP 15K 1/16W (1608)
R49	1-216-864-11	s	RESISTOR,CHIP 0 1/16W (1608)
R50	1-218-875-11	s	RESISTOR,CHIP 15K 1/16W (1608)
R59	1-218-871-11	s	RESISTOR,CHIP 10K 1/16W (1608)
R60	1-218-887-11	s	RESISTOR,CHIP 47K 1/16W (1608)
R62	1-218-845-11	s	RESISTOR,CHIP 820 1/16W (1608)
R64	1-218-849-11	s	RESISTOR,CHIP 1.2K 1/16W(1608)
R65	1-218-695-11	s	RESISTOR,CHIP 1.3K 1/16W(1608)
R66	1-218-843-11	s	RESISTOR,CHIP 680 1/16W (1608)
R67	1-218-845-11	s	RESISTOR,CHIP 820 1/16W (1608)
R69	1-218-849-11	s	RESISTOR,CHIP 1.2K 1/16W(1608)
R70	1-218-704-11	s	RESISTOR,CHIP 3.3K 1/16W(1608)
R71	1-218-853-11	s	RESISTOR,CHIP 1.8K 1/16W(1608)
R72	1-218-855-11	s	RESISTOR,CHIP 2.2K 1/16W(1608)
R73	1-218-823-11	s	RESISTOR,CHIP 100 1/16W (1608)
R74	1-218-823-11	s	RESISTOR,CHIP 100 1/16W (1608)
R75	1-218-855-11	s	RESISTOR,CHIP 2.2K 1/16W(1608)
R76	1-216-853-11	s	RESISTOR,CHIP 470K 1/16W 1608
R77	1-216-853-11	s	RESISTOR,CHIP 470K 1/16W 1608
R78	1-218-895-11	s	RESISTOR,CHIP 100K 1/16W(1608)
R79	1-218-895-11	s	RESISTOR,CHIP 100K 1/16W(1608)
R80	1-211-969-11	s	RESISTOR,CHIP 10 1/16W (1608)
R81	1-211-969-11	s	RESISTOR,CHIP 10 1/16W (1608)
R82	1-218-881-11	s	RESISTOR, CHIP 27K 1/16W(1608)
R83	1-218-891-11	s	RESISTOR,CHIP 68K 1/16W (1608)
R84	1-218-839-11	s	RESISTOR,CHIP 470 1/16W (1608)
R85	1-218-851-11	s	RESISTOR,CHIP 1.5K 1/16W(1608)
R86	1-218-863-11	s	RESIATOR,CHIP 4.7K 1/16W(1608)
R87	1-216-864-11	s	RESISTOR,CHIP 0 1/16W (1608)
R92	1-218-891-11	s	RESISTOR,CHIP 68K 1/16W (1608)
R93	1-218-880-11	s	RESISTOR,CHIP 24K 1/16W (1608)
R94	1-218-847-11	s	RESISTOR, CHIP 1K 1/16W (1608)
R97	1-216-864-11	s	RESISTOR,CHIP 0 1/16W (1608)
R99	1-218-878-11	s	RESISTOR,CHIP 20K 1/16W (1608)
R103	1-216-864-11	s	RESISTOR,CHIP 0 1/16W (1608)
R104	1-218-875-11	s	RESISTOR,CHIP 15K 1/16W (1608)
R105	1-218-853-11	s	RESISTOR,CHIP 1.8K 1/16W(1608)
R106	1-216-864-11	s	RESISTOR,CHIP 0 1/16W (1608)
R107	1-218-875-11	s	RESISTOR,CHIP 15K 1/16W (1608)
R108	1-218-853-11	s	RESISTOR,CHIP 1.8K 1/16W(1608)
R109	1-211-969-11	s	RESISTOR,CHIP 10 1/16W (1608)
R110	1-218-878-11	s	RESISTOR,CHIP 20K 1/16W (1608)
R112	1-216-864-11	s	RESISTOR,CHIP 0 1/16W (1608)
R113	1-216-864-11	s	RESISTOR,CHIP 0 1/16W (1608)
RV1	1-241-263-11	s	RESISTOR ADJ 5K (CERMET)

PA-254B BOARD

Ref. No. or Q'ty	Part No.	SP	Description
*1: [Lot N0. 031-185(UC), 031-171(J), 031-185(CE)]			
*2: [Lot No. 191-]			
*3: [Lot No. 031-1A4(UC), 031-1A1(J), 031-1A4(CE)]			
1pc *3	1-956-514-11	o	HARNESS, SUB (PA187-1)
46pcs	1-565-977-11	s	TERMINAL, SOLDERLESS
2pcs	1-569-520-11	o	HOUSING, CONNECTOR 10P
1pc *3	1-956-515-11	o	HARNESS, SUB (PA187-2)
2pcs	1-569-621-11	o	HOUSING, CONNECTOR 12P
1pc	1-569-617-11	o	HOUSING, CONNECTOR 2P
1pc	1-569-680-11	o	HOUSING, CONNECTOR 2P
C1	1-135-213-21	s	CAPACITOR TANTALUM 3.3MF/25V
C2	1-107-690-11	s	CAPACITOR TANTALUM 6.8MF/35V
C3	1-135-213-21	s	CAPACITOR TANTALUM 3.3MF/25V
C4	1-162-970-11	s	CAPACITOR CERAMIC 0.01MF/25V B
C5	1-135-213-21	s	CAPACITOR TANTALUM 3.3MF/25V
C6	1-135-213-21	s	CAPACITOR TANTALUM 3.3MF/25V
C7	1-162-965-11	s	CAPACITOR,CERAMIC 1500PF/50V B
C8	1-113-981-11	s	CAPACITOR TANTALUM 22MF/20V
C10	1-162-970-11	s	CAPACITOR CERAMIC 0.01MF/25V B
C12	1-107-690-11	s	CAPACITOR TANTALUM 6.8MF/35V
C14	1-113-682-11	s	CAPACITOR,TANTALUM 33MF/10V
C18	1-162-922-11	s	CAPACITOR,CERAMIC 39PF/50V CH
C20	1-164-156-11	s	CAPACITOR,CERAMIC 0.1MF/25V F
C21	1-162-922-11	s	CAPACITOR,CERAMIC 39PF/50V CH
C23	1-162-922-11	s	CAPACITOR,CERAMIC 39PF/50V CH
C27	1-135-259-11	s	CAPACITOR,TANTALUM 10MF/6.3V
C28	1-164-156-11	s	CAPACITOR,CERAMIC 0.1MF/25V F
C29 *1	1-162-909-11	s	CAPACITOR,CERAMIC 4PF/50V CH
*2	1-162-907-11	s	CAPACITOR,CERAMIC 2PF/50V(CK)
C30	1-113-682-11	s	CAPACITOR,TANTALUM 33MF/10V
C31 *1	1-162-909-11	s	CAPACITOR,CERAMIC 4PF/50V CH
*2	1-162-907-11	s	CAPACITOR,CERAMIC 2PF/50V(CK)
C32	1-162-916-11	s	CAPACITOR,CERAMIC 12PF/50V CH
C33	1-164-156-11	s	CAPACITOR,CERAMIC 0.1MF/25V F
C34	1-113-682-11	s	CAPACITOR,TANTALUM 33MF/10V
C35	1-164-156-11	s	CAPACITOR,CERAMIC 0.1MF/25V F
C36	1-164-156-11	s	CAPACITOR,CERAMIC 0.1MF/25V F
C37	1-115-581-11	s	CAPACITOR CHIP ELECT 100MF/16V
C39	1-164-156-11	s	CAPACITOR,CERAMIC 0.1MF/25V F
C40	1-164-156-11	s	CAPACITOR,CERAMIC 0.1MF/25V F
C45	1-135-177-21	s	CAPACITOR TANTALUM 1MF/25V
C46	1-117-205-11	s	CAPACITOR TANTALUM 3.3MF/50V
C47	1-162-970-11	s	CAPACITOR CERAMIC 0.01MF/25V B
C48	1-104-851-11	s	CAPACITOR,TANTALUM 10MF/10V
C49	1-115-581-11	s	CAPACITOR CHIP ELECT 100MF/16V
C50	1-115-581-11	s	CAPACITOR CHIP ELECT 100MF/16V
C55	1-162-922-11	s	CAPACITOR,CERAMIC 39PF/50V CH
C56	1-164-156-11	s	CAPACITOR,CERAMIC 0.1MF/25V F
C57	1-162-922-11	s	CAPACITOR,CERAMIC 39PF/50V CH
C58	1-164-156-11	s	CAPACITOR,CERAMIC 0.1MF/25V F
C59	1-164-156-11	s	CAPACITOR,CERAMIC 0.1MF/25V F
C62	1-113-682-11	s	CAPACITOR,TANTALUM 33MF/10V
C63	1-164-156-11	s	CAPACITOR,CERAMIC 0.1MF/25V F
C64	1-104-851-11	s	CAPACITOR,TANTALUM 10MF/10V
C65	1-164-156-11	s	CAPACITOR,CERAMIC 0.1MF/25V F
C67	1-164-156-11	s	CAPACITOR,CERAMIC 0.1MF/25V F
C68	1-164-156-11	s	CAPACITOR,CERAMIC 0.1MF/25V F

(PA-254B BOARD)

Ref. No. or Q'ty	Part No.	SP	Description
C70	1-164-156-11	s	CAPACITOR,CERAMIC 0.1MF/25V F
CN2	1-766-382-11	s	PIN, CONNECTOR (10P)(SMD)(1.5M
CN3	1-695-320-71	o	PIN, CONNECTOR (1.5MM)(SMD) 2P
D1	8-719-059-50	s	DIODE MA3J142DOLSO
D2	8-719-059-50	s	DIODE MA3J142DOLSO
D5	8-719-986-76	s	DIODE SB007W03C
FB1	1-543-775-11	s	BEAD, FERRITE
IC2	8-759-196-93	s	IC TC7SH00FU-TE85R
IC4	8-759-985-17	s	IC 74AC04SJ
IC6	8-759-196-93	s	IC TC7SH00FU-TE85R
Q1	8-729-402-19	s	TRANSISTOR XN6501
Q2	8-729-117-32	s	TRANSISTOR 2SC4177
Q3	8-729-101-25	s	TRANSISTOR 2SC1009A
Q5	8-729-117-72	s	TRANSISTOR 2SC4178
Q7	8-729-143-07	s	TRANSISTOR 2SA1610-Y33
Q8	8-729-143-07	s	TRANSISTOR 2SA1610-Y33
Q10	8-729-117-32	s	TRANSISTOR 2SC4177
Q11	8-729-143-07	s	TRANSISTOR 2SA1610-Y33
Q12	8-729-117-32	s	TRANSISTOR 2SC4177
Q14	8-729-143-07	s	TRANSISTOR 2SA1610-Y33
Q15	8-729-117-32	s	TRANSISTOR 2SC4177
Q18	8-729-117-32	s	TRANSISTOR 2SC4177
Q24	8-729-143-07	s	TRANSISTOR 2SA1610-Y33
Q25	8-729-143-07	s	TRANSISTOR 2SA1610-Y33
Q26	8-729-143-07	s	TRANSISTOR 2SA1610-Y33
Q27	8-729-117-72	s	TRANSISTOR 2SC4178
Q28	8-729-117-32	s	TRANSISTOR 2SC4177
Q29	8-729-117-32	s	TRANSISTOR 2SC4177
Q32	8-729-117-72	s	TRANSISTOR 2SC4178
Q33	8-729-143-07	s	TRANSISTOR 2SA1610-Y33
Q35	8-729-117-32	s	TRANSISTOR 2SC4177
Q36	8-729-140-63	s	TRANSISTOR 2SA1611-M5M6
Q38	8-729-117-32	s	TRANSISTOR 2SC4177
Q39	8-729-140-63	s	TRANSISTOR 2SA1611-M5M6
R1	1-218-871-11	s	RESISTOR,CHIP 10K 1/16W (1608)
R3	1-218-887-11	s	RESISTOR,CHIP 47K 1/16W (1608)
R4	1-218-885-11	s	RESISTOR,CHIP 39K 1/16W (1608)
R5	1-216-857-11	s	RESISTOR,CHIP 1M 1/16W(1608)
R6	1-218-883-11	s	RESISTOR,CHIP 33K 1/16W (1608)
R7	1-218-871-11	s	RESISTOR,CHIP 10K 1/16W (1608)
R8	1-216-857-11	s	RESISTOR,CHIP 1M 1/16W(1608)
R9	1-218-871-11	s	RESISTOR,CHIP 10K 1/16W (1608)
R10	1-218-885-11	s	RESISTOR,CHIP 39K 1/16W (1608)
R11	1-218-875-11	s	RESISTOR,CHIP 15K 1/16W (1608)
R12	1-218-844-11	s	RESISTOR,CHIP 750 1/16W (1608)
R13	1-218-823-11	s	RESISTOR,CHIP 100 1/16W (1608)
R14	1-218-859-11	s	RESISTOR,CHIP 3.3K 1/16W(1608)
R20	1-218-843-11	s	RESISTOR,CHIP 680 1/16W (1608)
R28	1-218-849-11	s	RESISTOR,CHIP 1.2K 1/16W(1608)
R29	1-218-849-11	s	RESISTOR,CHIP 1.2K 1/16W(1608)
R30	1-218-823-11	s	RESISTOR,CHIP 100 1/16W (1608)
R33	1-218-823-11	s	RESISTOR,CHIP 100 1/16W (1608)
R34	1-218-853-11	s	RESISTOR,CHIP 1.8K 1/16W(1608)
R35	1-218-895-11	s	RESISTOR,CHIP 100K 1/16W(1608)
R36	1-211-983-11	s	RESISTOR,CHIP 39 1/16W (1608)
R38	1-218-849-11	s	RESISTOR,CHIP 1.2K 1/16W(1608)

(PA-254B BOARD)

Ref. No. or Q'ty	Part No.	SP	Description
R40	1-218-853-11	s	RESISTOR,CHIP 1.8K 1/16W(1608)
R41	1-218-823-11	s	RESISTOR,CHIP 100 1/16W (1608)
R43	1-211-983-11	s	RESISTOR,CHIP 39 1/16W (1608)
R44	1-218-849-11	s	RESISTOR,CHIP 1.2K 1/16W(1608)
R47	1-218-855-11	s	RESISTOR,CHIP 2.2K 1/16W(1608)
R49	1-211-983-11	s	RESISTOR,CHIP 39 1/16W (1608)
R50	1-218-855-11	s	RESISTOR,CHIP 2.2K 1/16W(1608)
R59	1-218-878-11	s	RESISTOR,CHIP 20K 1/16W (1608)
R60	1-218-888-11	s	RESISTOR,CHIP 51K 1/16W (1608)
R62 *1	1-218-855-11	s	RESISTOR,CHIP 2.2K 1/16W(1608)
*2	1-218-845-11	s	RESISTOR,CHIP 820 1/16W (1608)
R64 *1	1-218-871-11	s	RESISTOR,CHIP 10K 1/16W (1608)
*2	1-218-860-11	s	RESISTOR,CHIP 3.6K 1/16W(1608)
R65	1-218-850-11	s	RESISTOR,CHIP 1.3K 1/16W(1608)
R66	1-218-839-11	s	RESISTOR,CHIP 470 1/16W (1608)
R67 *1	1-218-855-11	s	RESISTOR,CHIP 2.2K 1/16W(1608)
*2	1-218-845-11	s	RESISTOR,CHIP 820 1/16W (1608)
R69 *1	1-218-871-11	s	RESISTOR,CHIP 10K 1/16W (1608)
*2	1-218-860-11	s	RESISTOR,CHIP 3.6K 1/16W(1608)
R70	1-218-859-11	s	RESISTOR,CHIP 3.3K 1/16W(1608)
R71	1-218-853-11	s	RESISTOR,CHIP 1.8K 1/16W(1608)
R72	1-218-855-11	s	RESISTOR,CHIP 2.2K 1/16W(1608)
R73	1-218-823-11	s	RESISTOR,CHIP 100 1/16W (1608)
R74	1-218-823-11	s	RESISTOR,CHIP 100 1/16W (1608)
R75	1-218-863-11	s	RESISTOR,CHIP 4.7K 1/16W(1608)
R76	1-218-911-11	s	RESISTOR,CHIP 470K 1/16W(1608)
R77	1-218-911-11	s	RESISTOR,CHIP 470K 1/16W(1608)
R78	1-218-895-11	s	RESISTOR,CHIP 100K 1/16W(1608)
R79	1-218-895-11	s	RESISTOR,CHIP 100K 1/16W(1608)
R80	1-211-969-11	s	RESISTOR,CHIP 10 1/16W (1608)
R81	1-211-969-11	s	RESISTOR,CHIP 10 1/16W (1608)
R82	1-218-881-11	s	RESISTOR, CHIP 27K 1/16W(1608)
R83	1-218-871-11	s	RESISTOR,CHIP 10K 1/16W (1608)
R84	1-218-848-11	s	RESISTOR,CHIP 1.1K 1/16W(1608)
R85	1-218-851-11	s	RESISTOR,CHIP 1.5K 1/16W(1608)
R86	1-218-855-11	s	RESISTOR,CHIP 2.2K 1/16W(1608)
R87	1-211-969-11	s	RESISTOR,CHIP 10 1/16W (1608)
R92	1-218-889-11	s	RESISTOR,CHIP 56K 1/16W(1608)
R93	1-218-880-11	s	RESISTOR,CHIP 24K 1/16W (1608)
R94	1-218-847-11	s	RESISTOR, CHIP 1K 1/16W (1608)
R97	1-218-823-11	s	RESISTOR,CHIP 100 1/16W (1608)
R99	1-218-891-11	s	RESISTOR,CHIP 68K 1/16W (1608)
R103	1-211-983-11	s	RESISTOR,CHIP 39 1/16W (1608)
R104	1-218-871-11	s	RESISTOR,CHIP 10K 1/16W (1608)
R105	1-218-849-11	s	RESISTOR,CHIP 1.2K 1/16W(1608)
R106	1-211-983-11	s	RESISTOR,CHIP 39 1/16W (1608)
R107	1-218-871-11	s	RESISTOR,CHIP 10K 1/16W (1608)
R108	1-218-849-11	s	RESISTOR,CHIP 1.2K 1/16W(1608)
R109	1-211-969-11	s	RESISTOR,CHIP 10 1/16W (1608)
R110	1-218-891-11	s	RESISTOR,CHIP 68K 1/16W (1608)
R111	1-211-969-11	s	RESISTOR,CHIP 10 1/16W (1608)
R112	1-211-969-11	s	RESISTOR,CHIP 10 1/16W (1608)
R113	1-211-969-11	s	RESISTOR,CHIP 10 1/16W (1608)
R114	1-211-969-11	s	RESISTOR,CHIP 10 1/16W (1608)
R115	1-211-969-11	s	RESISTOR,CHIP 10 1/16W (1608)
R116	1-211-969-11	s	RESISTOR,CHIP 10 1/16W (1608)
RV1	1-241-263-11	s	RESISTOR ADJ 5K (CERMET)

PA-255B BOARD

Ref. No. or Q'ty	Part No.	SP	Description
*1: [Lot N0. 031-185(UC), 031-171(J), 031-185(CE)]			
*2: [Lot No. 191-]			
*3: [Lot No. 031-1A4(UC), 031-1A1(J), 031-1A4(CE)]			
2pcs *3	1-956-515-11	o	HARNESS, SUB (PA187-2)
26pcs	1-565-977-11	s	TERMINAL, SOLDERLESS
2pcs	1-569-621-11	o	HOUSING, CONNECTOR 12P
1pc	1-569-617-11	o	HOUSING, CONNECTOR 2P
1pc	1-569-680-11	o	HOUSING, CONNECTOR 2P
C1	1-135-213-21	s	CAPACITOR TANTALUM 3.3MF/25V
C2	1-107-690-11	s	CAPACITOR TANTALUM 6.8MF/35V
C3	1-135-213-21	s	CAPACITOR TANTALUM 3.3MF/25V
C4	1-162-970-11	s	CAPACITOR CERAMIC 0.01MF/25V B
C5	1-135-213-21	s	CAPACITOR TANTALUM 3.3MF/25V
C6	1-135-213-21	s	CAPACITOR TANTALUM 3.3MF/25V
C7	1-162-965-11	s	CAPACITOR,CERAMIC 1500PF/50V B
C8	1-113-981-11	s	CAPACITOR TANTALUM 22MF/20V
C10	1-162-970-11	s	CAPACITOR CERAMIC 0.01MF/25V B
C12	1-107-690-11	s	CAPACITOR TANTALUM 6.8MF/35V
C14	1-113-682-11	s	CAPACITOR,TANTALUM 33MF/10V
C18	1-162-922-11	s	CAPACITOR,CERAMIC 39PF/50V CH
C20	1-164-156-11	s	CAPACITOR,CERAMIC 0.1MF/25V F
C21	1-162-922-11	s	CAPACITOR,CERAMIC 39PF/50V CH
C23	1-162-922-11	s	CAPACITOR,CERAMIC 39PF/50V CH
C27	1-135-259-11	s	CAPACITOR,TANTALUM 10MF/6.3V
C28	1-164-156-11	s	CAPACITOR,CERAMIC 0.1MF/25V F
C29	1-162-913-11	s	CAPACITOR,CHIP CERAMIC 8PF/50V
C30	1-113-682-11	s	CAPACITOR,TANTALUM 33MF/10V
C31	1-162-913-11	s	CAPACITOR,CHIP CERAMIC 8PF/50V
C32	1-162-919-11	s	CAPACITOR,CERAMIC 22PF/50V CH
C33	1-164-156-11	s	CAPACITOR,CERAMIC 0.1MF/25V F
C34	1-113-682-11	s	CAPACITOR,TANTALUM 33MF/10V
C35	1-164-156-11	s	CAPACITOR,CERAMIC 0.1MF/25V F
C36	1-164-156-11	s	CAPACITOR,CERAMIC 0.1MF/25V F
C37	1-115-581-11	s	CAPACITOR CHIP ELECT 100MF/16V
C39	1-164-156-11	s	CAPACITOR,CERAMIC 0.1MF/25V F
C40	1-164-156-11	s	CAPACITOR,CERAMIC 0.1MF/25V F
C45	1-135-177-21	s	CAPACITOR TANTALUM 1MF/25V
C46	1-117-205-11	s	CAPACITOR TANTALUM 3.3MF/50V
C47	1-162-970-11	s	CAPACITOR CERAMIC 0.01MF/25V B
C48	1-104-851-11	s	CAPACITOR,TANTALUM 10MF/10V
C49	1-164-156-11	s	CAPACITOR,CERAMIC 0.1MF/25V F
C50	1-115-581-11	s	CAPACITOR CHIP ELECT 100MF/16V
C51	1-115-581-11	s	CAPACITOR CHIP ELECT 100MF/16V
C55	1-162-922-11	s	CAPACITOR,CERAMIC 39PF/50V CH
C56	1-164-156-11	s	CAPACITOR,CERAMIC 0.1MF/25V F
C57	1-162-922-11	s	CAPACITOR,CERAMIC 39PF/50V CH
C58	1-164-156-11	s	CAPACITOR,CERAMIC 0.1MF/25V F
C59	1-164-156-11	s	CAPACITOR,CERAMIC 0.1MF/25V F
C62	1-113-682-11	s	CAPACITOR,TANTALUM 33MF/10V
C63	1-164-156-11	s	CAPACITOR,CERAMIC 0.1MF/25V F
C64	1-104-851-11	s	CAPACITOR,TANTALUM 10MF/10V
C65	1-164-156-11	s	CAPACITOR,CERAMIC 0.1MF/25V F
C67	1-164-156-11	s	CAPACITOR,CERAMIC 0.1MF/25V F
C68	1-164-156-11	s	CAPACITOR,CERAMIC 0.1MF/25V F
C70	1-164-156-11	s	CAPACITOR,CERAMIC 0.1MF/25V F
CN3	1-695-320-71	o	PIN, CONNECTOR (1.5MM)(SMD) 2P
D1	8-719-059-50	s	DIODE MA3J142D0LS0
D2	8-719-059-50	s	DIODE MA3J142D0LS0

(PA-255B BOARD)

Ref. No. or Q'ty	Part No.	SP	Description
D5	8-719-986-76	s	DIODE SB007W03C
FB1	1-543-775-11	s	BEAD, FERRITE
IC2	8-759-196-93	s	IC TC7SH00FU-TE85R
IC3	8-759-075-53	s	IC LM35DM
IC4	8-759-985-17	s	IC 74AC04SJ
IC6	8-759-196-93	s	IC TC7SH00FU-TE85R
Q1	8-729-402-19	s	TRANSISTOR XN6501
Q2	8-729-117-32	s	TRANSISTOR 2SC4177
Q3	8-729-101-25	s	TRANSISTOR 2SC1009A
Q5	8-729-117-72	s	TRANSISTOR 2SC4178
Q7	8-729-143-07	s	TRANSISTOR 2SA1610-Y33
Q8	8-729-143-07	s	TRANSISTOR 2SA1610-Y33
Q10	8-729-117-32	s	TRANSISTOR 2SC4177
Q11	8-729-143-07	s	TRANSISTOR 2SA1610-Y33
Q12	8-729-117-32	s	TRANSISTOR 2SC4177
Q14	8-729-143-07	s	TRANSISTOR 2SA1610-Y33
Q15	8-729-117-32	s	TRANSISTOR 2SC4177
Q18	8-729-117-32	s	TRANSISTOR 2SC4177
Q24	8-729-143-07	s	TRANSISTOR 2SA1610-Y33
Q25	8-729-143-07	s	TRANSISTOR 2SA1610-Y33
Q26	8-729-143-07	s	TRANSISTOR 2SA1610-Y33
Q27	8-729-117-72	s	TRANSISTOR 2SC4178
Q28	8-729-117-32	s	TRANSISTOR 2SC4177
Q29	8-729-117-32	s	TRANSISTOR 2SC4177
Q32	8-729-117-72	s	TRANSISTOR 2SC4178
Q33	8-729-143-07	s	TRANSISTOR 2SA1610-Y33
Q35	8-729-117-32	s	TRANSISTOR 2SC4177
Q36	8-729-140-63	s	TRANSISTOR 2SA1611-M5M6
Q38	8-729-117-32	s	TRANSISTOR 2SC4177
Q39	8-729-140-63	s	TRANSISTOR 2SA1611-M5M6
R1	1-218-871-11	s	RESISTOR,CHIP 10K 1/16W (1608)
R3	1-218-887-11	s	RESISTOR,CHIP 47K 1/16W (1608)
R4	1-218-885-11	s	RESISTOR,CHIP 39K 1/16W (1608)
R5	1-216-857-11	s	RESISTOR,CHIP 1M 1/16W(1608)
R6	1-218-883-11	s	RESISTOR,CHIP 33K 1/16W (1608)
R7	1-218-871-11	s	RESISTOR,CHIP 10K 1/16W (1608)
R8	1-216-857-11	s	RESISTOR,CHIP 1M 1/16W(1608)
R9	1-218-871-11	s	RESISTOR,CHIP 10K 1/16W (1608)
R10	1-218-885-11	s	RESISTOR,CHIP 39K 1/16W (1608)
R11	1-218-875-11	s	RESISTOR,CHIP 15K 1/16W (1608)
R12	1-218-844-11	s	RESISTOR,CHIP 750 1/16W (1608)
R13	1-218-823-11	s	RESISTOR,CHIP 100 1/16W (1608)
R14	1-218-859-11	s	RESISTOR,CHIP 3.3K 1/16W(1608)
R20	1-218-843-11	s	RESISTOR,CHIP 680 1/16W (1608)
R28	1-218-849-11	s	RESISTOR,CHIP 1.2K 1/16W(1608)
R29	1-218-849-11	s	RESISTOR,CHIP 1.2K 1/16W(1608)
R30	1-218-823-11	s	RESISTOR,CHIP 100 1/16W (1608)
R33	1-218-823-11	s	RESISTOR,CHIP 100 1/16W (1608)
R34	1-218-853-11	s	RESISTOR,CHIP 1.8K 1/16W(1608)
R35	1-218-895-11	s	RESISTOR,CHIP 100K 1/16W(1608)
R36	1-211-983-11	s	RESISTOR,CHIP 39 1/16W (1608)
R38	1-218-849-11	s	RESISTOR,CHIP 1.2K 1/16W(1608)
R40	1-218-853-11	s	RESISTOR,CHIP 1.8K 1/16W(1608)
R41	1-218-823-11	s	RESISTOR,CHIP 100 1/16W (1608)
R43	1-211-983-11	s	RESISTOR,CHIP 39 1/16W (1608)
R44	1-218-849-11	s	RESISTOR,CHIP 1.2K 1/16W(1608)
R47	1-218-855-11	s	RESISTOR,CHIP 2.2K 1/16W(1608)
R49	1-211-983-11	s	RESISTOR,CHIP 39 1/16W (1608)

(PA-255B BOARD)

Ref. No. or Q'ty	Part No.	SP	Description
R50	1-218-855-11	s	RESISTOR,CHIP 2.2K 1/16W(1608)
R59	1-218-878-11	s	RESISTOR,CHIP 20K 1/16W (1608)
R60	1-218-888-11	s	RESISTOR,CHIP 51K 1/16W (1608)
R62	1-218-849-11	s	RESISTOR,CHIP 1.2K 1/16W(1608)
R64 *1	1-218-847-11	s	RESISTOR,CHIP 1K 1/16W (1608)
*2	1-218-848-11	s	RESISTOR,CHIP 1.1K 1/16W(1608)
R65	1-218-850-11	s	RESISTOR,CHIP 1.3K 1/16W(1608)
R66	1-218-839-11	s	RESISTOR,CHIP 470 1/16W (1608)
R67	1-218-849-11	s	RESISTOR,CHIP 1.2K 1/16W(1608)
R69 *1	1-218-847-11	s	RESISTOR,CHIP 1K 1/16W (1608)
*2	1-218-848-11	s	RESISTOR,CHIP 1.1K 1/16W(1608)
R70	1-218-859-11	s	RESISTOR,CHIP 3.3K 1/16W(1608)
R71	1-218-853-11	s	RESISTOR,CHIP 1.8K 1/16W(1608)
R74	1-218-823-11	s	RESISTOR,CHIP 100 1/16W (1608)
R75	1-218-863-11	s	RESISTOR,CHIP 4.7K 1/16W(1608)
R76	1-218-911-11	s	RESISTOR,CHIP 470K 1/16W(1608)
R77	1-218-911-11	s	RESISTOR,CHIP 470K 1/16W(1608)
R78	1-218-895-11	s	RESISTOR,CHIP 100K 1/16W(1608)
R79	1-218-895-11	s	RESISTOR,CHIP 100K 1/16W(1608)
R80	1-211-969-11	s	RESISTOR,CHIP 10 1/16W (1608)
R81	1-211-969-11	s	RESISTOR,CHIP 10 1/16W (1608)
R82	1-218-881-11	s	RESISTOR, CHIP 27K 1/16W(1608)
R83	1-218-871-11	s	RESISTOR,CHIP 10K 1/16W (1608)
R84	1-218-848-11	s	RESISTOR,CHIP 1.1K 1/16W(1608)
R85	1-218-851-11	s	RESISTOR,CHIP 1.5K 1/16W(1608)
R86	1-218-855-11	s	RESISTOR,CHIP 2.2K 1/16W(1608)
R87	1-211-969-11	s	RESISTOR,CHIP 10 1/16W (1608)
R92	1-218-889-11	s	RESISTOR,CHIP 56K 1/16W(1608)
R93	1-218-880-11	s	RESISTOR,CHIP 24K 1/16W (1608)
R94	1-218-847-11	s	RESISTOR, CHIP 1K 1/16W (1608)
R96	1-218-839-11	s	RESISTOR,CHIP 470 1/16W (1608)
R97	1-218-823-11	s	RESISTOR,CHIP 100 1/16W (1608)
R99	1-218-881-11	s	RESISTOR, CHIP 27K 1/16W(1608)
R103	1-211-983-11	s	RESISTOR,CHIP 39 1/16W (1608)
R104	1-218-871-11	s	RESISTOR,CHIP 10K 1/16W (1608)
R105	1-218-849-11	s	RESISTOR,CHIP 1.2K 1/16W(1608)
R106	1-211-983-11	s	RESISTOR,CHIP 39 1/16W (1608)
R107	1-218-871-11	s	RESISTOR,CHIP 10K 1/16W (1608)
R108	1-218-849-11	s	RESISTOR,CHIP 1.2K 1/16W(1608)
R109	1-211-969-11	s	RESISTOR,CHIP 10 1/16W (1608)
R110	1-218-881-11	s	RESISTOR, CHIP 27K 1/16W(1608)
R111	1-211-969-11	s	RESISTOR,CHIP 10 1/16W (1608)
R112	1-211-969-11	s	RESISTOR,CHIP 10 1/16W (1608)
R113	1-211-969-11	s	RESISTOR,CHIP 10 1/16W (1608)
R114	1-211-969-11	s	RESISTOR,CHIP 10 1/16W (1608)
R115	1-211-969-11	s	RESISTOR,CHIP 10 1/16W (1608)
R116	1-211-969-11	s	RESISTOR,CHIP 10 1/16W (1608)

PA-256B BOARD

Ref. No. or Q'ty	Part No.	SP	Description
*1: [Lot No. 031-185(UC), 031-171(J), 031-185(CE)]			
2pcs *1	1-956-515-11	o	HARNESS, SUB (PA187-2)
26pcs	1-565-977-11	s	TERMINAL, SOLDERLESS
2pcs	1-569-621-11	o	HOUSING, CONNECTOR 12P
1pc	1-569-617-11	o	HOUSING, CONNECTOR 2P
1pc	1-569-680-11	o	HOUSING, CONNECTOR 2P
C1	1-135-213-21	s	CAPACITOR TANTALUM 3.3MF/25V
C2	1-107-690-11	s	CAPACITOR TANTALUM 6.8MF/35V
C3	1-135-213-21	s	CAPACITOR TANTALUM 3.3MF/25V
C4	1-162-970-11	s	CAPACITOR CERAMIC 0.01MF/25V B
C5	1-135-213-21	s	CAPACITOR TANTALUM 3.3MF/25V
C6	1-135-213-21	s	CAPACITOR TANTALUM 3.3MF/25V
C7	1-162-965-11	s	CAPACITOR,CERAMIC 1500PF/50V B
C8	1-113-981-11	s	CAPACITOR TANTALUM 22MF/20V
C10	1-162-970-11	s	CAPACITOR CERAMIC 0.01MF/25V B
C12	1-107-690-11	s	CAPACITOR TANTALUM 6.8MF/35V
C14	1-113-682-11	s	CAPACITOR,TANTALUM 33MF/10V
C18	1-162-922-11	s	CAPACITOR,CERAMIC 39PF/50V CH
C20	1-164-156-11	s	CAPACITOR,CERAMIC 0.1MF/25V F
C21	1-162-922-11	s	CAPACITOR,CERAMIC 39PF/50V CH
C23	1-162-922-11	s	CAPACITOR,CERAMIC 39PF/50V CH
C27	1-135-259-11	s	CAPACITOR,TANTALUM 10MF/6.3V
C28	1-164-156-11	s	CAPACITOR,CERAMIC 0.1MF/25V F
C29	1-162-910-11	s	CAPACITOR,CERAMIC 5PF/50V 1608
C30	1-113-682-11	s	CAPACITOR,TANTALUM 33MF/10V
C31	1-162-910-11	s	CAPACITOR,CERAMIC 5PF/50V 1608
C32	1-162-917-11	s	CAPACITOR,CERAMIC 15PF/50V CH
C33	1-164-156-11	s	CAPACITOR,CERAMIC 0.1MF/25V F
C34	1-113-682-11	s	CAPACITOR,TANTALUM 33MF/10V
C35	1-164-156-11	s	CAPACITOR,CERAMIC 0.1MF/25V F
C36	1-164-156-11	s	CAPACITOR,CERAMIC 0.1MF/25V F
C37	1-115-581-11	s	CAPACITOR CHIP ELECT 100MF/16V
C39	1-164-156-11	s	CAPACITOR,CERAMIC 0.1MF/25V F
C40	1-164-156-11	s	CAPACITOR,CERAMIC 0.1MF/25V F
C45	1-135-177-21	s	CAPACITOR TANTALUM 1MF/25V
C46	1-117-205-11	s	CAPACITOR TANTALUM 3.3MF/50V
C47	1-162-970-11	s	CAPACITOR CERAMIC 0.01MF/25V B
C48	1-104-851-11	s	CAPACITOR,TANTALUM 10MF/10V
C50	1-115-581-11	s	CAPACITOR CHIP ELECT 100MF/16V
C51	1-115-581-11	s	CAPACITOR CHIP ELECT 100MF/16V
C55	1-162-922-11	s	CAPACITOR,CERAMIC 39PF/50V CH
C56	1-164-156-11	s	CAPACITOR,CERAMIC 0.1MF/25V F
C57	1-162-922-11	s	CAPACITOR,CERAMIC 39PF/50V CH
C58	1-164-156-11	s	CAPACITOR,CERAMIC 0.1MF/25V F
C59	1-164-156-11	s	CAPACITOR,CERAMIC 0.1MF/25V F
C62	1-113-682-11	s	CAPACITOR,TANTALUM 33MF/10V
C63	1-164-156-11	s	CAPACITOR,CERAMIC 0.1MF/25V F
C64	1-104-851-11	s	CAPACITOR,TANTALUM 10MF/10V
C65	1-164-156-11	s	CAPACITOR,CERAMIC 0.1MF/25V F
C67	1-164-156-11	s	CAPACITOR,CERAMIC 0.1MF/25V F
C68	1-164-156-11	s	CAPACITOR,CERAMIC 0.1MF/25V F
C70	1-164-156-11	s	CAPACITOR,CERAMIC 0.1MF/25V F
CN3	1-695-320-71	o	PIN, CONNECTOR (1.5MM)(SMD) 2P
D1	8-719-059-50	s	DIODE MA3J142D0LS0
D2	8-719-059-50	s	DIODE MA3J142D0LS0
D5	8-719-986-76	s	DIODE SB007W03C

(PA-256B BOARD)

Ref. No. or Q'ty	Part No.	SP	Description
FB1	1-543-775-11	s	BEAD, FERRITE
IC2	8-759-196-93	s	IC TC7SH00FU-TE85R
IC4	8-759-985-17	s	IC 74AC04SJ
IC6	8-759-196-93	s	IC TC7SH00FU-TE85R
Q1	8-729-402-19	s	TRANSISTOR XN6501
Q2	8-729-117-32	s	TRANSISTOR 2SC4177
Q3	8-729-101-25	s	TRANSISTOR 2SC1009A
Q5	8-729-117-72	s	TRANSISTOR 2SC4178
Q7	8-729-143-07	s	TRANSISTOR 2SA1610-Y33
Q8	8-729-143-07	s	TRANSISTOR 2SA1610-Y33
Q10	8-729-117-32	s	TRANSISTOR 2SC4177
Q11	8-729-143-07	s	TRANSISTOR 2SA1610-Y33
Q12	8-729-117-32	s	TRANSISTOR 2SC4177
Q14	8-729-143-07	s	TRANSISTOR 2SA1610-Y33
Q15	8-729-117-32	s	TRANSISTOR 2SC4177
Q18	8-729-117-32	s	TRANSISTOR 2SC4177
Q24	8-729-143-07	s	TRANSISTOR 2SA1610-Y33
Q25	8-729-143-07	s	TRANSISTOR 2SA1610-Y33
Q26	8-729-143-07	s	TRANSISTOR 2SA1610-Y33
Q27	8-729-117-72	s	TRANSISTOR 2SC4178
Q28	8-729-117-32	s	TRANSISTOR 2SC4177
Q29	8-729-117-32	s	TRANSISTOR 2SC4177
Q32	8-729-117-72	s	TRANSISTOR 2SC4178
Q33	8-729-143-07	s	TRANSISTOR 2SA1610-Y33
Q35	8-729-117-32	s	TRANSISTOR 2SC4177
Q36	8-729-140-63	s	TRANSISTOR 2SA1611-M5M6
Q38	8-729-117-32	s	TRANSISTOR 2SC4177
Q39	8-729-140-63	s	TRANSISTOR 2SA1611-M5M6
R1	1-218-871-11	s	RESISTOR,CHIP 10K 1/16W (1608)
R3	1-218-887-11	s	RESISTOR,CHIP 47K 1/16W (1608)
R4	1-218-885-11	s	RESISTOR,CHIP 39K 1/16W (1608)
R5	1-216-857-11	s	RESISTOR,CHIP 1M 1/16W(1608)
R6	1-218-883-11	s	RESISTOR,CHIP 33K 1/16W (1608)
R7	1-218-871-11	s	RESISTOR,CHIP 10K 1/16W (1608)
R8	1-216-857-11	s	RESISTOR,CHIP 1M 1/16W(1608)
R9	1-218-871-11	s	RESISTOR,CHIP 10K 1/16W (1608)
R10	1-218-885-11	s	RESISTOR,CHIP 39K 1/16W (1608)
R11	1-218-875-11	s	RESISTOR,CHIP 15K 1/16W (1608)
R12	1-218-844-11	s	RESISTOR,CHIP 750 1/16W (1608)
R13	1-218-823-11	s	RESISTOR,CHIP 100 1/16W (1608)
R14	1-218-859-11	s	RESISTOR,CHIP 3.3K 1/16W(1608)
R20	1-218-843-11	s	RESISTOR,CHIP 680 1/16W (1608)
R28	1-218-849-11	s	RESISTOR,CHIP 1.2K 1/16W(1608)
R29	1-218-849-11	s	RESISTOR,CHIP 1.2K 1/16W(1608)
R30	1-218-823-11	s	RESISTOR,CHIP 100 1/16W (1608)
R33	1-218-823-11	s	RESISTOR,CHIP 100 1/16W (1608)
R34	1-218-853-11	s	RESISTOR,CHIP 1.8K 1/16W(1608)
R35	1-218-895-11	s	RESISTOR,CHIP 100K 1/16W(1608)
R36	1-211-983-11	s	RESISTOR,CHIP 39 1/16W (1608)
R38	1-218-849-11	s	RESISTOR,CHIP 1.2K 1/16W(1608)
R40	1-218-853-11	s	RESISTOR,CHIP 1.8K 1/16W(1608)
R41	1-218-823-11	s	RESISTOR,CHIP 100 1/16W (1608)
R43	1-211-983-11	s	RESISTOR,CHIP 39 1/16W (1608)
R44	1-218-849-11	s	RESISTOR,CHIP 1.2K 1/16W(1608)
R47	1-218-855-11	s	RESISTOR,CHIP 2.2K 1/16W(1608)
R49	1-211-983-11	s	RESISTOR,CHIP 39 1/16W (1608)
R50	1-218-855-11	s	RESISTOR,CHIP 2.2K 1/16W(1608)
R59	1-218-878-11	s	RESISTOR,CHIP 20K 1/16W (1608)

(PA-256B BOARD)

Ref. No. or Q'ty	Part No.	SP	Description
R60	1-218-888-11	s	RESISTOR,CHIP 51K 1/16W (1608)
R62	1-218-845-11	s	RESISTOR,CHIP 820 1/16W (1608)
R64	1-218-849-11	s	RESISTOR,CHIP 1.2K 1/16W(1608)
R65	1-218-850-11	s	RESISTOR,CHIP 1.3K 1/16W(1608)
R66	1-218-839-11	s	RESISTOR,CHIP 470 1/16W (1608)
R67	1-218-845-11	s	RESISTOR,CHIP 820 1/16W (1608)
R69	1-218-849-11	s	RESISTOR,CHIP 1.2K 1/16W(1608)
R70	1-218-859-11	s	RESISTOR,CHIP 3.3K 1/16W(1608)
R71	1-218-853-11	s	RESISTOR,CHIP 1.8K 1/16W(1608)
R72	1-218-855-11	s	RESISTOR,CHIP 2.2K 1/16W(1608)
R73	1-218-823-11	s	RESISTOR,CHIP 100 1/16W (1608)
R74	1-218-823-11	s	RESISTOR,CHIP 100 1/16W (1608)
R75	1-218-863-11	s	RESISTOR,CHIP 4.7K 1/16W(1608)
R76	1-218-911-11	s	RESISTOR,CHIP 470K 1/16W(1608)
R77	1-218-911-11	s	RESISTOR,CHIP 470K 1/16W(1608)
R78	1-218-895-11	s	RESISTOR,CHIP 100K 1/16W(1608)
R79	1-218-895-11	s	RESISTOR,CHIP 100K 1/16W(1608)
R80	1-211-969-11	s	RESISTOR,CHIP 10 1/16W (1608)
R81	1-211-969-11	s	RESISTOR,CHIP 10 1/16W (1608)
R82	1-218-881-11	s	RESISTOR, CHIP 27K 1/16W(1608)
R83	1-218-871-11	s	RESISTOR,CHIP 10K 1/16W (1608)
R84	1-218-848-11	s	RESISTOR,CHIP 1.1K 1/16W(1608)
R85	1-218-851-11	s	RESISTOR,CHIP 1.5K 1/16W(1608)
R86	1-218-855-11	s	RESISTOR,CHIP 2.2K 1/16W(1608)
R87	1-211-969-11	s	RESISTOR,CHIP 10 1/16W (1608)
R92	1-218-889-11	s	RESISTOR,CHIP 56K 1/16W(1608)
R93	1-218-880-11	s	RESISTOR,CHIP 24K 1/16W (1608)
R94	1-218-847-11	s	RESISTOR, CHIP 1K 1/16W (1608)
R97	1-218-823-11	s	RESISTOR,CHIP 100 1/16W (1608)
R99	1-218-878-11	s	RESISTOR,CHIP 20K 1/16W (1608)
R103	1-211-983-11	s	RESISTOR,CHIP 39 1/16W (1608)
R104	1-218-871-11	s	RESISTOR,CHIP 10K 1/16W (1608)
R105	1-218-849-11	s	RESISTOR,CHIP 1.2K 1/16W(1608)
R106	1-211-983-11	s	RESISTOR,CHIP 39 1/16W (1608)
R107	1-218-871-11	s	RESISTOR,CHIP 10K 1/16W (1608)
R108	1-218-849-11	s	RESISTOR,CHIP 1.2K 1/16W(1608)
R109	1-211-969-11	s	RESISTOR,CHIP 10 1/16W (1608)
R110	1-218-878-11	s	RESISTOR,CHIP 20K 1/16W (1608)
R111	1-211-969-11	s	RESISTOR,CHIP 10 1/16W (1608)
R112	1-211-969-11	s	RESISTOR,CHIP 10 1/16W (1608)
R113	1-211-969-11	s	RESISTOR,CHIP 10 1/16W (1608)
R114	1-211-969-11	s	RESISTOR,CHIP 10 1/16W (1608)
R115	1-211-969-11	s	RESISTOR,CHIP 10 1/16W (1608)
R116	1-211-969-11	s	RESISTOR,CHIP 10 1/16W (1608)
RV1	1-241-263-11	s	RESISTOR ADJ 5K (CERMET)

PS-570 BOARD

Ref. No. or Q'ty	Part No.	SP	Description
1pc	A-8322-176-A	o	MOUNTED CIRCUIT BOARD, PS-570
1pc	3-846-067-21	o	SPACER (C)
C901	1-111-059-11	s	ELECT 220MF 20% 25V
C902	1-163-038-00	s	CERAMIC, CHIP 0.1uF 25V
C903	1-163-038-00	s	CERAMIC, CHIP 0.1uF 25V
C904	1-163-038-00	s	CERAMIC, CHIP 0.1uF 25V
C905	1-163-038-00	s	CERAMIC, CHIP 0.1uF 25V
C906	1-127-520-11	s	ELECT 68uF 20% 20V
C907	1-163-037-11	s	CERAMIC, CHIP 0.022uF 10% 25V
C908	1-163-275-11	s	CERAMIC, CHIP 0.001uF 5% 50V
C909	1-107-690-11	s	TANTALUM, CHIP 6.8uF 20% 35V
C910	1-163-037-11	s	CERAMIC, CHIP 0.022uF 10% 25V
C911	1-104-760-11	s	CERAMIC, CHIP 0.047uF 10% 50V
C912	1-135-145-11	s	TANTALUM, CHIP 0.47uF 10% 35V
C913	1-163-038-00	s	CERAMIC, CHIP 0.1uF 25V
C914	1-163-237-11	s	CERAMIC, CHIP 27PF 5% 50V
C915	1-163-037-11	s	CERAMIC, CHIP 0.022uF 10% 25V
CN901	1-506-703-11	o	CONNECTOR POST HEADER,ILG (4P)
CN902	1-560-356-00	o	CONNECTOR POST HEADER,ILG (2P)
D901	8-719-023-54	s	DIODE EA60QC06-F
D902	8-719-941-86	s	DIODE DAN202U
FL901	1-117-193-11	s	CERAMIC 1.5MF 50V
IC901	8-759-701-36	s	IC NJM3403AM
IC902	8-759-521-35	s	IC TL5001CD
L901	1-421-459-21	s	COIL, CHOKE
L902	1-411-968-11	s	COIL, CHOKE 33uH
Q901	8-729-029-14	s	TRANSISTOR DTC144EUA-T106
Q903	8-729-028-91	s	TRANSISTOR DTA144EUA-T106
Q904	8-729-117-32	s	TRANSISTOR 2SC4177
Q905	8-729-140-63	s	TRANSISTOR 2SA1611-M5M6
Q906	8-729-043-74	s	TRANSISTOR SI4435DY-T1-REVA
Q907	8-729-117-32	s	TRANSISTOR 2SC4177
Q908	8-729-045-16	s	TRANSISTOR SI4410DY-T1-REVA
R901	1-216-097-00	s	METAL, CHIP 100K 5% 1/10W
R902	1-216-073-00	s	METAL, CHIP 10K 5% 1/10W
R903	1-216-073-00	s	METAL, CHIP 10K 5% 1/10W
R904	1-216-073-00	s	METAL, CHIP 10K 5% 1/10W
R905	1-216-013-00	s	METAL, CHIP 33 5% 1/10W
R906	1-219-989-11	s	METAL, CHIP 0.020 0.10% 1W
R907	1-216-029-00	s	METAL, CHIP 150 5% 1/10W
R908	1-208-807-11	s	METAL, CHIP 11K 0.50% 1/10W
R909	1-208-798-11	s	METAL, CHIP 4.7K 0.50% 1/10W
R910	1-208-830-11	s	METAL, CHIP 100K 0.50% 1/10W
R911	1-208-782-11	s	METAL, CHIP 1K 0.50% 1/10W
R912	1-216-025-11	s	METAL, CHIP 100 5% 1/10W
R913	1-216-105-00	s	METAL, CHIP 220K 5% 1/10W
R914	1-216-097-00	s	METAL, CHIP 100K 5% 1/10W
R915	1-216-073-00	s	METAL, CHIP 10K 5% 1/10W
R916	1-216-105-00	s	METAL, CHIP 220K 5% 1/10W
R917	1-216-065-00	s	METAL, CHIP 4.7K 5% 1/10W
R918	1-216-077-00	s	METAL, CHIP 15K 5% 1/10W
R919	1-216-049-91	s	METAL, CHIP 1K 5% 1/10W
R920	1-216-097-00	s	METAL, CHIP 100K 5% 1/10W

PSW-71 BOARD

Ref. No. or Q'ty	Part No.	SP	Description
1pc	A-8322-174-A	o	MOUNTED CIRCUIT BOARD, PSW-71
C301	1-163-021-91	s	CERAMIC 0.01uF 10% 50V
C303	1-163-021-91	s	CERAMIC 0.01uF 10% 50V
C305	1-163-021-91	s	CERAMIC 0.01uF 10% 50V
C306	1-163-021-91	s	CERAMIC 0.01uF 10% 50V
C307	1-163-038-00	s	CERAMIC, CHIP 0.1uF 25V
C308	1-163-038-00	s	CERAMIC, CHIP 0.1uF 25V
C309	1-163-005-11	s	CERAMIC, CHIP 470PF 10% 50V
C310	1-163-038-00	s	CERAMIC, CHIP 0.1uF 25V
CN301	1-695-890-21	o	PIN, CONNECTOR (PC BOARD) 12P
CN302	1-764-087-21	s	PIN, CONNECTOR (PC BOARD) 14P
CN304	1-506-485-11	s	CONNECTOR 6P, MALE
CN305	1-506-491-11	s	CONNECTOR 12P, MALE
CN306	1-778-652-11	o	CONNECTOR, FFC (ZIF) 50P
D301	8-719-938-78	s	DIODE SB10-05PCP
D302	8-719-800-76	s	DIODE 1SS226
D303	8-719-938-78	s	DIODE SB10-05PCP
D304	8-719-938-78	s	DIODE SB10-05PCP
D305	8-719-938-78	s	DIODE SB10-05PCP
IC301	8-759-530-05	s	IC TC4053BFT(EL,N)
IC302	8-759-659-71	s	IC SN74HC165APWR
IC303	8-759-268-32	s	IC SN74HC595ADB-E05
IC304	8-759-530-05	s	IC TC4053BFT(EL,N)
Q301	8-729-026-53	s	TRANSISTOR 2SA1576A-T106-QR
Q302	8-729-905-35	s	TRANSISTOR 2SC4081-R
Q303	8-729-905-35	s	TRANSISTOR 2SC4081-R
Q304	8-729-905-35	s	TRANSISTOR 2SC4081-R
Q308	8-729-905-35	s	TRANSISTOR 2SC4081-R
Q309	8-729-905-35	s	TRANSISTOR 2SC4081-R
Q310	8-729-905-35	s	TRANSISTOR 2SC4081-R
R301	1-216-097-00	s	METAL, CHIP 100K 5% 1/10W
R302	1-216-001-00	s	METAL, CHIP 10 5% 1/10W
R303	1-216-073-00	s	METAL, CHIP 10K 5% 1/10W
R304	1-216-001-00	s	METAL, CHIP 10 5% 1/10W
R305	1-216-001-00	s	METAL, CHIP 10 5% 1/10W
R306	1-216-001-00	s	METAL, CHIP 10 5% 1/10W
R307	1-216-001-00	s	METAL, CHIP 10 5% 1/10W
R308	1-216-097-00	s	METAL, CHIP 100K 5% 1/10W
R309	1-216-001-00	s	METAL, CHIP 10 5% 1/10W
R310	1-216-001-00	s	METAL, CHIP 10 5% 1/10W
R311	1-216-001-00	s	METAL, CHIP 10 5% 1/10W
R312	1-216-065-00	s	METAL, CHIP 4.7K 5% 1/10W
R313	1-220-250-11	s	METAL, CHIP 10 5% 1/2W
R314	1-216-073-00	s	METAL, CHIP 10K 5% 1/10W
R315	1-216-089-91	s	METAL, CHIP 47k 5% 1/10W
R316	1-220-250-11	s	METAL, CHIP 10 5% 1/2W
R318	1-216-001-00	s	METAL, CHIP 10 5% 1/10W
R319	1-216-051-00	s	METAL, CHIP 1.2K 5% 1/10W
R320	1-216-025-11	s	METAL, CHIP 100 5% 1/10W
R321	1-216-025-11	s	METAL, CHIP 100 5% 1/10W
R322	1-208-793-11	s	METAL, CHIP 3K 0.50% 1/10W
R323	1-216-061-00	s	METAL, CHIP 3.3K 5% 1/10W
R324	1-216-097-00	s	METAL, CHIP 100K 5% 1/10W
R325	1-216-073-00	s	METAL, CHIP 10K 5% 1/10W
R326	1-216-057-00	s	METAL, CHIP 2.2K 5% 1/10W
R327	1-216-073-00	s	METAL, CHIP 10K 5% 1/10W
R328	1-216-097-00	s	METAL, CHIP 100K 5% 1/10W

(PSW-71 BOARD)

Ref. No. or Q'ty	Part No.	SP	Description
R329	1-216-097-00	s	METAL, CHIP 100K 5% 1/10W
R330	1-208-782-11	s	METAL, CHIP 1K 0.50% 1/10W
R331	1-208-782-11	s	METAL, CHIP 1K 0.50% 1/10W
R333	1-216-025-11	s	METAL, CHIP 100 5% 1/10W
R334	1-216-105-00	s	METAL, CHIP 220K 5% 1/10W
R335	1-216-105-00	s	METAL, CHIP 220K 5% 1/10W
R336	1-216-049-91	s	METAL, CHIP 1K 5% 1/10W
R337	1-216-025-11	s	METAL, CHIP 100 5% 1/10W
R338	1-216-061-00	s	METAL, CHIP 3.3K 5% 1/10W
R339	1-216-073-00	s	METAL, CHIP 10K 5% 1/10W
R340	1-216-025-11	s	METAL, CHIP 100 5% 1/10W
R341	1-216-099-00	s	METAL, CHIP 120K 5% 1/10W
R342	1-216-109-00	s	METAL, CHIP 330K 5% 1/10W
R343	1-216-073-00	s	METAL, CHIP 10K 5% 1/10W
RB301	1-239-444-11	s	RESUSTIR BLOCK, CHIP 220K
RB302	1-236-908-11	s	RESISTOR, NETWORK, CHIP 10k
RB304	1-236-908-11	s	RESISTOR, NETWORK, CHIP 10k
RB305	1-239-444-11	s	RESUSTIR BLOCK, CHIP 220K
RB306	1-239-412-11	s	NETWORK RESISTOR (CHIP) 100
S301	1-771-356-11	s	SWITCH, TOGGLE
S304	1-692-827-11	s	SWITCH, KEY BOARD
S306	1-571-642-11	s	SWITCH, TOGGLE

RP-91 BOARD

Ref. No. or Q'ty	Part No.	SP	Description
1pc	A-8277-852-A	o	MOUNTED CIRCUIT BOARD, RP-91
C770	1-135-259-11	s	TANTALUM, CHIP 10uF 20% 6.3
C771	1-162-970-11	s	CERAMIC, CHIP 0.01uF 10% 25V
C772	1-164-156-11	s	CERAMIC, CHIP 0.1uF 25V
C773	1-162-969-11	s	CERAMIC, CHIP 0.0068uF 10% 25V
C774	1-164-156-11	s	CERAMIC, CHIP 0.1uF 25V
C775	1-164-156-11	s	CERAMIC, CHIP 0.1uF 25V
C776	1-162-923-11	s	CERAMIC, CHIP 47PF 5% 50V
C777	1-162-923-11	s	CERAMIC, CHIP 47PF 5% 50V
C778	1-162-970-11	s	CERAMIC, CHIP 0.01uF 10% 25V
C779	1-162-970-11	s	CERAMIC, CHIP 0.01uF 10% 25V
C780	1-162-970-11	s	CERAMIC, CHIP 0.01uF 10% 25V
C781	1-162-970-11	s	CERAMIC, CHIP 0.01uF 10% 25V
C782	1-162-970-11	s	CERAMIC, CHIP 0.01uF 10% 25V
C783	1-135-259-11	s	TANTALUM, CHIP 10uF 20% 6.3
C784	1-162-970-11	s	CERAMIC, CHIP 0.01uF 10% 25V
C785	1-164-156-11	s	CERAMIC, CHIP 0.1uF 25V
C786	1-162-970-11	s	CERAMIC, CHIP 0.01uF 10% 25V
C787	1-135-259-11	s	TANTALUM, CHIP 10uF 20% 6.3
C788	1-104-851-11	s	TANTALUM, CHIP 10uF 20% 10V
C789	1-162-970-11	s	CERAMIC, CHIP 0.01uF 10% 25V
C791	1-162-970-11	s	CERAMIC, CHIP 0.01uF 10% 25V
C792	1-110-569-11	s	TANTALUM, CHIP 47uF 20% 6.3V
C793	1-164-156-11	s	CERAMIC, CHIP 0.1uF 25V
C794	1-164-156-11	s	CERAMIC, CHIP 0.1uF 25V
C795	1-135-259-11	s	TANTALUM, CHIP 10uF 20% 6.3
C796	1-162-970-11	s	CERAMIC, CHIP 0.01uF 10% 25V
C797	1-164-156-11	s	CERAMIC, CHIP 0.1uF 25V
C798	1-162-970-11	s	CERAMIC, CHIP 0.01uF 10% 25V
C799	1-164-217-11	s	CERAMIC, CHIP 150PF 5% 50V
C800	1-113-682-11	s	TANTALUM, CHIP 33uF 20% 10V
C801	1-162-970-11	s	CERAMIC, CHIP 0.01uF 10% 25V
C802	1-162-970-11	s	CERAMIC, CHIP 0.01uF 10% 25V
C803	1-164-217-11	s	CERAMIC, CHIP 150PF 5% 50V
C804	1-164-156-11	s	CERAMIC, CHIP 0.1uF 25V
C806	1-164-156-11	s	CERAMIC, CHIP 0.1uF 25V
C809	1-162-970-11	s	CERAMIC, CHIP 0.01uF 10% 25V
C810	1-104-851-11	s	TANTALUM, CHIP 10uF 20% 10V
C811	1-135-145-11	s	TANTALUM, CHIP 0.47uF 10% 35V
C814	1-162-970-11	s	CERAMIC, CHIP 0.01uF 10% 25V
C815	1-162-964-11	s	CERAMIC, CHIP 0.001uF 10% 50V
C816	1-162-964-11	s	CERAMIC, CHIP 0.001uF 10% 50V
C818	1-162-964-11	s	CERAMIC, CHIP 0.001uF 10% 50V
C819	1-162-970-11	s	CERAMIC, CHIP 0.01uF 10% 25V
C821	1-164-156-11	s	CERAMIC, CHIP 0.1uF 25V
C822	1-164-156-11	s	CERAMIC, CHIP 0.1uF 25V
C823	1-164-156-11	s	CERAMIC, CHIP 0.1uF 25V
C824	1-162-970-11	s	CERAMIC, CHIP 0.01uF 10% 25V
C825	1-164-315-11	s	CERAMIC, CHIP 470PF 5% 50V
C826	1-162-970-11	s	CERAMIC, CHIP 0.01uF 10% 25V
C827	1-162-970-11	s	CERAMIC, CHIP 0.01uF 10% 25V
C828	1-162-970-11	s	CERAMIC, CHIP 0.01uF 10% 25V
C829	1-135-259-11	s	TANTALUM, CHIP 10uF 20% 6.3
C830	1-164-156-11	s	CERAMIC, CHIP 0.1uF 25V
C831	1-135-259-11	s	TANTALUM, CHIP 10uF 20% 6.3
C832	1-164-156-11	s	CERAMIC, CHIP 0.1uF 25V
C833	1-162-970-11	s	CERAMIC, CHIP 0.01uF 10% 25V
C834	1-162-970-11	s	CERAMIC, CHIP 0.01uF 10% 25V

(RP-91 BOARD)

Ref. No. or Q'ty	Part No.	SP	Description
C835	1-162-970-11	s	CERAMIC, CHIP 0.01uF 10% 25V
C836	1-162-970-11	s	CERAMIC, CHIP 0.01uF 10% 25V
C837	1-162-970-11	s	CERAMIC, CHIP 0.01uF 10% 25V
C839	1-162-913-11	s	CERAMIC, CHIP 8PF 50V
C841	1-162-923-11	s	CERAMIC, CHIP 47PF 5% 50V
C842	1-164-156-11	s	CERAMIC, CHIP 0.1uF 25V
C843	1-164-677-11	s	CERAMIC, CHIP 0.033uF 10% 16V
C844	1-164-677-11	s	CERAMIC, CHIP 0.033uF 10% 16V
C845	1-162-964-11	s	CERAMIC, CHIP 0.001uF 10% 50V
C847	1-162-970-11	s	CERAMIC, CHIP 0.01uF 10% 25V
C848	1-104-851-11	s	TANTALUM, CHIP 10uF 20% 10V
C849	1-162-970-11	s	CERAMIC, CHIP 0.01uF 10% 25V
C850	1-162-970-11	s	CERAMIC, CHIP 0.01uF 10% 25V
C853	1-162-970-11	s	CERAMIC, CHIP 0.01uF 10% 25V
C854	1-113-642-11	s	TANTALUM, CHIP 47uF 20% 10V
C855	1-113-642-11	s	TANTALUM, CHIP 47uF 20% 10V
C857	1-162-927-11	s	CERAMIC, CHIP 100PF 5% 50V
C859	1-162-970-11	s	CERAMIC, CHIP 0.01uF 10% 25V
C860	1-162-970-11	s	CERAMIC, CHIP 0.01uF 10% 25V
C861	1-162-970-11	s	CERAMIC, CHIP 0.01uF 10% 25V
C862	1-162-970-11	s	CERAMIC, CHIP 0.01uF 10% 25V
C863	1-164-156-11	s	CERAMIC, CHIP 0.1uF 25V
C865	1-162-927-11	s	CERAMIC, CHIP 100PF 5% 50V
C869	1-162-925-11	s	CERAMIC, CHIP 68PF 5% 50V
C870	1-162-927-11	s	CERAMIC, CHIP 100PF 5% 50V
C871	1-162-925-11	s	CERAMIC, CHIP 68PF 5% 50V
C872	1-164-156-11	s	CERAMIC, CHIP 0.1uF 25V
C873	1-162-970-11	s	CERAMIC, CHIP 0.01uF 10% 25V
C874	1-162-970-11	s	CERAMIC, CHIP 0.01uF 10% 25V
C875	1-135-259-11	s	TANTALUM, CHIP 10uF 20% 6.3
C876	1-135-259-11	s	TANTALUM, CHIP 10uF 20% 6.3
C878	1-164-315-11	s	CERAMIC, CHIP 470PF 5% 50V
C900	1-104-851-11	s	TANTALUM, CHIP 10uF 20% 10V
C901	1-162-970-11	s	CERAMIC, CHIP 0.01uF 10% 25V
C902	1-162-966-11	s	CERAMIC, CHIP 0.0022uF 10% 50V
C903	1-164-217-11	s	CERAMIC, CHIP 150PF 5% 50V
C904	1-164-217-11	s	CERAMIC, CHIP 150PF 5% 50V
C905	1-162-970-11	s	CERAMIC, CHIP 0.01uF 10% 25V
C906	1-164-227-11	s	CERAMIC, CHIP 0.022uF 10% 25V
C907	1-162-970-11	s	CERAMIC, CHIP 0.01uF 10% 25V
C908	1-162-970-11	s	CERAMIC, CHIP 0.01uF 10% 25V
C909	1-162-970-11	s	CERAMIC, CHIP 0.01uF 10% 25V
C910	1-162-970-11	s	CERAMIC, CHIP 0.01uF 10% 25V
C911	1-104-852-11	s	TANTALUM, CHIP 22uF 20% 10V
C912	1-162-970-11	s	CERAMIC, CHIP 0.01uF 10% 25V
C913	1-164-156-11	s	CERAMIC, CHIP 0.1uF 25V
C914	1-164-156-11	s	CERAMIC, CHIP 0.1uF 25V
CN771	1-566-542-31	s	CONNECTOR, FPC (NON ZIF) 10P
CN772	1-774-260-11	o	CONNECTOR, FFC (ZIF) 20P
CN773	1-778-535-11	o	CONNECTOR, FFC (ZIF) 45P
CN774	1-778-645-11	o	CONNECTOR, FFC (ZIF) 10P
CN775	1-573-371-21	s	CONNECTOR, BOARD TO BOARD 14P
D771	8-719-059-51	s	DIODE MA3J142E0LSO
D772	8-719-059-51	s	DIODE MA3J142E0LSO
D773	8-719-041-39	s	DIODE KV1470
D774	8-719-052-27	s	DIODE 1SS351-TB
D775	8-719-052-27	s	DIODE 1SS351-TB
D776	8-719-027-95	s	DIODE HSM88WK

(RP-91 BOARD)

Ref. No. or Q'ty	Part No.	SP	Description
FL770	1-411-274-21	s	LINE, LC DELAY (23NS)
FL771	1-233-343-21	s	FILTER, LOW PASS
FL772	1-233-344-21	s	FILTER, LOW PASS
FL900	1-233-351-21	s	FILTER, BAND PASS
FL901	1-233-350-21	s	FILTER, BAND PASS
IC770	8-759-469-25	s	IC AK6440AF-E2
IC771	8-759-064-36	s	IC MB88346BPFV
IC772	8-752-371-18	s	IC CXD2302Q
IC773	8-752-070-12	s	IC CXA1762Q
IC774	8-752-379-36	s	IC CXD2189AR-T6
IC775	8-752-070-11	s	IC CXA1761R
IC777	8-752-067-87	s	IC CXA1760Q
IC778	8-759-058-62	s	IC TC7S08FU(TE85R)
IC900	8-759-327-00	s	IC CXA8044Q-T4
IC901	8-759-082-60	s	IC TC7S66FU
L770	1-414-398-11	s	INDUCTOR 10uH
L772	1-414-398-11	s	INDUCTOR 10uH
L773	1-414-398-11	s	INDUCTOR 10uH
L774	1-414-398-11	s	INDUCTOR 10uH
L776	1-414-398-11	s	INDUCTOR 10uH
L777	1-414-398-11	s	INDUCTOR 10uH
L779	1-410-738-41	s	INDUCTOR CHIP 0.56uH
L780	1-414-398-11	s	INDUCTOR 10uH
L782	1-412-963-11	s	INDUCTOR 100uH
L783	1-414-398-11	s	INDUCTOR 10uH
L787	1-410-381-11	s	INDUCTOR, CHIP 10uH
L788	1-410-380-31	s	INDUCTOR, CHIP 8.2uH
L789	1-414-398-11	s	INDUCTOR 10uH
L791	1-414-398-11	s	INDUCTOR 10uH
L900	1-414-398-11	s	INDUCTOR 10uH
L901	1-412-282-41	s	INDUCTOR, CHIP 470UH
Q772	8-729-907-00	s	TRANSISTOR DTC114EU
Q773	8-729-141-48	s	TRANSISTOR 2SB624-BV345
Q774	8-729-141-48	s	TRANSISTOR 2SB624-BV345
Q775	8-729-907-00	s	TRANSISTOR DTC114EU
Q776	8-729-905-35	s	TRANSISTOR 2SC4081-R
Q777	8-729-905-35	s	TRANSISTOR 2SC4081-R
Q778	8-729-905-35	s	TRANSISTOR 2SC4081-R
Q779	8-729-905-35	s	TRANSISTOR 2SC4081-R
Q780	8-729-907-00	s	TRANSISTOR DTC114EU
Q781	8-729-026-53	s	TRANSISTOR 2SA1576A-T106-QR
Q782	8-729-026-53	s	TRANSISTOR 2SA1576A-T106-QR
Q784	8-729-026-53	s	TRANSISTOR 2SA1576A-T106-QR
Q900	8-729-907-00	s	TRANSISTOR DTC114EU
Q901	8-729-037-92	s	TRANSISTOR 2SD2216J-R(TX).SO
R770	1-216-845-11	s	METAL, CHIP 100K 5% 1/16W
R771	1-216-864-11	s	METAL, CHIP 0 5% 1/16W
R774	1-216-841-11	s	METAL, CHIP 47K 5% 1/16W
R776	1-216-818-11	s	METAL, CHIP 560 5% 1/16W
R777	1-218-674-11	s	METAL, CHIP 180 0.50% 1/16W
R778	1-216-864-11	s	METAL, CHIP 0 5% 1/16W
R779	1-218-744-11	s	METAL, CHIP 150K 0.50% 1/16W
R780	1-218-724-11	s	METAL, CHIP 22K 5% 1/16W
R781	1-216-821-11	s	METAL, CHIP 1K 5% 1/16W
R782	1-218-716-11	s	METAL, CHIP 10K 0.50% 1/16W
R783	1-218-716-11	s	METAL, CHIP 10K 0.50% 1/16W
R784	1-216-833-91	s	METAL, CHIP 10K 5% 1/16W
R785	1-216-833-91	s	METAL, CHIP 10K 5% 1/16W

(RP-91 BOARD)

Ref. No. or Q'ty	Part No.	SP	Description
R786	1-218-684-11	s	METAL, CHIP 470 0.50% 1/16W
R787	1-218-677-11	s	METAL, CHIP 240 0.50% 1/16W
R788	1-218-677-11	s	METAL, CHIP 240 0.50% 1/16W
R789	1-216-824-11	s	METAL, CHIP 1.8K 5% 1/16W
R790	1-216-841-11	s	METAL, CHIP 47K 5% 1/16W
R791	1-218-680-11	s	METAL, CHIP 330 0.50% 1/16W
R792	1-216-814-11	s	METAL, CHIP 270 5% 1/16W
R793	1-216-815-11	s	METAL, CHIP 330 5% 1/16W
R794	1-218-682-11	s	METAL, CHIP 390 0.50% 1/16W
R795	1-218-680-11	s	METAL, CHIP 330 0.50% 1/16W
R796	1-218-668-11	s	METAL, CHIP 100 0.50% 1/16W
R797	1-216-815-11	s	METAL, CHIP 330 5% 1/16W
R798	1-218-680-11	s	METAL, CHIP 330 0.50% 1/16W
R799	1-218-700-11	s	METAL, CHIP 2.2K 0.50% 1/16W
R800	1-218-732-11	s	METAL, CHIP 47K 0.50% 1/16W
R801	1-218-732-11	s	METAL, CHIP 47K 0.50% 1/16W
R802	1-218-732-11	s	METAL, CHIP 47K 0.50% 1/16W
R803	1-216-864-11	s	METAL, CHIP 0 5% 1/16W
R804	1-218-718-11	s	METAL, CHIP 12K 0.50% 1/16W
R805	1-218-718-11	s	METAL, CHIP 12K 0.50% 1/16W
R808	1-218-692-11	s	METAL, CHIP 1K 0.50% 1/16W
R809	1-216-864-11	s	METAL, CHIP 0 5% 1/16W
R810	1-218-718-11	s	METAL, CHIP 12K 0.50% 1/16W
R811	1-218-718-11	s	METAL, CHIP 12K 0.50% 1/16W
R812	1-218-718-11	s	METAL, CHIP 12K 0.50% 1/16W
R813	1-218-718-11	s	METAL, CHIP 12K 0.50% 1/16W
R814	1-216-853-11	s	METAL, CHIP 470K 5% 1/16W
R815	1-216-853-11	s	METAL, CHIP 470K 5% 1/16W
R816	1-216-829-11	s	METAL, CHIP 4.7K 5% 1/16W
R817	1-216-829-11	s	METAL, CHIP 4.7K 5% 1/16W
R818	1-216-829-11	s	METAL, CHIP 4.7K 5% 1/16W
R819	1-216-831-11	s	METAL, CHIP 6.8K 5% 1/16W
R820	1-216-803-11	s	METAL, CHIP 33 5% 1/16W
R821	1-216-833-91	s	METAL, CHIP 10K 5% 1/16W
R822	1-216-834-11	s	METAL, CHIP 12K 5% 1/16W
R823	1-216-834-11	s	METAL, CHIP 12K 5% 1/16W
R824	1-216-821-11	s	METAL, CHIP 1K 5% 1/16W
R825	1-216-835-11	s	METAL, CHIP 15K 5% 1/16W
R826	1-216-833-91	s	METAL, CHIP 10K 5% 1/16W
R827	1-216-821-11	s	METAL, CHIP 1K 5% 1/16W
R828	1-218-720-11	s	METAL, CHIP 15K 0.50% 1/16W
R829	1-218-720-11	s	METAL, CHIP 15K 0.50% 1/16W
R830	1-218-710-91	s	METAL 5.6K 0.50% 1/16W
R831	1-218-710-91	s	METAL 5.6K 0.50% 1/16W
R832	1-216-807-11	s	METAL, CHIP 68 5% 1/16W
R833	1-216-821-11	s	METAL, CHIP 1K 5% 1/16W
R834	1-216-821-11	s	METAL, CHIP 1K 5% 1/16W
R835	1-216-821-11	s	METAL, CHIP 1K 5% 1/16W
R836	1-216-839-11	s	METAL, CHIP 33K 5% 1/16W
R837	1-216-821-11	s	METAL, CHIP 1K 5% 1/16W
R838	1-216-821-11	s	METAL, CHIP 1K 5% 1/16W
R839	1-216-821-11	s	METAL, CHIP 1K 5% 1/16W
R841	1-216-837-11	s	METAL, CHIP 22K 5% 1/16W
R843	1-218-688-11	s	METAL, CHIP 680 0.50% 1/16W
R844	1-218-688-11	s	METAL, CHIP 680 0.50% 1/16W
R845	1-218-678-11	s	METAL, CHIP 270 0.50% 1/16W
R846	1-218-676-11	s	METAL, CHIP 220 0.50% 1/16W
R847	1-216-805-11	s	METAL, CHIP 47 5% 1/16W
R848	1-218-686-11	s	METAL, CHIP 560 0.50% 1/16W

(RP-91 BOARD)

Ref. No. or Q'ty	Part No.	SP	Description
R849	1-218-682-11	s	METAL, CHIP 390 0.50% 1/16W
R850	1-218-680-11	s	METAL, CHIP 330 0.50% 1/16W
R851	1-218-680-11	s	METAL, CHIP 330 0.50% 1/16W
R852	1-218-682-11	s	METAL, CHIP 390 0.50% 1/16W
R855	1-218-718-11	s	METAL, CHIP 12K 0.50% 1/16W
R856	1-218-718-11	s	METAL, CHIP 12K 0.50% 1/16W
R858	1-218-682-11	s	METAL, CHIP 390 0.50% 1/16W
R859	1-216-853-11	s	METAL, CHIP 470K 5% 1/16W
R861	1-216-864-11	s	METAL, CHIP 0 5% 1/16W
R862	1-216-864-11	s	METAL, CHIP 0 5% 1/16W
R900	1-216-843-11	s	METAL, CHIP 68K 5% 1/16W
R901	1-216-831-11	s	METAL, CHIP 6.8K 5% 1/16W
R902	1-216-831-11	s	METAL, CHIP 6.8K 5% 1/16W
R903	1-216-839-11	s	METAL, CHIP 33K 5% 1/16W
R904	1-216-845-11	s	METAL, CHIP 100K 5% 1/16W
R905	1-216-825-11	s	METAL, CHIP 2.2K 5% 1/16W
R906	1-216-825-11	s	METAL, CHIP 2.2K 5% 1/16W
R907	1-216-835-11	s	METAL, CHIP 15K 5% 1/16W
R908	1-216-833-91	s	METAL, CHIP 10K 5% 1/16W
R909	1-216-834-11	s	METAL, CHIP 12K 5% 1/16W
R910	1-218-692-11	s	METAL, CHIP 1K 0.50% 1/16W
R911	1-218-716-11	s	METAL, CHIP 10K 0.50% 1/16W
R912	1-216-837-11	s	METAL, CHIP 22K 5% 1/16W
R913	1-218-692-11	s	METAL, CHIP 1K 0.50% 1/16W
R914	1-218-716-11	s	METAL, CHIP 10K 0.50% 1/16W
R915	1-216-837-11	s	METAL, CHIP 22K 5% 1/16W
R916	1-216-815-11	s	METAL, CHIP 330 5% 1/16W
R917	1-216-833-91	s	METAL, CHIP 10K 5% 1/16W
R918	1-216-833-91	s	METAL, CHIP 10K 5% 1/16W
R919	1-216-833-91	s	METAL, CHIP 10K 5% 1/16W
R920	1-216-821-11	s	METAL, CHIP 1K 5% 1/16W

SE-295 BOARD

Ref. No. or Q'ty	Part No.	SP	Description
*1,*2:For DSR-500WS/500WSP			
*1:Serial No. 10001-12420(UC), 30001-32110(J), 40001-42930(CE)			
*2:Serial No. 12421-(UC), 32111-(J), 42931-(CE)			
1pc	A-8277-830-B	o	MOUNTED CIRCUIT BOARD, SE-295
PH1 *1	8-719-948-58	s	DIODE GP2S07B
*2	8-749-012-20	s	PHOTO INTERRUPTER GP2S27B
PH2 *1	8-719-948-58	s	DIODE GP2S07B
*2	8-749-012-20	s	PHOTO INTERRUPTER GP2S27B
PH3 *1	8-719-948-58	s	DIODE GP2S07B
*2	8-749-012-20	s	PHOTO INTERRUPTER GP2S27B
PH4 *1	8-719-948-58	s	DIODE GP2S07B
*2	8-749-012-20	s	PHOTO INTERRUPTER GP2S27B
Q1	8-729-926-31	s	PHOTO TRANSISTOR PT483F1S

SE-297 BOARD

Ref. No. or Q'ty	Part No.	SP	Description
*1,*2:For DSR-500WS/500WSP			
*1:Serial No. 10001-12420(UC), 30001-32110(J), 40001-42930(CE)			
*2:Serial No. 12421-(UC), 32111-(J), 42931-(CE)			
D1	8-719-989-52	s	DIODE GL4600S
PH1 *1	8-719-948-58	s	DIODE GP2S07B
*2	8-749-012-20	s	PHOTO INTERRUPTER GP2S27B
PH2 *1	8-719-948-58	s	DIODE GP2S07B
*2	8-749-012-20	s	PHOTO INTERRUPTER GP2S27B
PH3 *1	8-719-948-58	s	DIODE GP2S07B
*2	8-749-012-20	s	PHOTO INTERRUPTER GP2S27B
PH4 *1	8-719-948-58	s	DIODE GP2S07B
*2	8-749-012-20	s	PHOTO INTERRUPTER GP2S27B
S1	1-692-366-31	s	SWITCH, PUSH (1 KEY)
TH1	1-808-656-11	s	THERMISTOR

SE-511 BOARD

Ref. No. or Q'ty	Part No.	SP	Description
1pc	1-673-960-11	o	PRINTED CIRCUIT BOARD, SE-511
CN1	1-573-806-21	s	PIN, CONNECTOR (1.5MM) (SMD)6P
PH1	8-749-925-05	s	REFLECTOR NJL5183KA-F20-TE1
PH2	8-749-925-05	s	REFLECTOR NJL5183KA-F20-TE1

SV-213 BOARD

Ref. No. or Q'ty	Part No.	SP	Description
1pc	A-8322-140-B	o	MOUNTED CIRCUIT BOARD, SV-213
C1	1-162-915-11	s	CERAMIC, CHIP 10PF 50V
C2	1-162-969-11	s	CERAMIC, CHIP 0.0068uF 10% 25V
C3	1-162-969-11	s	CERAMIC, CHIP 0.0068uF 10% 25V
C4	1-162-970-11	s	CERAMIC, CHIP 0.01uF 10% 25V
C5	1-162-923-11	s	CERAMIC, CHIP 47PF 5% 50V
C6	1-162-923-11	s	CERAMIC, CHIP 47PF 5% 50V
C7	1-164-156-11	s	CERAMIC, CHIP 0.1uF 25V
C8	1-164-156-11	s	CERAMIC, CHIP 0.1uF 25V
C9	1-164-156-11	s	CERAMIC, CHIP 0.1uF 25V
C10	1-164-156-11	s	CERAMIC, CHIP 0.1uF 25V
C11	1-164-156-11	s	CERAMIC, CHIP 0.1uF 25V
C13	1-165-176-11	s	CERAMIC, CHIP 0.047uF 10% 16V
C17	1-164-156-11	s	CERAMIC, CHIP 0.1uF 25V
C18	1-164-156-11	s	CERAMIC, CHIP 0.1uF 25V
C200	1-164-156-11	s	CERAMIC, CHIP 0.1uF 25V
C201	1-135-177-21	s	TANTALUM, CHIP 1uF 10% 25V
C202	1-164-156-11	s	CERAMIC, CHIP 0.1uF 25V
C203	1-164-156-11	s	CERAMIC, CHIP 0.1uF 25V
C204	1-164-156-11	s	CERAMIC, CHIP 0.1uF 25V
C205	1-162-923-11	s	CERAMIC, CHIP 47PF 5% 50V
C206	1-162-923-11	s	CERAMIC, CHIP 47PF 5% 50V
C207	1-164-156-11	s	CERAMIC, CHIP 0.1uF 25V
C208	1-162-923-11	s	CERAMIC, CHIP 47PF 5% 50V
C209	1-162-923-11	s	CERAMIC, CHIP 47PF 5% 50V
C210	1-164-156-11	s	CERAMIC, CHIP 0.1uF 25V
C211	1-164-156-11	s	CERAMIC, CHIP 0.1uF 25V
C212	1-164-156-11	s	CERAMIC, CHIP 0.1uF 25V
C300	1-162-970-11	s	CERAMIC, CHIP 0.01uF 10% 25V
C301	1-162-915-11	s	CERAMIC, CHIP 10PF 50V
C302	1-162-968-11	s	CERAMIC, CHIP 0.0047uF 10% 50V
C303	1-164-156-11	s	CERAMIC, CHIP 0.1uF 25V
C304	1-162-915-11	s	CERAMIC, CHIP 10PF 50V
C305	1-162-970-11	s	CERAMIC, CHIP 0.01uF 10% 25V
C306	1-162-915-11	s	CERAMIC, CHIP 10PF 50V
C309	1-162-915-11	s	CERAMIC, CHIP 10PF 50V
C310	1-164-156-11	s	CERAMIC, CHIP 0.1uF 25V
C311	1-135-259-11	s	TANTALUM, CHIP 10uF 20% 6.3
C312	1-135-259-11	s	TANTALUM, CHIP 10uF 20% 6.3
C313	1-162-970-11	s	CERAMIC, CHIP 0.01uF 10% 25V
C314	1-162-969-11	s	CERAMIC, CHIP 0.0068uF 10% 25V
C315	1-162-969-11	s	CERAMIC, CHIP 0.0068uF 10% 25V
C317	1-162-923-11	s	CERAMIC, CHIP 47PF 5% 50V
C318	1-162-923-11	s	CERAMIC, CHIP 47PF 5% 50V
C319	1-164-156-11	s	CERAMIC, CHIP 0.1uF 25V
C320	1-164-156-11	s	CERAMIC, CHIP 0.1uF 25V
C321	1-164-156-11	s	CERAMIC, CHIP 0.1uF 25V
C322	1-164-156-11	s	CERAMIC, CHIP 0.1uF 25V
C323	1-164-156-11	s	CERAMIC, CHIP 0.1uF 25V
C324	1-164-156-11	s	CERAMIC, CHIP 0.1uF 25V
C325	1-162-970-11	s	CERAMIC, CHIP 0.01uF 10% 25V
C326	1-164-156-11	s	CERAMIC, CHIP 0.1uF 25V
C327	1-164-156-11	s	CERAMIC, CHIP 0.1uF 25V
C328	1-104-851-11	s	TANTALUM, CHIP 10uF 20% 10V
C329	1-164-156-11	s	CERAMIC, CHIP 0.1uF 25V
C331	1-162-970-11	s	CERAMIC, CHIP 0.01uF 10% 25V
C332	1-164-156-11	s	CERAMIC, CHIP 0.1uF 25V
C333	1-164-156-11	s	CERAMIC, CHIP 0.1uF 25V

(SV-213 BOARD)

Ref. No. or Q'ty	Part No.	SP	Description
C334	1-164-156-11	s	CERAMIC, CHIP 0.1uF 25V
C400	1-162-923-11	s	CERAMIC, CHIP 47PF 5% 50V
C401	1-162-968-11	s	CERAMIC, CHIP 0.0047uF 10% 50V
C402	1-164-677-11	s	CERAMIC, CHIP 0.033uF 10% 16V
C403	1-135-259-11	s	TANTALUM, CHIP 10uF 20% 6.3
C404	1-164-156-11	s	CERAMIC, CHIP 0.1uF 25V
C405	1-104-852-11	s	TANTALUM, CHIP 22uF 20% 10V
C406	1-135-177-21	s	TANTALUM, CHIP 1uF 10% 25V
C407	1-162-923-11	s	CERAMIC, CHIP 47PF 5% 50V
C408	1-162-923-11	s	CERAMIC, CHIP 47PF 5% 50V
C409	1-164-156-11	s	CERAMIC, CHIP 0.1uF 25V
C410	1-162-969-11	s	CERAMIC, CHIP 0.0068uF 10% 25V
C411	1-164-156-11	s	CERAMIC, CHIP 0.1uF 25V
C412	1-162-964-11	s	CERAMIC, CHIP 0.001uF 10% 50V
C413	1-164-156-11	s	CERAMIC, CHIP 0.1uF 25V
C414	1-164-156-11	s	CERAMIC, CHIP 0.1uF 25V
C415	1-164-156-11	s	CERAMIC, CHIP 0.1uF 25V
C416	1-164-156-11	s	CERAMIC, CHIP 0.1uF 25V
C417	1-162-970-11	s	CERAMIC, CHIP 0.01uF 10% 25V
C418	1-162-970-11	s	CERAMIC, CHIP 0.01uF 10% 25V
C419	1-162-970-11	s	CERAMIC, CHIP 0.01uF 10% 25V
C420	1-165-176-11	s	CERAMIC, CHIP 0.047uF 10% 16V
C421	1-164-174-11	s	CERAMIC, CHIP 0.0082uF 10% 25V
C422	1-164-174-11	s	CERAMIC, CHIP 0.0082uF 10% 25V
C423	1-164-174-11	s	CERAMIC, CHIP 0.0082uF 10% 25V
C424	1-162-920-11	s	CERAMIC, CHIP 27PF 5% 50V
C425	1-164-156-11	s	CERAMIC, CHIP 0.1uF 25V
C426	1-162-970-11	s	CERAMIC, CHIP 0.01uF 10% 25V
C427	1-162-970-11	s	CERAMIC, CHIP 0.01uF 10% 25V
C428	1-164-156-11	s	CERAMIC, CHIP 0.1uF 25V
C429	1-162-923-11	s	CERAMIC, CHIP 47PF 5% 50V
C500	1-162-964-11	s	CERAMIC, CHIP 0.001uF 10% 50V
C501	1-162-927-11	s	CERAMIC, CHIP 100PF 5% 50V
C502	1-162-964-11	s	CERAMIC, CHIP 0.001uF 10% 50V
C503	1-162-964-11	s	CERAMIC, CHIP 0.001uF 10% 50V
C504	1-162-964-11	s	CERAMIC, CHIP 0.001uF 10% 50V
C505	1-162-964-11	s	CERAMIC, CHIP 0.001uF 10% 50V
C506	1-162-964-11	s	CERAMIC, CHIP 0.001uF 10% 50V
C507	1-162-964-11	s	CERAMIC, CHIP 0.001uF 10% 50V
C508	1-162-964-11	s	CERAMIC, CHIP 0.001uF 10% 50V
C509	1-162-964-11	s	CERAMIC, CHIP 0.001uF 10% 50V
C510	1-162-964-11	s	CERAMIC, CHIP 0.001uF 10% 50V
C512	1-164-156-11	s	CERAMIC, CHIP 0.1uF 25V
C516	1-113-642-11	s	TANTALUM, CHIP 47uF 20% 10V
C517	1-164-156-11	s	CERAMIC, CHIP 0.1uF 25V
C518	1-113-642-11	s	TANTALUM, CHIP 47uF 20% 10V
C520	1-110-569-11	s	TANTALUM, CHIP 47uF 20% 6.3V
C522	1-113-500-11	s	TANTALUM 100uF 20% 10V
C524	1-164-156-11	s	CERAMIC, CHIP 0.1uF 25V
C525	1-135-072-21	s	TANTALUM, CHIP 0.22uF 10% 35V
C526	1-165-128-11	s	CERAMIC, CHIP 0.22uF 16V
C527	1-164-315-11	s	CERAMIC, CHIP 470PF 5% 50V
C528	1-110-569-11	s	TANTALUM, CHIP 47uF 20% 6.3V
C529	1-162-970-11	s	CERAMIC, CHIP 0.01uF 10% 25V
C530	1-162-912-11	s	CERAMIC, CHIP 7PF 50V
C531	1-162-912-11	s	CERAMIC, CHIP 7PF 50V
C533	1-164-156-11	s	CERAMIC, CHIP 0.1uF 25V
C534	1-164-156-11	s	CERAMIC, CHIP 0.1uF 25V
C535	1-164-156-11	s	CERAMIC, CHIP 0.1uF 25V

(SV-213 BOARD)

Ref. No. or Q'ty	Part No.	SP	Description
C537	1-164-156-11	s	CERAMIC, CHIP 0.1uF 25V
C538	1-164-156-11	s	CERAMIC, CHIP 0.1uF 25V
C539	1-164-156-11	s	CERAMIC, CHIP 0.1uF 25V
C700	1-162-965-11	s	CERAMIC, CHIP 0.0015uF 10% 50V
C701	1-162-969-11	s	CERAMIC, CHIP 0.0068uF 10% 25V
C702	1-113-500-11	s	TANTALUM 100uF 20% 10V
C705	1-162-968-11	s	CERAMIC, CHIP 0.0047uF 10% 50V
C706	1-104-914-11	s	TANTALUM, CHIP 22uF 20% 16V
C707	1-164-156-11	s	CERAMIC, CHIP 0.1uF 25V
C740	1-162-925-11	s	CERAMIC, CHIP 68PF 5% 50V
C741	1-162-965-11	s	CERAMIC, CHIP 0.0015uF 10% 50V
C742	1-162-969-11	s	CERAMIC, CHIP 0.0068uF 10% 25V
C746	1-162-968-11	s	CERAMIC, CHIP 0.0047uF 10% 50V
C747	1-104-914-11	s	TANTALUM, CHIP 22uF 20% 16V
C748	1-164-156-11	s	CERAMIC, CHIP 0.1uF 25V
C749	1-162-965-11	s	CERAMIC, CHIP 0.0015uF 10% 50V
C750	1-162-969-11	s	CERAMIC, CHIP 0.0068uF 10% 25V
C754	1-162-968-11	s	CERAMIC, CHIP 0.0047uF 10% 50V
C755	1-104-914-11	s	TANTALUM, CHIP 22uF 20% 16V
C756	1-164-156-11	s	CERAMIC, CHIP 0.1uF 25V
C757	1-164-156-11	s	CERAMIC, CHIP 0.1uF 25V
C758	1-164-156-11	s	CERAMIC, CHIP 0.1uF 25V
C759	1-113-500-11	s	TANTALUM 100uF 20% 10V
C760	1-113-500-11	s	TANTALUM 100uF 20% 10V
C761	1-165-176-11	s	CERAMIC, CHIP 0.047uF 10% 16V
C801	1-164-156-11	s	CERAMIC, CHIP 0.1uF 25V
C802	1-164-156-11	s	CERAMIC, CHIP 0.1uF 25V
C901	1-162-970-11	s	CERAMIC, CHIP 0.01uF 10% 25V
C902	1-162-964-11	s	CERAMIC, CHIP 0.001uF 10% 50V
C903	1-164-156-11	s	CERAMIC, CHIP 0.1uF 25V
C904	1-164-156-11	s	CERAMIC, CHIP 0.1uF 25V
C905	1-164-156-11	s	CERAMIC, CHIP 0.1uF 25V
C906	1-164-156-11	s	CERAMIC, CHIP 0.1uF 25V
C907	1-164-315-11	s	CERAMIC, CHIP 470PF 5% 50V
C908	1-162-922-11	s	CERAMIC, CHIP 39PF 5% 50V
C909	1-165-176-11	s	CERAMIC, CHIP 0.047uF 10% 16V
C910	1-164-156-11	s	CERAMIC, CHIP 0.1uF 25V
C911	1-164-156-11	s	CERAMIC, CHIP 0.1uF 25V
C912	1-164-156-11	s	CERAMIC, CHIP 0.1uF 25V
CN500	1-750-905-11	o	CONNECTOR, BOARD TO BOARD 80P
CN501	1-778-648-11	o	CONNECTOR, FFC (ZIF) 20P
CN502	1-778-652-11	o	CONNECTOR, FFC (ZIF) 50P
CN504	1-764-526-11	s	CONNECTOR, FFC/FPC (ZIF) 18P
CN505	1-778-646-11	o	CONNECTOR, FFC (ZIF) 10P
D1	8-719-989-03	s	DIODE DAN222
D2	8-719-991-00	s	DIODE DAP222
D300	8-719-991-00	s	DIODE DAP222
D302	8-719-989-03	s	DIODE DAN222
D303	8-719-991-00	s	DIODE DAP222
D400	8-719-991-00	s	DIODE DAP222
D401	8-719-989-03	s	DIODE DAN222
D402	8-719-991-00	s	DIODE DAP222
D500	8-719-989-03	s	DIODE DAN222
D501	8-719-991-00	s	DIODE DAP222
D502	8-719-989-03	s	DIODE DAN222
D503	8-719-991-00	s	DIODE DAP222
D507	8-719-991-00	s	DIODE DAP222
D508	8-719-105-91	s	DIODE RD5.6M-B2
D701	8-719-981-56	s	DIODE SB05W05C

(SV-213 BOARD)

Ref. No. or Q'ty	Part No.	SP	Description
D702	8-719-989-03	s	DIODE DAN222
D801	8-719-989-03	s	DIODE DAN222
D802	8-719-991-00	s	DIODE DAP222
D803	8-719-989-03	s	DIODE DAN222
D804	8-719-991-00	s	DIODE DAP222
D805	8-719-989-03	s	DIODE DAN222
D806	8-719-991-00	s	DIODE DAP222
D807	8-719-989-03	s	DIODE DAN222
D808	8-719-991-00	s	DIODE DAP222
D809	8-719-989-03	s	DIODE DAN222
D810	8-719-991-00	s	DIODE DAP222
D811	8-719-989-03	s	DIODE DAN222
D812	8-719-991-00	s	DIODE DAP222
D813	8-719-989-03	s	DIODE DAN222
D814	8-719-991-00	s	DIODE DAP222
D815	8-719-989-03	s	DIODE DAN222
D816	8-719-991-00	s	DIODE DAP222
D901	8-719-048-43	s	DIODE MA795
IC1	8-759-326-99	s	IC MCD005AM-TLM
IC2	8-759-510-71	s	IC UPC358G2-E2
IC3	8-759-981-61	s	IC LM2901M
IC5	8-759-523-02	s	IC TC74HC4053AFT(EL)
IC6	8-759-700-07	s	IC NJM2903M
IC200	8-759-276-89	s	IC BA6285FP-E2
IC201	8-759-276-89	s	IC BA6285FP-E2
IC204	8-759-510-71	s	IC UPC358G2-E2
IC300	8-759-326-99	s	IC MCD005AM-TLM
IC301	8-759-278-58	s	IC NJM4558V-TE2
IC302	8-759-981-61	s	IC LM2901M
IC303	8-759-523-02	s	IC TC74HC4053AFT(EL)
IC304	8-759-523-95	s	IC TC74VHC74FT(EL)
IC305	8-759-510-71	s	IC UPC358G2-E2
IC306	8-759-444-93	s	IC RH5RL33AA-T1
IC307	8-759-523-02	s	IC TC74HC4053AFT(EL)
IC309	8-759-526-89	s	IC MB88347LPFV-ER
IC400	8-759-335-42	s	IC CXA1793N-E2
IC401	8-759-100-95	s	IC UPC324G2
IC402	8-759-700-07	s	IC NJM2903M
IC403	8-759-100-95	s	IC UPC324G2
IC500	8-752-921-61	s	IC CXP913040-011R
IC501	8-759-524-10	s	IC TC74VHC157FT(EL)
IC502	8-759-524-10	s	IC TC74VHC157FT(EL)
IC505	8-759-431-26	s	IC MB3793-30PNF-ER
IC507	8-759-524-41	s	IC TC74VHC374FT(EL)
IC508	8-759-524-41	s	IC TC74VHC374FT(EL)
IC509	8-759-524-41	s	IC TC74VHC374FT(EL)
IC510	8-759-524-41	s	IC TC74VHC374FT(EL)
IC512	8-759-524-50	s	IC TC74VHC541FT(EL)
IC702	8-759-444-93	s	IC RH5RL33AA-T1
IC740	8-759-273-87	s	IC NJM2901V(TE2)
IC741	8-759-444-87	s	IC NJM324V(TE2)
IC801	8-759-523-01	s	IC TC74HC4052AFT(EL)
IC802	8-759-523-01	s	IC TC74HC4052AFT(EL)
IC901	8-759-466-53	s	IC NJM2060V(TE2)
IC902	8-759-338-95	s	IC NJM2903V(TE2)
IC903	8-759-523-02	s	IC TC74HC4053AFT(EL)
IC904	8-759-392-01	s	IC TC7SH86FU-TE85R
L500	1-414-398-11	s	INDUCTOR 10uH

(SV-213 BOARD)

Ref. No. or Q'ty	Part No.	SP	Description
L501	1-414-398-11	s	INDUCTOR 10uH
L502	1-414-398-11	s	INDUCTOR 10uH
L700	1-409-678-11	s	INDUCTOR 68uH
L740	1-409-678-11	s	INDUCTOR 68uH
L741	1-409-678-11	s	INDUCTOR 68uH
Q700	8-729-030-78	s	TRANSISTOR FP102T-TL
Q701	8-729-929-99	s	TRANSISTOR UMB11-TN
Q740	8-729-030-78	s	TRANSISTOR FP102T-TL
Q745	8-729-030-78	s	TRANSISTOR FP102T-TL
Q748	8-729-026-53	s	TRANSISTOR 2SA1576A-T106-QR
Q749	8-729-807-51	s	TRANSISTOR 2SD1623-S
Q802	8-729-930-32	s	TRANSISTOR UMH11
Q803	8-729-930-18	s	TRANSISTOR UMH4-TN
Q804	8-729-930-18	s	TRANSISTOR UMH4-TN
Q805	8-729-930-18	s	TRANSISTOR UMH4-TN
Q806	8-729-930-32	s	TRANSISTOR UMH11
Q901	8-729-029-14	s	TRANSISTOR DTC144EUA-T106
R1	1-216-833-91	s	METAL, CHIP 10K 5% 1/16W
R3	1-216-821-11	s	METAL, CHIP 1K 5% 1/16W
R4	1-216-821-11	s	METAL, CHIP 1K 5% 1/16W
R5	1-216-845-11	s	METAL, CHIP 100K 5% 1/16W
R7	1-216-853-11	s	METAL, CHIP 470K 5% 1/16W
R8	1-216-833-91	s	METAL, CHIP 10K 5% 1/16W
R10	1-216-833-91	s	METAL, CHIP 10K 5% 1/16W
R11	1-216-845-11	s	METAL, CHIP 100K 5% 1/16W
R12	1-216-845-11	s	METAL, CHIP 100K 5% 1/16W
R13	1-216-853-11	s	METAL, CHIP 470K 5% 1/16W
R14	1-216-833-91	s	METAL, CHIP 10K 5% 1/16W
R16	1-216-833-91	s	METAL, CHIP 10K 5% 1/16W
R17	1-216-845-11	s	METAL, CHIP 100K 5% 1/16W
R18	1-216-845-11	s	METAL, CHIP 100K 5% 1/16W
R19	1-216-853-11	s	METAL, CHIP 470K 5% 1/16W
R20	1-216-833-91	s	METAL, CHIP 10K 5% 1/16W
R21	1-216-845-11	s	METAL, CHIP 100K 5% 1/16W
R27	1-216-845-11	s	METAL, CHIP 100K 5% 1/16W
R28	1-216-845-11	s	METAL, CHIP 100K 5% 1/16W
R29	1-216-833-91	s	METAL, CHIP 10K 5% 1/16W
R30	1-216-833-91	s	METAL, CHIP 10K 5% 1/16W
R31	1-216-849-11	s	METAL, CHIP 220K 5% 1/16W
R32	1-216-845-11	s	METAL, CHIP 100K 5% 1/16W
R33	1-216-849-11	s	METAL, CHIP 220K 5% 1/16W
R34	1-216-849-11	s	METAL, CHIP 220K 5% 1/16W
R35	1-216-833-11	s	METAL, CHIP 10K 5% 1/16W
R36	1-216-833-91	s	METAL, CHIP 10K 5% 1/16W
R37	1-216-845-11	s	METAL, CHIP 100K 5% 1/16W
R38	1-216-845-11	s	METAL, CHIP 100K 5% 1/16W
R39	1-216-833-91	s	METAL, CHIP 10K 5% 1/16W
R40	1-216-833-91	s	METAL, CHIP 10K 5% 1/16W
R41	1-217-671-11	s	METAL, CHIP 1 5% 1/10W
R42	1-217-671-11	s	METAL, CHIP 1 5% 1/10W
R43	1-217-671-11	s	METAL, CHIP 1 5% 1/10W
R44	1-217-671-11	s	METAL, CHIP 1 5% 1/10W
R45	1-216-842-11	s	METAL, CHIP 56K 5% 1/16W
R47	1-216-839-11	s	METAL, CHIP 33K 5% 1/16W
R48	1-216-839-11	s	METAL, CHIP 33K 5% 1/16W
R49	1-216-833-91	s	METAL, CHIP 10K 5% 1/16W
R203	1-216-827-11	s	METAL, CHIP 3.3K 5% 1/16W
R204	1-216-833-91	s	METAL, CHIP 10K 5% 1/16W

(SV-213 BOARD)

Ref. No. or Q'ty	Part No.	SP	Description
R205	1-216-845-11	s	METAL, CHIP 100K 5% 1/16W
R206	1-218-708-11	s	METAL, CHIP 4.7K 0.50% 1/16W
R207	1-218-682-11	s	METAL, CHIP 390 0.50% 1/16W
R208	1-218-708-11	s	METAL, CHIP 4.7K 0.50% 1/16W
R209	1-216-827-11	s	METAL, CHIP 3.3K 5% 1/16W
R210	1-216-845-11	s	METAL, CHIP 100K 5% 1/16W
R211	1-216-833-91	s	METAL, CHIP 10K 5% 1/16W
R219	1-216-845-11	s	METAL, CHIP 100K 5% 1/16W
R220	1-216-845-11	s	METAL, CHIP 100K 5% 1/16W
R222	1-216-845-11	s	METAL, CHIP 100K 5% 1/16W
R223	1-216-845-11	s	METAL, CHIP 100K 5% 1/16W
R225	1-216-852-11	s	METAL, CHIP 390K 5% 1/16W
R226	1-216-852-11	s	METAL, CHIP 390K 5% 1/16W
R227	1-216-833-91	s	METAL, CHIP 10K 5% 1/16W
R228	1-216-833-91	s	METAL, CHIP 10K 5% 1/16W
R229	1-217-671-11	s	METAL, CHIP 1 5% 1/10W
R230	1-217-671-11	s	METAL, CHIP 1 5% 1/10W
R231	1-217-671-11	s	METAL, CHIP 1 5% 1/10W
R232	1-217-671-11	s	METAL, CHIP 1 5% 1/10W
R233	1-216-821-11	s	METAL, CHIP 1K 5% 1/16W
R234	1-216-833-91	s	METAL, CHIP 10K 5% 1/16W
R235	1-216-821-11	s	METAL, CHIP 1K 5% 1/16W
R236	1-216-833-91	s	METAL, CHIP 10K 5% 1/16W
R238	1-216-845-11	s	METAL, CHIP 100K 5% 1/16W
R239	1-216-845-11	s	METAL, CHIP 100K 5% 1/16W
R241	1-216-845-11	s	METAL, CHIP 100K 5% 1/16W
R242	1-216-845-11	s	METAL, CHIP 100K 5% 1/16W
R244	1-216-852-11	s	METAL, CHIP 390K 5% 1/16W
R245	1-216-852-11	s	METAL, CHIP 390K 5% 1/16W
R246	1-216-833-91	s	METAL, CHIP 10K 5% 1/16W
R247	1-216-833-91	s	METAL, CHIP 10K 5% 1/16W
R248	1-217-671-11	s	METAL, CHIP 1 5% 1/10W
R249	1-217-671-11	s	METAL, CHIP 1 5% 1/10W
R250	1-217-671-11	s	METAL, CHIP 1 5% 1/10W
R251	1-217-671-11	s	METAL, CHIP 1 5% 1/10W
R252	1-216-821-11	s	METAL, CHIP 1K 5% 1/16W
R253	1-216-833-91	s	METAL, CHIP 10K 5% 1/16W
R254	1-216-821-11	s	METAL, CHIP 1K 5% 1/16W
R255	1-216-833-91	s	METAL, CHIP 10K 5% 1/16W
R300	1-218-708-11	s	METAL, CHIP 4.7K 0.50% 1/16W
R301	1-218-708-11	s	METAL, CHIP 4.7K 0.50% 1/16W
R302	1-216-821-11	s	METAL, CHIP 1K 5% 1/16W
R303	1-216-842-11	s	METAL, CHIP 56K 5% 1/16W
R304	1-216-821-11	s	METAL, CHIP 1K 5% 1/16W
R305	1-216-833-91	s	METAL, CHIP 10K 5% 1/16W
R306	1-216-833-91	s	METAL, CHIP 10K 5% 1/16W
R307	1-216-853-11	s	METAL, CHIP 470K 5% 1/16W
R308	1-216-825-11	s	METAL, CHIP 2.2K 5% 1/16W
R309	1-216-839-11	s	METAL, CHIP 33K 5% 1/16W
R310	1-216-843-11	s	METAL, CHIP 68K 5% 1/16W
R311	1-216-833-91	s	METAL, CHIP 10K 5% 1/16W
R312	1-216-853-11	s	METAL, CHIP 470K 5% 1/16W
R313	1-216-825-11	s	METAL, CHIP 2.2K 5% 1/16W
R314	1-218-708-11	s	METAL, CHIP 4.7K 0.50% 1/16W
R315	1-218-708-11	s	METAL, CHIP 4.7K 0.50% 1/16W
R316	1-216-821-11	s	METAL, CHIP 1K 5% 1/16W
R317	1-216-842-11	s	METAL, CHIP 56K 5% 1/16W
R318	1-216-845-11	s	METAL, CHIP 100K 5% 1/16W
R323	1-216-839-11	s	METAL, CHIP 33K 5% 1/16W

(SV-213 BOARD)

Ref. No. or Q'ty	Part No.	SP	Description
R324	1-216-843-11	s	METAL, CHIP 68K 5% 1/16W
R325	1-216-833-91	s	METAL, CHIP 10K 5% 1/16W
R326	1-216-853-11	s	METAL, CHIP 470K 5% 1/16W
R327	1-216-825-11	s	METAL, CHIP 2.2K 5% 1/16W
R328	1-218-740-11	s	METAL, CHIP 100K 0.50% 1/16W
R329	1-218-740-11	s	METAL, CHIP 100K 0.50% 1/16W
R330	1-216-845-11	s	METAL, CHIP 100K 5% 1/16W
R331	1-216-845-11	s	METAL, CHIP 100K 5% 1/16W
R332	1-216-833-91	s	METAL, CHIP 10K 5% 1/16W
R333	1-216-864-11	s	METAL, CHIP 0 5% 1/16W
R337	1-216-829-11	s	METAL, CHIP 4.7K 5% 1/16W
R339	1-216-833-91	s	METAL, CHIP 10K 5% 1/16W
R340	1-216-845-11	s	METAL, CHIP 100K 5% 1/16W
R341	1-216-845-11	s	METAL, CHIP 100K 5% 1/16W
R342	1-216-833-91	s	METAL, CHIP 10K 5% 1/16W
R343	1-216-833-91	s	METAL, CHIP 10K 5% 1/16W
R344	1-217-671-11	s	METAL, CHIP 1 5% 1/10W
R345	1-217-671-11	s	METAL, CHIP 1 5% 1/10W
R346	1-217-671-11	s	METAL, CHIP 1 5% 1/10W
R347	1-217-671-11	s	METAL, CHIP 1 5% 1/10W
R348	1-216-842-11	s	METAL, CHIP 56K 5% 1/16W
R400	1-216-821-11	s	METAL, CHIP 1K 5% 1/16W
R401	1-216-821-11	s	METAL, CHIP 1K 5% 1/16W
R402	1-216-833-91	s	METAL, CHIP 10K 5% 1/16W
R403	1-216-827-11	s	METAL, CHIP 3.3K 5% 1/16W
R404	1-216-845-11	s	METAL, CHIP 100K 5% 1/16W
R405	1-216-845-11	s	METAL, CHIP 100K 5% 1/16W
R406	1-216-821-11	s	METAL, CHIP 1K 5% 1/16W
R407	1-216-833-91	s	METAL, CHIP 10K 5% 1/16W
R408	1-216-853-11	s	METAL, CHIP 470K 5% 1/16W
R409	1-216-825-11	s	METAL, CHIP 2.2K 5% 1/16W
R410	1-216-843-11	s	METAL, CHIP 68K 5% 1/16W
R411	1-216-845-11	s	METAL, CHIP 100K 5% 1/16W
R412	1-216-821-11	s	METAL, CHIP 1K 5% 1/16W
R413	1-216-821-11	s	METAL, CHIP 1K 5% 1/16W
R414	1-216-845-11	s	METAL, CHIP 100K 5% 1/16W
R415	1-216-833-91	s	METAL, CHIP 10K 5% 1/16W
R416	1-216-833-91	s	METAL, CHIP 10K 5% 1/16W
R417	1-216-838-11	s	METAL, CHIP 27K 5% 1/16W
R418	1-216-833-91	s	METAL, CHIP 10K 5% 1/16W
R419	1-216-833-91	s	METAL, CHIP 10K 5% 1/16W
R420	1-216-845-11	s	METAL, CHIP 100K 5% 1/16W
R421	1-216-833-91	s	METAL, CHIP 10K 5% 1/16W
R422	1-216-845-11	s	METAL, CHIP 100K 5% 1/16W
R423	1-216-833-91	s	METAL, CHIP 10K 5% 1/16W
R424	1-216-845-11	s	METAL, CHIP 100K 5% 1/16W
R425	1-216-845-11	s	METAL, CHIP 100K 5% 1/16W
R426	1-216-833-91	s	METAL, CHIP 10K 5% 1/16W
R427	1-216-833-91	s	METAL, CHIP 10K 5% 1/16W
R428	1-216-833-91	s	METAL, CHIP 10K 5% 1/16W
R429	1-216-845-11	s	METAL, CHIP 100K 5% 1/16W
R430	1-216-846-11	s	METAL, CHIP 120K 5% 1/16W
R431	1-216-835-11	s	METAL, CHIP 15K 5% 1/16W
R432	1-216-843-11	s	METAL, CHIP 68K 5% 1/16W
R434	1-216-864-11	s	METAL, CHIP 0 5% 1/16W
R436	1-216-836-11	s	METAL, CHIP 18K 5% 1/16W
R437	1-216-834-11	s	METAL, CHIP 12K 5% 1/16W
R438	1-217-671-11	s	METAL, CHIP 1 5% 1/10W
R439	1-217-671-11	s	METAL, CHIP 1 5% 1/10W

(SV-213 BOARD)

Ref. No. or Q'ty	Part No.	SP	Description
R440	1-217-671-11	s	METAL, CHIP 1 5% 1/10W
R441	1-217-671-11	s	METAL, CHIP 1 5% 1/10W
R442	1-217-671-11	s	METAL, CHIP 1 5% 1/10W
R443	1-217-671-11	s	METAL, CHIP 1 5% 1/10W
R444	1-217-671-11	s	METAL, CHIP 1 5% 1/10W
R445	1-217-671-11	s	METAL, CHIP 1 5% 1/10W
R501	1-216-833-91	s	METAL, CHIP 10K 5% 1/16W
R502	1-216-849-11	s	METAL, CHIP 220K 5% 1/16W
R503	1-216-849-11	s	METAL, CHIP 220K 5% 1/16W
R504	1-216-825-11	s	METAL, CHIP 2.2K 5% 1/16W
R505	1-216-849-11	s	METAL, CHIP 220K 5% 1/16W
R513	1-216-809-11	s	METAL, CHIP 100 5% 1/16W
R514	1-216-821-11	s	METAL, CHIP 1K 5% 1/16W
R515	1-216-833-91	s	METAL, CHIP 10K 5% 1/16W
R516	1-216-821-11	s	METAL, CHIP 1K 5% 1/16W
R517	1-216-821-11	s	METAL, CHIP 1K 5% 1/16W
R518	1-216-821-11	s	METAL, CHIP 1K 5% 1/16W
R519	1-216-821-11	s	METAL, CHIP 1K 5% 1/16W
R520	1-216-821-11	s	METAL, CHIP 1K 5% 1/16W
R521	1-216-809-11	s	METAL, CHIP 100 5% 1/16W
R522	1-216-809-11	s	METAL, CHIP 100 5% 1/16W
R523	1-216-809-11	s	METAL, CHIP 100 5% 1/16W
R524	1-216-857-11	s	METAL, CHIP 1M 5% 1/16W
R525	1-216-849-11	s	METAL, CHIP 220K 5% 1/16W
R526	1-216-849-11	s	METAL, CHIP 220K 5% 1/16W
R529	1-216-845-11	s	METAL, CHIP 100K 5% 1/16W
R533	1-216-809-11	s	METAL, CHIP 100 5% 1/16W
R534	1-216-809-11	s	METAL, CHIP 100 5% 1/16W
R535	1-216-845-11	s	METAL, CHIP 100K 5% 1/16W
R536	1-216-821-11	s	METAL, CHIP 1K 5% 1/16W
R537	1-216-821-11	s	METAL, CHIP 1K 5% 1/16W
R540	1-216-849-11	s	METAL, CHIP 220K 5% 1/16W
R541	1-216-809-11	s	METAL, CHIP 100 5% 1/16W
R542	1-216-821-11	s	METAL, CHIP 1K 5% 1/16W
R543	1-216-809-11	s	METAL, CHIP 100 5% 1/16W
R544	1-216-849-11	s	METAL, CHIP 220K 5% 1/16W
R545	1-216-849-11	s	METAL, CHIP 220K 5% 1/16W
R546	1-216-849-11	s	METAL, CHIP 220K 5% 1/16W
R547	1-216-849-11	s	METAL, CHIP 220K 5% 1/16W
R548	1-216-821-11	s	METAL, CHIP 1K 5% 1/16W
R549	1-216-821-11	s	METAL, CHIP 1K 5% 1/16W
R550	1-216-821-11	s	METAL, CHIP 1K 5% 1/16W
R551	1-216-845-11	s	METAL, CHIP 100K 5% 1/16W
R552	1-216-849-11	s	METAL, CHIP 220K 5% 1/16W
R553	1-216-849-11	s	METAL, CHIP 220K 5% 1/16W
R555	1-216-849-11	s	METAL, CHIP 220K 5% 1/16W
R556	1-216-821-11	s	METAL, CHIP 1K 5% 1/16W
R557	1-216-821-11	s	METAL, CHIP 1K 5% 1/16W
R558	1-216-833-91	s	METAL, CHIP 10K 5% 1/16W
R559	1-216-841-11	s	METAL, CHIP 47K 5% 1/16W
R700	1-216-833-91	s	METAL, CHIP 10K 5% 1/16W
R701	1-216-833-91	s	METAL, CHIP 10K 5% 1/16W
R702	1-216-836-11	s	METAL, CHIP 18K 5% 1/16W
R703	1-216-843-11	s	METAL, CHIP 68K 5% 1/16W
R704	1-216-840-11	s	METAL, CHIP 39K 5% 1/16W
R705	1-216-837-11	s	METAL, CHIP 22K 5% 1/16W
R706	1-216-829-11	s	METAL, CHIP 4.7K 5% 1/16W
R707	1-216-817-11	s	METAL, CHIP 470 5% 1/16W
R708	1-216-823-11	s	METAL, CHIP 1.5K 5% 1/16W

(SV-213 BOARD)

Ref. No. or Q'ty	Part No.	SP	Description
R709	1-216-821-11	s	METAL, CHIP 1K 5% 1/16W
R710	1-216-833-91	s	METAL, CHIP 10K 5% 1/16W
R711	1-216-845-11	s	METAL, CHIP 100K 5% 1/16W
R714	1-216-845-11	s	METAL, CHIP 100K 5% 1/16W
R715	1-216-845-11	s	METAL, CHIP 100K 5% 1/16W
R716	1-216-833-91	s	METAL, CHIP 10K 5% 1/16W
R740	1-216-853-11	s	METAL, CHIP 470K 5% 1/16W
R741	1-216-853-11	s	METAL, CHIP 470K 5% 1/16W
R742	1-216-854-11	s	METAL, CHIP 560K 5% 1/16W
R743	1-216-829-11	s	METAL, CHIP 4.7K 5% 1/16W
R744	1-216-841-11	s	METAL, CHIP 47K 5% 1/16W
R745	1-216-833-91	s	METAL, CHIP 10K 5% 1/16W
R746	1-216-839-11	s	METAL, CHIP 33K 5% 1/16W
R747	1-216-836-11	s	METAL, CHIP 18K 5% 1/16W
R748	1-216-843-11	s	METAL, CHIP 68K 5% 1/16W
R749	1-216-840-11	s	METAL, CHIP 39K 5% 1/16W
R750	1-216-837-11	s	METAL, CHIP 22K 5% 1/16W
R751	1-216-829-11	s	METAL, CHIP 4.7K 5% 1/16W
R752	1-216-817-11	s	METAL, CHIP 470 5% 1/16W
R753	1-216-823-11	s	METAL, CHIP 1.5K 5% 1/16W
R754	1-216-821-11	s	METAL, CHIP 1K 5% 1/16W
R759	1-216-845-11	s	METAL, CHIP 100K 5% 1/16W
R760	1-216-845-11	s	METAL, CHIP 100K 5% 1/16W
R761	1-216-833-91	s	METAL, CHIP 10K 5% 1/16W
R762	1-216-864-11	s	METAL, CHIP 0 5% 1/16W
R763	1-216-833-91	s	METAL, CHIP 10K 5% 1/16W
R764	1-216-836-11	s	METAL, CHIP 18K 5% 1/16W
R765	1-216-843-11	s	METAL, CHIP 68K 5% 1/16W
R766	1-216-840-11	s	METAL, CHIP 39K 5% 1/16W
R767	1-216-837-11	s	METAL, CHIP 22K 5% 1/16W
R768	1-216-829-11	s	METAL, CHIP 4.7K 5% 1/16W
R769	1-216-817-11	s	METAL, CHIP 470 5% 1/16W
R770	1-216-823-11	s	METAL, CHIP 1.5K 5% 1/16W
R771	1-216-821-11	s	METAL, CHIP 1K 5% 1/16W
R772	1-216-825-11	s	METAL, CHIP 2.2K 5% 1/16W
R773	1-216-830-11	s	METAL, CHIP 5.6K 5% 1/16W
R774	1-216-837-11	s	METAL, CHIP 22K 5% 1/16W
R775	1-216-845-11	s	METAL, CHIP 100K 5% 1/16W
R776	1-216-845-11	s	METAL, CHIP 100K 5% 1/16W
R777	1-216-845-11	s	METAL, CHIP 100K 5% 1/16W
R778	1-216-833-91	s	METAL, CHIP 10K 5% 1/16W
R801	1-216-849-11	s	METAL, CHIP 220K 5% 1/16W
R802	1-216-809-11	s	METAL, CHIP 100 5% 1/16W
R805	1-218-704-11	s	METAL, CHIP 3.3K 0.50% 1/16W
R806	1-218-692-11	s	METAL, CHIP 1K 0.50% 1/16W
R810	1-218-727-11	s	METAL, CHIP 30K 0.50% 1/16W
R811	1-216-809-11	s	METAL, CHIP 100 5% 1/16W
R812	1-216-809-11	s	METAL, CHIP 100 5% 1/16W
R813	1-216-815-11	s	METAL, CHIP 330 5% 1/16W
R814	1-216-815-11	s	METAL, CHIP 330 5% 1/16W
R818	1-216-851-11	s	METAL, CHIP 330K 5% 1/16W
R820	1-216-845-11	s	METAL, CHIP 100K 5% 1/16W
R822	1-216-851-11	s	METAL, CHIP 330K 5% 1/16W
R824	1-216-845-11	s	METAL, CHIP 100K 5% 1/16W
R901	1-216-841-11	s	METAL, CHIP 47K 5% 1/16W
R902	1-216-833-91	s	METAL, CHIP 10K 5% 1/16W
R903	1-216-841-11	s	METAL, CHIP 47K 5% 1/16W
R904	1-216-833-91	s	METAL, CHIP 10K 5% 1/16W
R905	1-216-833-91	s	METAL, CHIP 10K 5% 1/16W

(SV-213 BOARD)

Ref. No. or Q'ty	Part No.	SP	Description
R906	1-216-853-11	s	METAL, CHIP 470K 5% 1/16W
R907	1-216-825-11	s	METAL, CHIP 2.2K 5% 1/16W
R908	1-216-825-11	s	METAL, CHIP 2.2K 5% 1/16W
R909	1-216-837-11	s	METAL, CHIP 22K 5% 1/16W
R910	1-216-837-11	s	METAL, CHIP 22K 5% 1/16W
R911	1-216-837-11	s	METAL, CHIP 22K 5% 1/16W
R912	1-216-839-11	s	METAL, CHIP 33K 5% 1/16W
R913	1-216-839-11	s	METAL, CHIP 33K 5% 1/16W
R914	1-216-839-11	s	METAL, CHIP 33K 5% 1/16W
R915	1-216-839-11	s	METAL, CHIP 33K 5% 1/16W
R916	1-216-841-11	s	METAL, CHIP 47K 5% 1/16W
R917	1-216-841-11	s	METAL, CHIP 47K 5% 1/16W
R918	1-216-833-91	s	METAL, CHIP 10K 5% 1/16W
R919	1-216-853-11	s	METAL, CHIP 470K 5% 1/16W
R921	1-216-837-11	s	METAL, CHIP 22K 5% 1/16W
R922	1-216-837-11	s	METAL, CHIP 22K 5% 1/16W
R923	1-216-829-11	s	METAL, CHIP 4.7K 5% 1/16W
RB500	1-236-904-11	s	RESISTOR BLOCK, CHIP 1KX4
RB501	1-236-904-11	s	RESISTOR BLOCK, CHIP 1KX4
RB502	1-239-444-11	s	RESUSTIR BLOCK, CHIP 220K
RB503	1-239-444-11	s	RESUSTIR BLOCK, CHIP 220K
RB504	1-236-904-11	s	RESISTOR BLOCK, CHIP 1KX4
RB506	1-239-444-11	s	RESUSTIR BLOCK, CHIP 220K
RB507	1-236-904-11	s	RESISTOR BLOCK, CHIP 1KX4
RB508	1-239-444-11	s	RESUSTIR BLOCK, CHIP 220K
RB510	1-239-444-11	s	RESUSTIR BLOCK, CHIP 220K
RB511	1-236-904-11	s	RESISTOR BLOCK, CHIP 1KX4
RB512	1-236-907-11	s	RESISTOR BLOCK, CHIP 100KX4
RB513	1-236-907-11	s	RESISTOR BLOCK, CHIP 100KX4
RB514	1-236-907-11	s	RESISTOR BLOCK, CHIP 100KX4
RB515	1-236-904-11	s	RESISTOR BLOCK, CHIP 1KX4
RB516	1-236-907-11	s	RESISTOR BLOCK, CHIP 100KX4
RB801	1-239-444-11	s	RESUSTIR BLOCK, CHIP 220K
RB802	1-239-407-11	s	NETWORK RESISTOR (CHIP) 330
RB803	1-236-908-11	s	RESISTOR, NETWORK, CHIP 10k
RB804	1-236-908-11	s	RESISTOR, NETWORK, CHIP 10k
RB805	1-236-908-11	s	RESISTOR, NETWORK, CHIP 10k
RB806	1-236-908-11	s	RESISTOR, NETWORK, CHIP 10k
RB808	1-239-444-11	s	RESUSTIR BLOCK, CHIP 220K
RB810	1-239-446-11	s	NETWORK RESISTOR (CHIP) 330K
RB811	1-236-907-11	s	RESISTOR BLOCK, CHIP 100KX4
S500	1-692-535-11	s	SWITCH, DIP 4-CKT
X500	1-760-655-21	s	VIBRATOR, CRYSTAL

SW-18 BOARD

Ref. No. or Q'ty	Part No.	SP	Description
1pc	A-8322-166-A	o	MOUNTED CIRCUIT BOARD, SW-18
R561	1-216-049-91	s	METAL, CHIP 1K 5% 1/10W
S561	1-554-592-21	s	SWITCH, KEY BOARD
S562	1-554-592-21	s	SWITCH, KEY BOARD
S563	1-554-088-00	s	SWITCH, TACTILE
S564	1-571-642-11	s	SWITCH, TOGGLE
W561	1-958-489-11	o	HARNESS, SUB (SW923)

SW-19 BOARD

Ref. No. or Q'ty	Part No.	SP	Description
1pc	A-8322-177-A	o	MOUNTED CIRCUIT BOARD, SW-19
1pc	3-612-604-01	s	KNOB,VR(AUDIO)
C201	1-163-038-00	s	CERAMIC, CHIP 0.1uF 25V
C202	1-104-851-11	s	TANTALUM, CHIP 10uF 20% 10V
CN201	1-573-537-11	s	CONNECTOR, BB 6P, MALE
R201	1-216-049-91	s	METAL, CHIP 1K 5% 1/10W
R202	1-216-049-91	s	METAL, CHIP 1K 5% 1/10W
R203	1-216-049-91	s	METAL, CHIP 1K 5% 1/10W
R204	1-216-049-91	s	METAL, CHIP 1K 5% 1/10W
RV201	1-223-686-11	s	RES, VAR, CARBON 5K/5K
S201	1-572-471-11	s	SWITCH
S202	1-572-471-11	s	SWITCH
S203	1-570-984-11	s	SWITCH, TOGGLE

SW-929 BOARD

Ref. No. or Q'ty	Part No.	SP	Description
1pc	1-669-104-12	o	PRINTED WIRING BOARD, SW-929
CN101	1-573-290-21	s	PIN, CONNECTOR (1.5MM) (SMD)4P
RV101	1-473-406-11	s	ENCODER, ED JOG

TG-204 BOARD

Ref. No. or Q'ty	Part No.	SP	Description
*1-*11:For DSR-500WS/500WSP			
*1:Serial No. 10001-10080(UC), 30001-30030(J), 40001-40070(CE)			
*2:Serial No. 10081-(UC), 30031-(J), 40071-(CE)			
*3:Serial No. 10001-10560(UC), 32001-30160(J), 40001-40270(CE)			
*4:Serial No. 10561-(UC), 30161-(J), 40271-(CE)			
*5:Serial No. 10001-10850(UC), 30001-30265(J), 40001-40480(CE)			
*6:Serial No. 10851-(UC), 30266-(J), 40481-(CE)			
*7:Serial No. 10001-12000(UC), 30001-32000(J), 40001-40735(CE)			
*8:Serial No. 12001-(UC), 32001-(J), 40736-(CE)			
*9:Serial No. 10001-12000(UC), 30001-32000(J), 40001-42170(CE)			
*10:Serial No. 10001-12510(UC), 30001-32195(J), 40001-43225(CE)			
*11:Serial No. 12511-(UC), 32196-(J), 43226-(CE)			
1pc	A-8322-142-A	o	MOUNTED CIRCUIT BOARD, TG-204
C1	1-104-851-11	s	TANTALUM, CHIP 10uF 20% 10V
C2	1-162-970-11	s	CERAMIC, CHIP 0.01uF 10% 25V
C3	1-162-970-11	s	CERAMIC, CHIP 0.01uF 10% 25V
C4	1-162-970-11	s	CERAMIC, CHIP 0.01uF 10% 25V
C5	1-137-910-11	s	CAPACITOR, TANTALUM ELECT 10MF
C6	1-137-910-11	s	CAPACITOR, TANTALUM ELECT 10MF
C7	1-162-970-11	s	CERAMIC, CHIP 0.01uF 10% 25V
C9	1-162-970-11	s	CERAMIC, CHIP 0.01uF 10% 25V
C10	1-162-970-11	s	CERAMIC, CHIP 0.01uF 10% 25V
C11	1-126-394-11	s	ELECT, CHIP 10uF 20% 16V
C12	1-162-970-11	s	CERAMIC, CHIP 0.01uF 10% 25V
C13	1-162-970-11	s	CERAMIC, CHIP 0.01uF 10% 25V
C14	1-113-682-11	s	TANTALUM, CHIP 33uF 20% 10V
C15 *1	1-126-394-11	s	ELECT, CHIP 10uF 20% 16V
C15 *2	1-113-682-11	s	TANTALUM, CHIP 33uF 20% 10V
C16	1-162-970-11	s	CERAMIC, CHIP 0.01uF 10% 25V
C17	1-162-970-11	s	CERAMIC, CHIP 0.01uF 10% 25V
C18	1-164-156-11	s	CERAMIC, CHIP 0.1uF 25V
C20	1-164-156-11	s	CERAMIC, CHIP 0.1uF 25V
C21	1-164-156-11	s	CERAMIC, CHIP 0.1uF 25V
C22	1-164-156-11	s	CERAMIC, CHIP 0.1uF 25V
C23	1-164-156-11	s	CERAMIC, CHIP 0.1uF 25V
C24	1-126-396-11	s	ELECT, CHIP 47uF 20% 16V
C25	1-113-500-11	s	TANTLUM, CHIP 100uF 20% 10V
C26	1-162-970-11	s	CERAMIC, CHIP 0.01uF 10% 25V
C27	1-126-405-11	s	ELECT, CHIP 10uF 20% 50V
C29	1-162-927-11	s	CERAMIC, CHIP 100PF 5% 50V
C30	1-164-156-11	s	CERAMIC, CHIP 0.1uF 25V
C31	1-104-920-11	s	TANTALUM, CHIP 4.7uF 20% 35V
C32	1-126-400-11	s	ELECT, CHIP 22uF 20% 35V
C33	1-162-970-11	s	CERAMIC, CHIP 0.01uF 10% 25V
C34	1-126-397-11	s	ELECT, CHIP 33uF 20% 25V
C35	1-162-927-11	s	CERAMIC, CHIP 100PF 5% 50V
C36	1-164-156-11	s	CERAMIC, CHIP 0.1uF 25V
C37	1-104-920-11	s	TANTALUM, CHIP 4.7uF 20% 35V
C38	1-126-397-11	s	ELECT, CHIP 33uF 20% 25V
C39	1-162-970-11	s	CERAMIC, CHIP 0.01uF 10% 25V
C40	1-126-395-11	s	ELECT 22uF 20% 16V
C41	1-164-156-11	s	CERAMIC, CHIP 0.1uF 25V
C42	1-104-823-11	s	TANTALUM, CHIP 47uF 20% 16V
C43	1-162-970-11	s	CERAMIC, CHIP 0.01uF 10% 25V
C44	1-162-970-11	s	CERAMIC, CHIP 0.01uF 10% 25V
C45	1-113-500-11	s	TANTALUM 100uF 20% 10V
C46	1-162-970-11	s	CERAMIC, CHIP 0.01uF 10% 25V
C47	1-162-964-11	s	CERAMIC, CHIP 0.001uF 10% 50V
C48	1-162-970-11	s	CERAMIC, CHIP 0.01uF 10% 25V
C49	1-162-970-11	s	CERAMIC, CHIP 0.01uF 10% 25V

(TG-204 BOARD)

Ref. No. or Q'ty	Part No.	SP	Description
C50	1-104-852-11	s	TANTALUM, CHIP 22uF 20% 10V
C51	1-162-970-11	s	CERAMIC, CHIP 0.01uF 10% 25V
C52	1-107-910-11	s	ELECT 100uF 20% 50V
C54	1-162-970-11	s	CERAMIC, CHIP 0.01uF 10% 25V
C55	1-162-970-11	s	CERAMIC, CHIP 0.01uF 10% 25V
C56	1-162-964-11	s	CERAMIC, CHIP 0.001uF 10% 50V
C57	1-162-970-11	s	CERAMIC, CHIP 0.01uF 10% 25V
C58	1-104-852-11	s	TANTALUM, CHIP 22uF 20% 10V
C59 *3	1-162-964-11	s	CERAMIC, CHIP 0.001uF 10% 50V
C59 *4	1-162-970-11	s	CERAMIC, CHIP 0.01uF 10% 50V
C60 *3	1-162-964-11	s	CERAMIC, CHIP 0.001uF 10% 50V
C60 *4	1-162-970-11	s	CERAMIC, CHIP 0.01uF 10% 50V
C61 *3	1-162-964-11	s	CERAMIC, CHIP 0.001uF 10% 50V
C61 *4	1-162-970-11	s	CERAMIC, CHIP 0.01uF 10% 50V
C62	1-162-970-11	s	CERAMIC, CHIP 0.01uF 10% 25V
C63	1-113-987-11	s	TANTALUM, CHIP 4.7uF 20% 25V
C64	1-104-919-11	s	TANTALUM, CHIP 10uF 20% 25V
C65	1-164-156-11	s	CERAMIC, CHIP 0.1uF 25V
C66	1-164-156-11	s	CERAMIC, CHIP 0.1uF 25V
C67	1-164-156-11	s	CERAMIC, CHIP 0.1uF 25V
C68	1-104-823-11	s	TANTALUM, CHIP 47uF 20% 16V
C70	1-135-181-21	s	TANTALUM, CHIP 4.7uF 10% 6.3V
C71	1-135-181-21	s	TANTALUM, CHIP 4.7uF 10% 6.3V
C72	1-107-686-11	s	TANTALUM, CHIP 4.7uF 20% 16V
C73	1-113-682-11	s	TANTALUM, CHIP 33uF 20% 10V
C74	1-107-686-11	s	TANTALUM, CHIP 4.7uF 20% 16V
C76	1-164-156-11	s	CERAMIC, CHIP 0.1uF 25V
C77	1-113-991-11	s	TANTALUM, CHIP 33uF 20% 16V
C78	1-162-970-11	s	CERAMIC, CHIP 0.01uF 10% 25V
C79	1-162-964-11	s	CERAMIC, CHIP 0.001uF 10% 50V
C80	1-164-156-11	s	CERAMIC, CHIP 0.1uF 25V
C81	1-164-156-11	s	CERAMIC, CHIP 0.1uF 25V
C82	1-164-156-11	s	CERAMIC, CHIP 0.1uF 25V
C83	1-113-500-11	s	TANTALUM, CHIP 100uF 20% 10V
C84	1-104-652-11	s	ELECT 470uF 20% 10V
C85	1-128-528-11	s	ELECT 470uF 20% 16V
C86	1-126-400-11	s	ELECT, CHIP 22uF 20% 35V
C87	1-104-823-11	s	TANTALUM, CHIP 47uF 20% 16V
C88 *10	1-162-970-11	s	CERAMIC, CHIP 0.01uF 10% 25V
C88 *11	1-164-156-11	s	CERAMIC, CHIP 0.1uF 25V
C91	1-162-970-11	s	CERAMIC, CHIP 0.01uF 10% 25V
C92	1-104-823-11	s	TANTALUM, CHIP 47uF 20% 16V
C93	1-104-851-11	s	TANTALUM, CHIP 10uF 20% 10V
C97 *7	1-162-917-11	s	CERAMIC, CHIP 15PF 5% 50V
C97 *8	1-211-864-11	s	METAL, CHIP 0 5% 1/16W
C100 *1	1-162-919-11	s	CERAMIC, CHIP 22PF 5% 50V
C100 *2	1-162-915-11	s	CERAMIC, CHIP 10PF 5% 50V
C101 *1	1-162-919-11	s	CERAMIC, CHIP 22PF 5% 50V
C101 *2	1-162-915-11	s	CERAMIC, CHIP 10PF 5% 50V
C102	1-162-919-11	s	CERAMIC, CHIP 22PF 5% 50V
C103	1-162-919-11	s	CERAMIC, CHIP 22PF 5% 50V
C104	1-162-970-11	s	CERAMIC, CHIP 0.01uF 10% 25V
C105	1-162-920-11	s	CERAMIC, CHIP 27PF 5% 50V
C106	1-162-921-11	s	CERAMIC, CHIP 33PF 5% 50V
C110	1-162-919-11	s	CERAMIC, CHIP 22PF 5% 50V
C111	1-162-919-11	s	CERAMIC, CHIP 22PF 5% 50V
C112 *5	1-131-381-00	s	TANTALUM 47uF 10% 10V
C113 *6	1-113-642-11	s	TANTALUM, CHIP 47uF 20% 10V
CN1	1-778-534-11	o	CONNECTOR, FFC (ZIF) 45P

(TG-204 BOARD)

Ref. No. or Q'ty	Part No.	SP	Description
CN2	1-766-383-11	o	PIN, CONNECTOR (1.5MM)(SMD)12P
CN3	1-766-382-11	o	PIN, CONNECTOR 10P
CN4	1-766-383-11	o	PIN, CONNECTOR (1.5MM)(SMD)12P
CN5	1-766-383-11	o	PIN, CONNECTOR (1.5MM)(SMD)12P
CN6	1-766-383-11	o	PIN, CONNECTOR (1.5MM)(SMD)12P
CN7	1-766-383-11	o	PIN, CONNECTOR (1.5MM)(SMD)12P
CN8	1-573-806-21	s	PIN, CONNECTOR (1.5MM) (SMD)6P
CN11	1-568-331-11	s	CONNECTOR, BOARD TO BOARD 10P
CN12 *9	1-568-331-11	s	CONNECTOR, BOARD TO BOARD 10P
CP1	1-767-799-11	s	OSCILLATOR, CRYSTAL (VCO TYPE)
D1	8-719-029-63	s	DIODE RD4.3uH-T1
D2	8-719-029-63	s	DIODE RD4.3uH-T1
D5	8-719-059-51	s	DIODE MA3J142E0LSO
D6	8-719-059-51	s	DIODE MA3J142E0LSO
D7	8-719-059-51	s	DIODE MA3J142E0LSO
D8	8-719-059-51	s	DIODE MA3J142E0LSO
D9	8-719-938-78	s	DIODE SB10-05PCP
D10	8-719-938-78	s	DIODE SB10-05PCP
D11	8-719-059-51	s	DIODE MA3J142E0LSO
D12	8-719-938-78	s	DIODE SB10-05PCP
FB1	1-543-775-11	s	FERRITE 0uH
FB2	1-543-775-11	s	FERRITE 0uH
FB3 *5	1-216-296-91	s	SHORT 0
FB4	1-543-775-11	s	FERRITE 0uH
FB5	1-543-775-11	s	FERRITE 0uH
FB6	1-543-775-11	s	FERRITE 0uH
FB7	1-543-775-11	s	FERRITE 0uH
FB8	1-543-775-11	s	FERRITE 0uH
IC1	8-759-562-42	s	IC CAT24WC08J-TE13
IC2	8-759-083-94	s	IC TC7W74FU
IC3	8-759-148-39	s	IC CXD8095Q
IC5	8-759-669-72	s	IC TL064CPWR
IC6	8-759-669-72	s	IC TL064CPWR
IC7	8-759-234-20	s	IC TC7S08F
IC8	8-759-394-05	s	IC TC7SH08F-TE85R
IC10	8-759-196-96	s	IC TC7SH08FU-TE85R
IC11	8-759-196-96	s	IC TC7SH08FU-TE85R
IC12 *7	8-759-523-79	s	IC TC74VHC02FT(EL)
*8	8-759-659-93	s	IC SN74HC02APWR
IC13	8-759-064-35	s	IC MB88346BPFV-EF
IC14	8-759-172-33	s	IC UPD16502GS(1)
IC15	8-759-172-33	s	IC UPD16502GS(1)
IC16	8-759-172-33	s	IC UPD16502GS(1)
IC17	8-759-058-58	s	IC TC7S04FU(TE85R)
IC18	8-759-271-86	s	IC TC7SH04FU
IC19	8-759-271-86	s	IC TC7SH04FU
IC21	8-759-058-64	s	IC TC7S32FU(TE85R)
IC22	8-759-185-42	s	IC LM4040AIM3-2.5
IC23	8-759-196-96	s	IC TC7SH08FU-TE85R
IC30	8-759-196-96	s	IC TC7SH08FU-TE85R
IC31	8-759-196-97	s	IC TC7SH32FU-TE85R
IC32	8-759-196-96	s	IC TC7SH08FU-TE85R
IC33	8-759-196-96	s	IC TC7SH08FU-TE85R
IC34	8-759-196-96	s	IC TC7SH08FU-TE85R
IC35	8-759-271-86	s	IC TC7SH04FU
IC36	8-759-196-96	s	IC TC7SH08FU-TE85R
IC38	8-759-196-96	s	IC TC7SH08FU-TE85R
IC39	8-759-196-96	s	IC TC7SH08FU-TE85R

(TG-204 BOARD)

Ref. No. or Q'ty	Part No.	SP	Description
IC40	8-759-196-96	s	IC TC7SH08FU-TE85R
L1	1-410-389-31	s	INDUCTOR, CHIP 47uH
L2	1-410-389-31	s	INDUCTOR, CHIP 47uH
L3	1-410-389-31	s	INDUCTOR, CHIP 47uH
L4	1-410-369-11	s	INDUCTOR, CHIP 1uH
L5	1-414-369-11	s	INDUCTOR, CHIP 1uH
L6	1-410-369-11	s	INDUCTOR, CHIP 1uH
L7	1-410-389-31	s	INDUCTOR, CHIP 47uH
L8	1-412-282-41	s	INDUCTOR, CHIP 470UH
L9	1-410-389-31	s	INDUCTOR, CHIP 47uH
L10	1-410-389-31	s	INDUCTOR, CHIP 47uH
L11	1-410-369-11	s	INDUCTOR CHIP 1uH
L12	1-412-955-11	s	INDUCTOR CHIP 22uH
Q1	8-729-101-07	s	TRANSISTOR 2SB798
Q2	8-729-101-07	s	TRANSISTOR 2SB798
Q3	8-729-807-51	s	TRANSISTOR 2SD1623-S
Q4	8-729-101-07	s	TRANSISTOR 2SB798
Q5	8-729-120-28	s	TRANSISTOR 2SC1623-L5L6
Q6	8-729-101-07	s	TRANSISTOR 2SB798
Q7	8-729-120-28	s	TRANSISTOR 2SC1623-L5L6
Q8	8-729-101-07	s	TRANSISTOR 2SB798
Q9	8-729-120-28	s	TRANSISTOR 2SC1623-L5L6
Q10	8-729-216-22	s	TRANSISTOR 2SA1162
Q11	8-729-216-22	s	TRANSISTOR 2SA1162
Q12	8-729-120-28	s	TRANSISTOR 2SC1623-L5L6
Q13	8-729-120-28	s	TRANSISTOR 2SC1623-L5L6
R1	1-216-827-11	s	METAL, CHIP 3.3K 5% 1/16W
R2	1-216-821-11	s	METAL, CHIP 1K 5% 1/16W
R3	1-216-839-11	s	METAL, CHIP 33K 5% 1/16W
R4	1-216-845-11	s	METAL, CHIP 100K 5% 1/16W
R5	1-216-797-11	s	METAL, CHIP 10 5% 1/16W
R6	1-216-813-11	s	METAL, CHIP 220 5% 1/16W
R7	1-216-797-11	s	METAL, CHIP 10 5% 1/16W
R8	1-218-847-11	s	METAL, CHIP 1K 0.50% 1/16W
R9	1-218-847-11	s	METAL, CHIP 1K 0.50% 1/16W
R10	1-216-809-11	s	METAL, CHIP 100 5% 1/16W
R11	1-216-809-11	s	METAL, CHIP 100 5% 1/16W
R12	1-218-838-11	s	METAL, CHIP 430 0.50% 1/16W
R13	1-218-838-11	s	METAL, CHIP 430 0.50% 1/16W
R14	1-218-838-11	s	METAL, CHIP 430 0.50% 1/16W
R15	1-218-831-11	s	METAL, CHIP 220 0.50% 1/16W
R16	1-218-831-11	s	METAL, CHIP 220 0.50% 1/16W
R17	1-218-831-11	s	METAL, CHIP 220 0.50% 1/16W
R19	1-216-821-11	s	METAL, CHIP 1K 5% 1/16W
R20	1-216-821-11	s	METAL, CHIP 1K 5% 1/16W
R21	1-216-821-11	s	METAL, CHIP 1K 5% 1/16W
R22	1-216-821-11	s	METAL, CHIP 1K 5% 1/16W
R23	1-218-875-11	s	METAL, CHIP 15K 0.50% 1/16W
R24	1-218-876-11	s	METAL, CHIP 16K 0.50% 1/16W
R25	1-218-887-11	s	METAL, CHIP 47K 0.50% 1/16W
R26	1-218-877-11	s	METAL, CHIP 18K 0.50% 1/16W
R27	1-218-881-11	s	METAL, CHIP 27K 0.50% 1/16W
R28	1-218-879-11	s	METAL, CHIP 22K 0.50% 1/16W
R29	1-218-891-11	s	METAL, CHIP 68K 0.50% 1/16W
R30	1-216-825-11	s	METAL, CHIP 2.2K 5% 1/16W
R31	1-216-827-11	s	METAL, CHIP 3.3K 5% 1/16W
R32	1-216-821-11	s	METAL, CHIP 1K 5% 1/16W

(TG-204 BOARD)

Ref. No. or Q'ty	Part No.	SP	Description
R33	1-216-821-11	s	METAL, CHIP 1K 5% 1/16W
R34	1-218-896-11	s	METAL, CHIP 110K 0.50% 1/16W
R35	1-218-871-11	s	METAL, CHIP 10K 0.50% 1/16W
R36	1-216-821-11	s	METAL, CHIP 1K 5% 1/16W
R37	1-216-827-11	s	METAL, CHIP 3.3K 5% 1/16W
R38	1-216-821-11	s	METAL, CHIP 1K 5% 1/16W
R39	1-216-821-11	s	METAL, CHIP 1K 5% 1/16W
R40	1-218-896-11	s	METAL, CHIP 110K 0.50% 1/16W
R41	1-218-879-11	s	METAL, CHIP 22K 0.50% 1/16W
R42	1-216-821-11	s	METAL, CHIP 1K 5% 1/16W
R43	1-216-821-11	s	METAL, CHIP 1K 5% 1/16W
R44	1-216-821-11	s	METAL, CHIP 1K 5% 1/16W
R45	1-218-883-11	s	METAL, CHIP 33K 0.50% 1/16W
R46	1-218-843-11	s	METAL, CHIP 680 0.50% 1/16W
R47	1-218-880-11	s	METAL, CHIP 24K 0.50% 1/16W
R48	1-216-845-11	s	METAL, CHIP 100K 5% 1/16W
R50	1-218-838-11	s	METAL, CHIP 430 0.50% 1/16W
R52	1-216-845-11	s	METAL, CHIP 100K 5% 1/16W
R53	1-216-797-11	s	METAL, CHIP 10 5% 1/16W
R54	1-216-797-11	s	METAL, CHIP 10 5% 1/16W
R55	1-414-748-11	s	FERRITE 0uH
R56	1-216-845-11	s	METAL, CHIP 100K 5% 1/16W
R57	1-216-825-11	s	METAL, CHIP 2.2K 5% 1/16W
R58	1-216-833-91	s	METAL, CHIP 10K 5% 1/16W
R59	1-216-833-91	s	METAL, CHIP 10K 5% 1/16W
R60	1-216-799-11	s	METAL, CHIP 15 5% 1/16W
R61	1-216-799-11	s	METAL, CHIP 15 5% 1/16W
R62	1-216-801-11	s	METAL, CHIP 22 5% 1/16W
R63	1-216-857-11	s	METAL, CHIP 1M 5% 1/16W
R64	1-216-857-11	s	METAL, CHIP 1M 5% 1/16W
R65	1-216-857-11	s	METAL, CHIP 1M 5% 1/16W
R66	1-216-830-11	s	METAL, CHIP 5.6K 5% 1/16W
R67	1-216-846-11	s	METAL, CHIP 120K 5% 1/16W
R68	1-218-851-11	s	METAL, CHIP 1.5K 0.50% 1/16W
R71	1-218-660-11	s	METAL, CHIP 47 0.50% 1/16W
R72	1-211-969-11	s	METAL, CHIP 10 0.50% 1/16W
R73	1-216-797-11	s	METAL, CHIP 10 5% 1/16W
R74	1-216-805-11	s	METAL, CHIP 47 5% 1/16W
R75	1-216-857-11	s	METAL, CHIP 1M 5% 1/16W
R76	1-216-857-11	s	METAL, CHIP 1M 5% 1/16W
R77	1-216-803-11	s	METAL, CHIP 33 5% 1/16W
R79	1-216-864-11	s	METAL, CHIP 0 5% 1/16W
R80	1-414-748-11	s	FERRITE 0uH
R81	1-414-748-11	s	FERRITE 0uH
R82	1-216-864-11	s	METAL, CHIP 0 5% 1/16W
R83	1-218-881-11	s	METAL, CHIP 27K 0.50% 1/16W
R84	1-211-969-11	s	METAL, CHIP 10 0.50% 1/16W
R85	1-211-969-11	s	METAL, CHIP 10 0.50% 1/16W
R87	1-216-821-11	s	METAL, CHIP 1K 5% 1/16W
R88	1-216-821-11	s	METAL, CHIP 1K 5% 1/16W
R89	1-216-864-11	s	METAL, CHIP 0 5% 1/16W
R90	1-216-864-11	s	METAL, CHIP 0 5% 1/16W
R93	1-216-809-11	s	METAL, CHIP 100 5% 1/16W
R94	1-216-821-11	s	METAL, CHIP 1K 5% 1/16W
R95	1-216-821-11	s	METAL, CHIP 1K 5% 1/16W
R96	1-216-821-11	s	METAL, CHIP 1K 5% 1/16W
R97	1-216-821-11	s	METAL, CHIP 1K 5% 1/16W
R98	1-216-821-11	s	METAL, CHIP 1K 5% 1/16W
R99	1-216-845-11	s	METAL, CHIP 100K 5% 1/16W

(TG-204 BOARD)

Ref. No. or Q'ty	Part No.	SP	Description
R100	1-216-845-11	s	METAL, CHIP 100K 5% 1/16W
R101	1-216-845-11	s	METAL, CHIP 100K 5% 1/16W
R102	1-216-821-11	s	METAL, CHIP 1K 5% 1/16W
R103	1-216-809-11	s	METAL, CHIP 100 5% 1/16W
*7 R105	1-216-801-11	s	METAL, CHIP 22 5% 1/16W
R110	1-216-815-11	s	METAL, CHIP 330 5% 1/16W
R111	1-216-815-11	s	METAL, CHIP 330 5% 1/16W
*7 R112	1-216-797-11	s	METAL, CHIP 10 5% 1/16W
*7 R113	1-218-830-11	s	METAL, CHIP 200 0.50% 1/16W
*8	1-218-827-11	s	METAL, CHIP 150 0.50% 1/16W
R115	1-218-833-11	s	METAL, CHIP 270 0.50% 1/16W
R116	1-414-748-11	s	FERRITE 0uH
R117	1-414-748-11	s	FERRITE 0uH
R120	1-216-864-11	s	METAL, CHIP 0 5% 1/16W
R121	1-216-864-11	s	METAL, CHIP 0 5% 1/16W
R123	1-216-815-11	s	METAL, CHIP 330 5% 1/16W
R124	1-216-845-11	s	METAL, CHIP 100K 5% 1/16W
R126	1-216-864-11	s	METAL, CHIP 0 5% 1/16W
R127	1-211-985-11	s	METAL, CHIP 47 0.50% 1/16W
R129	1-216-864-11	s	CONDUCTOR, CHIP (1608)
R131	1-414-748-11	s	FERRITE 0uH
R132	1-414-748-11	s	FERRITE 0uH
R133	1-414-748-11	s	FERRITE 0uH
R134	1-414-748-11	s	FERRITE 0uH
*3 R135	1-216-864-11	s	METAL, CHIP 0 5% 1/16W
*4	1-414-748-11	s	FERRITE 0uH
*6 R136	1-218-895-11	s	METAL, CHIP 100K
*6 R137	1-218-895-11	s	METAL, CHIP 100K
*6 R138	1-218-895-11	s	METAL, CHIP 100K
*6 R139	1-216-296-11	s	CHIP 0

VA-190 BOARD

Ref. No. or Q'ty	Part No.	SP	Description
*1,*2:For DSR-500WS/500WSP			
*1:Serial No. 10001-12000(UC), 30001-32000(J), 40001-40735(CE)			
*2:Serial No. 12001-(UC), 32001-(J), 40736-(CE)			
1pc	A-8322-146-A	o	MOUNTED CIRCUIT BOARD, VA-190
C1	1-104-823-11	s	TANTALUM, CHIP 47uF 20% 16V
C2	1-113-682-11	s	TANTALUM, CHIP 33uF 20% 10V
C3	1-113-682-11	s	TANTALUM, CHIP 33uF 20% 10V
C4	1-164-156-11	s	CERAMIC, CHIP 0.1uF 25V
C5	1-164-156-11	s	CERAMIC, CHIP 0.1uF 25V
C6	1-164-156-11	s	CERAMIC, CHIP 0.1uF 25V
C7	1-135-181-21	s	TANTALUM, CHIP 4.7uF 10% 6.3V
C8	1-110-569-11	s	TANTALUM, CHIP 47uF 20% 6.3V
C9	1-104-563-11	s	FILM, CHIP 0.1uF 5% 16V
C10	1-104-563-11	s	FILM, CHIP 0.1uF 5% 16V
C11	1-104-563-11	s	FILM, CHIP 0.1uF 5% 16V
C12	1-164-230-11	s	CERAMIC 220PF 5% 50V
C13	1-164-156-11	s	CERAMIC, CHIP 0.1uF 25V
C14	1-164-156-11	s	CERAMIC, CHIP 0.1uF 25V
C15	1-164-156-11	s	CERAMIC, CHIP 0.1uF 25V
C16	1-164-156-11	s	CERAMIC, CHIP 0.1uF 25V
C17	1-164-156-11	s	CERAMIC, CHIP 0.1uF 25V
C18	1-162-968-11	s	CERAMIC, CHIP 0.0047uF 10% 50V
C19	1-162-968-11	s	CERAMIC, CHIP 0.0047uF 10% 50V
C33	1-113-682-11	s	TANTALUM, CHIP 33uF 20% 10V
C34	1-113-682-11	s	TANTALUM, CHIP 33uF 20% 10V
C35	1-104-852-11	s	TANTALUM, CHIP 22uF 20% 10V
C36	1-104-852-11	s	TANTALUM, CHIP 22uF 20% 10V
C37	1-164-156-11	s	CERAMIC, CHIP 0.1uF 25V
C38	1-164-156-11	s	CERAMIC, CHIP 0.1uF 25V
C39	1-164-156-11	s	CERAMIC, CHIP 0.1uF 25V
C40	1-164-156-11	s	CERAMIC, CHIP 0.1uF 25V
C44	1-104-823-11	s	TANTALUM, CHIP 47uF 20% 16V
C45	1-104-852-11	s	TANTALUM, CHIP 22uF 20% 10V
C46	1-135-208-11	s	TANTALUM, CHIP 1uF 20% 10V
C47	1-164-156-11	s	CERAMIC, CHIP 0.1uF 25V
C48	1-164-156-11	s	CERAMIC, CHIP 0.1uF 25V
C50	1-164-156-11	s	CERAMIC, CHIP 0.1uF 25V
C51	1-164-156-11	s	CERAMIC, CHIP 0.1uF 25V
C52	1-164-156-11	s	CERAMIC, CHIP 0.1uF 25V
C53	1-162-923-11	s	CERAMIC, CHIP 47PF 5% 50V
C54	1-162-923-11	s	CERAMIC, CHIP 47PF 5% 50V
C55	1-162-923-11	s	CERAMIC, CHIP 47PF 5% 50V
C56	1-113-682-11	s	TANTALUM, CHIP 33uF 20% 10V
C57	1-164-156-11	s	CERAMIC, CHIP 0.1uF 25V
C58	1-162-915-11	s	CERAMIC, CHIP 10PF 50V
C59	1-162-915-11	s	CERAMIC, CHIP 10PF 50V
C60	1-162-915-11	s	CERAMIC, CHIP 10PF 50V
C61	1-113-682-11	s	TANTALUM, CHIP 33uF 20% 10V
C62	1-113-500-11	s	TANTALUM 100uF 20% 10V
C63	1-113-500-11	s	TANTALUM 100uF 20% 10V
C101	1-113-682-11	s	TANTALUM, CHIP 33uF 20% 10V
C102	1-113-682-11	s	TANTALUM, CHIP 33uF 20% 10V
C103	1-164-156-11	s	CERAMIC, CHIP 0.1uF 25V
C107	1-164-156-11	s	CERAMIC, CHIP 0.1uF 25V
C108	1-164-156-11	s	CERAMIC, CHIP 0.1uF 25V
C109	1-104-851-11	s	TANTALUM, CHIP 10uF 20% 10V
C110	1-162-916-11	s	CERAMIC, CHIP 12PF 5% 50V
C111	1-164-156-11	s	CERAMIC, CHIP 0.1uF 25V
C113	1-162-907-11	s	CERAMIC, CHIP 2PF 50V

(VA-190 BOARD)

Ref. No. or Q'ty	Part No.	SP	Description
C114	1-162-912-11	s	CERAMIC, CHIP 7PF 50V
C115	1-162-915-11	s	CERAMIC, CHIP 10PF 50V
C116	1-164-156-11	s	CERAMIC, CHIP 0.1uF 25V
C117	1-162-916-11	s	CERAMIC, CHIP 12PF 5% 50V
C118	1-135-181-21	s	TANTALUM, CHIP 4.7uF 10% 6.3V
C119	1-164-156-11	s	CERAMIC, CHIP 0.1uF 25V
C120	1-162-919-11	s	CERAMIC, CHIP 22PF 5% 50V
C121	1-135-181-21	s	TANTALUM, CHIP 4.7uF 10% 6.3V
C122	1-104-851-11	s	TANTALUM, CHIP 10uF 20% 10V
C123	1-164-156-11	s	CERAMIC, CHIP 0.1uF 25V
C124	1-164-156-11	s	CERAMIC, CHIP 0.1uF 25V
C125	1-164-156-11	s	CERAMIC, CHIP 0.1uF 25V
C126	1-164-156-11	s	CERAMIC, CHIP 0.1uF 25V
C127	1-162-919-11	s	CERAMIC, CHIP 22PF 5% 50V
C128	1-135-208-11	s	TANTALUM, CHIP 1uF 20% 10V
C129	1-164-156-11	s	CERAMIC, CHIP 0.1uF 25V
C130	1-104-851-11	s	TANTALUM, CHIP 10uF 20% 10V
C131	1-164-156-11	s	CERAMIC, CHIP 0.1uF 25V
C132	1-135-181-21	s	TANTALUM, CHIP 4.7uF 10% 6.3V
C133	1-164-156-11	s	CERAMIC, CHIP 0.1uF 25V
C134	1-164-156-11	s	CERAMIC, CHIP 0.1uF 25V
C135	1-164-156-11	s	CERAMIC, CHIP 0.1uF 25V
C137	1-117-136-11	s	ELECT 10uF 20% 6.3
C138	1-164-156-11	s	CERAMIC, CHIP 0.1uF 25V
C139	1-162-970-11	s	CERAMIC, CHIP 0.01uF 10% 25V
C140	1-104-851-11	s	TANTALUM, CHIP 10uF 20% 10V
C141	1-162-907-11	s	CERAMIC, CHIP 2PF 50V
C144	1-162-915-11	s	CERAMIC, CHIP 10PF 50V
C145	1-135-181-21	s	TANTALUM, CHIP 4.7uF 10% 6.3V
C146	1-113-991-11	s	TANTALUM, CHIP 33uF 20% 16V
C147	1-135-181-21	s	TANTALUM, CHIP 4.7uF 10% 6.3V
C148	1-135-181-21	s	TANTALUM, CHIP 4.7uF 10% 6.3V
C149	1-117-139-11	s	ELECT 2.2uF 20% 35V
C150	1-135-181-21	s	TANTALUM, CHIP 4.7uF 10% 6.3V
C151	1-135-181-21	s	TANTALUM, CHIP 4.7uF 10% 6.3V
C152	1-117-136-11	s	ELECT 10uF 20% 6.3
C166	1-162-907-11	s	CERAMIC, CHIP 2PF 50V
C168	1-162-915-11	s	CERAMIC, CHIP 10PF 50V
C169	1-162-910-11	s	CERAMIC, CHIP 5PF 50V
C170	1-164-217-11	s	CERAMIC, CHIP 150PF 5% 50V
C172	1-104-851-11	s	TANTALUM, CHIP 10uF 20% 10V
C173	1-162-910-11	s	CERAMIC, CHIP 5PF 50V
C174	1-162-913-11	s	CERAMIC, CHIP 8PF 50V
C175	1-162-919-11	s	CERAMIC, CHIP 22PF 5% 50V
C176	1-162-917-11	s	CERAMIC, CHIP 15PF 5% 50V
C177	1-113-682-11	s	TANTALUM, CHIP 33uF 20% 10V
C178	1-113-682-11	s	TANTALUM, CHIP 33uF 20% 10V
C179	1-162-915-11	s	CERAMIC, CHIP 10PF 50V
C180	1-162-923-11	s	CERAMIC, CHIP 47PF 5% 50V
C181	1-162-927-11	s	CERAMIC, CHIP 100PF 5% 50V
C201	1-113-682-11	s	TANTALUM, CHIP 33uF 20% 10V
C202	1-113-682-11	s	TANTALUM, CHIP 33uF 20% 10V
C203	1-164-156-11	s	CERAMIC, CHIP 0.1uF 25V
C207	1-164-156-11	s	CERAMIC, CHIP 0.1uF 25V
C208	1-164-156-11	s	CERAMIC, CHIP 0.1uF 25V
C209	1-104-851-11	s	TANTALUM, CHIP 10uF 20% 10V
C210	1-162-916-11	s	CERAMIC, CHIP 12PF 5% 50V
C211	1-164-156-11	s	CERAMIC, CHIP 0.1uF 25V
C213	1-162-907-11	s	CERAMIC, CHIP 2PF 50V
C214	1-162-912-11	s	CERAMIC, CHIP 7PF 50V

(VA-190 BOARD)

Ref. No. or Q'ty	Part No.	SP	Description
C215	1-162-915-11	s	CERAMIC, CHIP 10PF 50V
C216	1-164-156-11	s	CERAMIC, CHIP 0.1uF 25V
C217	1-162-916-11	s	CERAMIC, CHIP 12PF 5% 50V
C218	1-135-181-21	s	TANTALUM, CHIP 4.7uF 10% 6.3V
C219	1-164-156-11	s	CERAMIC, CHIP 0.1uF 25V
C220	1-162-919-11	s	CERAMIC, CHIP 22PF 5% 50V
C221	1-135-181-21	s	TANTALUM, CHIP 4.7uF 10% 6.3V
C222	1-104-851-11	s	TANTALUM, CHIP 10uF 20% 10V
C223	1-164-156-11	s	CERAMIC, CHIP 0.1uF 25V
C224	1-164-156-11	s	CERAMIC, CHIP 0.1uF 25V
C225	1-164-156-11	s	CERAMIC, CHIP 0.1uF 25V
C226	1-164-156-11	s	CERAMIC, CHIP 0.1uF 25V
C227	1-162-919-11	s	CERAMIC, CHIP 22PF 5% 50V
C228	1-135-208-11	s	TANTALUM, CHIP 1uF 20% 10V
C229	1-164-156-11	s	CERAMIC, CHIP 0.1uF 25V
C230	1-104-851-11	s	TANTALUM, CHIP 10uF 20% 10V
C231	1-164-156-11	s	CERAMIC, CHIP 0.1uF 25V
C232	1-135-181-21	s	TANTALUM, CHIP 4.7uF 10% 6.3V
C233	1-164-156-11	s	CERAMIC, CHIP 0.1uF 25V
C234	1-164-156-11	s	CERAMIC, CHIP 0.1uF 25V
C235	1-164-156-11	s	CERAMIC, CHIP 0.1uF 25V
C237	1-117-136-11	s	ELECT 10uF 20% 6.3
C238	1-164-156-11	s	CERAMIC, CHIP 0.1uF 25V
C239	1-162-970-11	s	CERAMIC, CHIP 0.01uF 10% 25V
C240	1-104-851-11	s	TANTALUM, CHIP 10uF 20% 10V
C241	1-162-907-11	s	CERAMIC, CHIP 2PF 50V
C244	1-162-915-11	s	CERAMIC, CHIP 10PF 50V
C245	1-135-181-21	s	TANTALUM, CHIP 4.7uF 10% 6.3V
C246	1-113-991-11	s	TANTALUM, CHIP 33uF 20% 16V
C247	1-135-181-21	s	TANTALUM, CHIP 4.7uF 10% 6.3V
C248	1-135-181-21	s	TANTALUM, CHIP 4.7uF 10% 6.3V
C249	1-117-139-11	s	ELECT 2.2uF 20% 35V
C250	1-135-181-21	s	TANTALUM, CHIP 4.7uF 10% 6.3V
C251	1-135-181-21	s	TANTALUM, CHIP 4.7uF 10% 6.3V
C252	1-117-136-11	s	ELECT 10uF 20% 6.3
C266	1-162-907-11	s	CERAMIC, CHIP 2PF 50V
C268	1-162-915-11	s	CERAMIC, CHIP 10PF 50V
C269	1-162-910-11	s	CERAMIC, CHIP 5PF 50V
C270	1-164-217-11	s	CERAMIC, CHIP 150PF 5% 50V
C272	1-104-851-11	s	TANTALUM, CHIP 10uF 20% 10V
C273	1-162-910-11	s	CERAMIC, CHIP 5PF 50V
C274	1-162-913-11	s	CERAMIC, CHIP 8PF 50V
C275	1-162-919-11	s	CERAMIC, CHIP 22PF 5% 50V
C276	1-162-917-11	s	CERAMIC, CHIP 15PF 5% 50V
C277	1-113-682-11	s	TANTALUM, CHIP 33uF 20% 10V
C278	1-113-682-11	s	TANTALUM, CHIP 33uF 20% 10V
C279	1-162-915-11	s	CERAMIC, CHIP 10PF 50V
C280	1-162-923-11	s	CERAMIC, CHIP 47PF 5% 50V
C281	1-162-927-11	s	CERAMIC, CHIP 100PF 5% 50V
C301	1-113-682-11	s	TANTALUM, CHIP 33uF 20% 10V
C302	1-113-682-11	s	TANTALUM, CHIP 33uF 20% 10V
C303	1-164-156-11	s	CERAMIC, CHIP 0.1uF 25V
C307	1-164-156-11	s	CERAMIC, CHIP 0.1uF 25V
C308	1-164-156-11	s	CERAMIC, CHIP 0.1uF 25V
C309	1-104-851-11	s	TANTALUM, CHIP 10uF 20% 10V
C310	1-162-916-11	s	CERAMIC, CHIP 12PF 5% 50V
C311	1-164-156-11	s	CERAMIC, CHIP 0.1uF 25V
C313	1-162-907-11	s	CERAMIC, CHIP 2PF 50V
C314	1-162-912-11	s	CERAMIC, CHIP 7PF 50V
C315	1-162-915-11	s	CERAMIC, CHIP 10PF 50V

(VA-190 BOARD)

Ref. No. or Q'ty	Part No.	SP	Description
C316	1-164-156-11	s	CERAMIC, CHIP 0.1uF 25V
C317	1-162-916-11	s	CERAMIC, CHIP 12PF 5% 50V
C318	1-135-181-21	s	TANTALUM, CHIP 4.7uF 10% 6.3V
C319	1-164-156-11	s	CERAMIC, CHIP 0.1uF 25V
C320	1-162-919-11	s	CERAMIC, CHIP 22PF 5% 50V
C321	1-135-181-21	s	TANTALUM, CHIP 4.7uF 10% 6.3V
C322	1-104-851-11	s	TANTALUM, CHIP 10uF 20% 10V
C323	1-164-156-11	s	CERAMIC, CHIP 0.1uF 25V
C324	1-164-156-11	s	CERAMIC, CHIP 0.1uF 25V
C325	1-164-156-11	s	CERAMIC, CHIP 0.1uF 25V
C326	1-164-156-11	s	CERAMIC, CHIP 0.1uF 25V
C327	1-162-919-11	s	CERAMIC, CHIP 22PF 5% 50V
C328	1-135-208-11	s	TANTALUM, CHIP 1uF 20% 10V
C329	1-164-156-11	s	CERAMIC, CHIP 0.1uF 25V
C330	1-104-851-11	s	TANTALUM, CHIP 10uF 20% 10V
C331	1-164-156-11	s	CERAMIC, CHIP 0.1uF 25V
C332	1-135-181-21	s	TANTALUM, CHIP 4.7uF 10% 6.3V
C333	1-164-156-11	s	CERAMIC, CHIP 0.1uF 25V
C334	1-164-156-11	s	CERAMIC, CHIP 0.1uF 25V
C335	1-164-156-11	s	CERAMIC, CHIP 0.1uF 25V
C337	1-117-136-11	s	ELECT 10uF 20% 6.3
C338	1-164-156-11	s	CERAMIC, CHIP 0.1uF 25V
C339	1-162-970-11	s	CERAMIC, CHIP 0.01uF 10% 25V
C340	1-104-851-11	s	TANTALUM, CHIP 10uF 20% 10V
C341	1-162-907-11	s	CERAMIC, CHIP 2PF 50V
C344	1-162-915-11	s	CERAMIC, CHIP 10PF 50V
C345	1-135-181-21	s	TANTALUM, CHIP 4.7uF 10% 6.3V
C346	1-113-991-11	s	TANTALUM, CHIP 33uF 20% 16V
C347	1-135-181-21	s	TANTALUM, CHIP 4.7uF 10% 6.3V
C348	1-135-181-21	s	TANTALUM, CHIP 4.7uF 10% 6.3V
C349	1-117-139-11	s	ELECT 2.2uF 20% 35V
C350	1-135-181-21	s	TANTALUM, CHIP 4.7uF 10% 6.3V
C351	1-135-181-21	s	TANTALUM, CHIP 4.7uF 10% 6.3V
C352	1-117-136-11	s	ELECT 10uF 20% 6.3
C366	1-162-907-11	s	CERAMIC, CHIP 2PF 50V
C368	1-162-915-11	s	CERAMIC, CHIP 10PF 50V
C369	1-162-910-11	s	CERAMIC, CHIP 5PF 50V
C370	1-164-217-11	s	CERAMIC, CHIP 150PF 5% 50V
C372	1-104-851-11	s	TANTALUM, CHIP 10uF 20% 10V
C373	1-162-910-11	s	CERAMIC, CHIP 5PF 50V
C374	1-162-913-11	s	CERAMIC, CHIP 8PF 50V
C375	1-162-919-11	s	CERAMIC, CHIP 22PF 5% 50V
C376	1-162-917-11	s	CERAMIC, CHIP 15PF 5% 50V
C377	1-113-682-11	s	TANTALUM, CHIP 33uF 20% 10V
C378	1-113-682-11	s	TANTALUM, CHIP 33uF 20% 10V
C379	1-162-915-11	s	CERAMIC, CHIP 10PF 50V
C380	1-162-923-11	s	CERAMIC, CHIP 47PF 5% 50V
C381	1-162-927-11	s	CERAMIC, CHIP 100PF 5% 50V
CN1	1-695-320-31	o	PIN, CONNECTOR (1.5MM)(SMD) 2P
CN2	1-695-320-71	o	PIN, CONNECTOR (1.5MM)(SMD) 2P
CN3	1-695-320-21	o	PIN, CONNECTOR (1.5MM)(SMD) 2P
CN4	1-778-650-11	o	CONNECTOR, FFC (ZIF) 30P
D1	8-719-421-69	s	DIODE MA133
D4	8-719-029-63	s	DIODE RD4.3uH-T1
D5	8-719-029-63	s	DIODE RD4.3uH-T1
D103	8-719-421-71	s	DIODE MA132WA
D104	8-719-421-71	s	DIODE MA132WA
D203	8-719-421-71	s	DIODE MA132WA

(VA-190 BOARD)

Ref. No. or Q'ty	Part No.	SP	Description
D204	8-719-421-71	s	DIODE MA132WA
D303	8-719-421-71	s	DIODE MA132WA
D304	8-719-421-71	s	DIODE MA132WA
FL101	1-402-639-11	s	FILTER, TRAP
FL201	1-402-639-11	s	FILTER, TRAP
FL301	1-402-639-11	s	FILTER, TRAP
IC1	8-759-064-35	s	IC MB88346BPFV-EF
IC2	8-759-064-35	s	IC MB88346BPFV-EF
IC3	8-759-530-05	s	IC TC4053BFT(EL,N)
IC4	8-759-669-72	s	IC TL064CPWR
IC5	8-759-530-05	s	IC TC4053BFT(EL,N)
IC7	8-759-659-74	s	IC SN74HC175APWR
IC9	8-759-058-58	s	IC TC7S04FU(TE85R)
IC10	8-759-659-96	s	IC SN74HC08APWR
IC11	8-759-659-85	s	IC SN74HC32APWR
IC12	8-759-669-45	s	IC TL062CPWR-12
IC15	8-759-669-67	s	IC TL074CPWR-12
IC16	8-759-530-05	s	IC TC4053BFT(EL,N)
IC101	8-759-530-05	s	IC TC4053BFT(EL,N)
IC102	8-759-271-18	s	IC NJM1496V
IC103	8-759-530-05	s	IC TC4053BFT(EL,N)
IC105	8-759-271-18	s	IC NJM1496V
IC106	8-759-530-05	s	IC TC4053BFT(EL,N)
IC107	8-759-669-72	s	IC TL064CPWR
IC201	8-759-530-05	s	IC TC4053BFT(EL,N)
IC202	8-759-271-18	s	IC NJM1496V
IC203	8-759-530-05	s	IC TC4053BFT(EL,N)
IC205	8-759-271-18	s	IC NJM1496V
IC206	8-759-530-05	s	IC TC4053BFT(EL,N)
IC207	8-759-669-72	s	IC TL064CPWR
IC301	8-759-530-05	s	IC TC4053BFT(EL,N)
IC302	8-759-271-18	s	IC NJM1496V
IC303	8-759-530-05	s	IC TC4053BFT(EL,N)
IC305	8-759-271-18	s	IC NJM1496V
IC306	8-759-530-05	s	IC TC4053BFT(EL,N)
IC307	8-759-669-72	s	IC TL064CPWR
IC309	8-759-185-42	s	IC LM4040AIM3-2.5
L101	1-412-957-11	s	INDUCTOR 33uH
L102	1-412-961-11	s	INDUCTOR 68uH
L201	1-412-957-11	s	INDUCTOR 33uH
L202	1-412-961-11	s	INDUCTOR 68uH
L301	1-412-957-11	s	INDUCTOR 33uH
L302	1-412-961-11	s	INDUCTOR 68uH
Q1	8-729-402-84	s	TRANSISTOR XN4601
Q2	8-729-420-20	s	TRANSISTOR XN4312
Q3	8-729-402-19	s	TRANSISTOR XN6501
Q6	8-729-101-07	s	TRANSISTOR 2SB798
Q7	8-729-807-51	s	TRANSISTOR 2SD1623-S
Q9	8-729-101-07	s	TRANSISTOR 2SB798
Q101	8-729-402-78	s	TRANSISTOR XN6401
Q102	8-729-402-19	s	TRANSISTOR XN6501
Q103	8-729-117-72	s	TRANSISTOR 2SC4178
Q104	8-729-142-90	s	TRANSISTOR 2SK853-K5
Q105	8-729-143-07	s	TRANSISTOR 2SA1610-YY33
Q106	8-729-026-53	s	TRANSISTOR 2SA1576A-T106-QR
Q107	8-729-143-07	s	TRANSISTOR 2SA1610-YY33
Q108	8-729-117-72	s	TRANSISTOR 2SC4178

(VA-190 BOARD)

Ref. No. or Q'ty	Part No.	SP	Description
Q109	8-729-143-07	s	TRANSISTOR 2SA1610-YY33
Q110	8-729-026-53	s	TRANSISTOR 2SA1576A-T106-QR
Q111	8-729-143-07	s	TRANSISTOR 2SA1610-YY33
Q112	8-729-143-07	s	TRANSISTOR 2SA1610-YY33
Q113	8-729-026-53	s	TRANSISTOR 2SA1576A-T106-QR
Q114	8-729-143-07	s	TRANSISTOR 2SA1610-YY33
Q115	8-729-117-72	s	TRANSISTOR 2SC4178
Q116	8-729-905-35	s	TRANSISTOR 2SC4081-R
Q117	8-729-403-29	s	TRANSISTOR XN6435
Q118	8-729-403-32	s	TRANSISTOR XN6534
Q119	8-729-143-07	s	TRANSISTOR 2SA1610-YY33
Q120	8-729-402-19	s	TRANSISTOR XN6501
Q121	8-729-402-78	s	TRANSISTOR XN6401
Q122	8-729-905-35	s	TRANSISTOR 2SC4081-R
Q123	8-729-905-35	s	TRANSISTOR 2SC4081-R
Q124	8-729-905-35	s	TRANSISTOR 2SC4081-R
Q201	8-729-402-78	s	TRANSISTOR XN6401
Q202	8-729-402-19	s	TRANSISTOR XN6501
Q203	8-729-117-72	s	TRANSISTOR 2SC4178
Q204	8-729-142-90	s	TRANSISTOR 2SK853-K5
Q205	8-729-143-07	s	TRANSISTOR 2SA1610-YY33
Q206	8-729-026-53	s	TRANSISTOR 2SA1576A-T106-QR
Q207	8-729-143-07	s	TRANSISTOR 2SA1610-YY33
Q208	8-729-117-72	s	TRANSISTOR 2SC4178
Q209	8-729-143-07	s	TRANSISTOR 2SA1610-YY33
Q210	8-729-026-53	s	TRANSISTOR 2SA1576A-T106-QR
Q211	8-729-143-07	s	TRANSISTOR 2SA1610-YY33
Q212	8-729-143-07	s	TRANSISTOR 2SA1610-YY33
Q213	8-729-026-53	s	TRANSISTOR 2SA1576A-T106-QR
Q214	8-729-143-07	s	TRANSISTOR 2SA1610-YY33
Q215	8-729-117-72	s	TRANSISTOR 2SC4178
Q216	8-729-905-35	s	TRANSISTOR 2SC4081-R
Q217	8-729-403-29	s	TRANSISTOR XN6435
Q218	8-729-403-32	s	TRANSISTOR XN6534
Q219	8-729-143-07	s	TRANSISTOR 2SA1610-YY33
Q220	8-729-402-19	s	TRANSISTOR XN6501
Q221	8-729-402-78	s	TRANSISTOR XN6401
Q222	8-729-905-35	s	TRANSISTOR 2SC4081-R
Q223	8-729-905-35	s	TRANSISTOR 2SC4081-R
Q224	8-729-905-35	s	TRANSISTOR 2SC4081-R
Q301	8-729-402-78	s	TRANSISTOR XN6401
Q302	8-729-402-19	s	TRANSISTOR XN6501
Q303	8-729-117-72	s	TRANSISTOR 2SC4178
Q304	8-729-142-90	s	TRANSISTOR 2SK853-K5
Q305	8-729-143-07	s	TRANSISTOR 2SA1610-YY33
Q306	8-729-026-53	s	TRANSISTOR 2SA1576A-T106-QR
Q307	8-729-143-07	s	TRANSISTOR 2SA1610-YY33
Q308	8-729-117-72	s	TRANSISTOR 2SC4178
Q309	8-729-143-07	s	TRANSISTOR 2SA1610-YY33
Q310	8-729-026-53	s	TRANSISTOR 2SA1576A-T106-QR
Q311	8-729-143-07	s	TRANSISTOR 2SA1610-YY33
Q312	8-729-143-07	s	TRANSISTOR 2SA1610-YY33
Q313	8-729-026-53	s	TRANSISTOR 2SA1576A-T106-QR
Q314	8-729-143-07	s	TRANSISTOR 2SA1610-YY33
Q315	8-729-117-72	s	TRANSISTOR 2SC4178
Q316	8-729-905-35	s	TRANSISTOR 2SC4081-R
Q317	8-729-403-29	s	TRANSISTOR XN6435
Q318	8-729-403-32	s	TRANSISTOR XN6534
Q319	8-729-143-07	s	TRANSISTOR 2SA1610-YY33

(VA-190 BOARD)

Ref. No. or Q'ty	Part No.	SP	Description
Q320	8-729-402-19	s	TRANSISTOR XN6501
Q321	8-729-402-78	s	TRANSISTOR XN6401
Q322	8-729-905-35	s	TRANSISTOR 2SC4081-R
Q323	8-729-905-35	s	TRANSISTOR 2SC4081-R
Q324	8-729-905-35	s	TRANSISTOR 2SC4081-R
R2	1-218-883-11	s	METAL, CHIP 33K 0.50% 1/16W
R3	1-218-883-11	s	METAL, CHIP 33K 0.50% 1/16W
R4	1-216-827-11	s	METAL, CHIP 3.3K 5% 1/16W
R5	1-218-894-11	s	METAL, CHIP 91K 0.50% 1/16W
R6	1-218-883-11	s	METAL, CHIP 33K 0.50% 1/16W
R7	1-218-883-11	s	METAL, CHIP 33K 0.50% 1/16W
R8	1-218-887-11	s	METAL, CHIP 47K 0.50% 1/16W
R9	1-218-875-11	s	METAL, CHIP 15K 0.50% 1/16W
R10	1-218-894-11	s	METAL, CHIP 91K 0.50% 1/16W
R11	1-218-883-11	s	METAL, CHIP 33K 0.50% 1/16W
R12	1-218-883-11	s	METAL, CHIP 33K 0.50% 1/16W
R13	1-218-887-11	s	METAL, CHIP 47K 0.50% 1/16W
R14	1-218-875-11	s	METAL, CHIP 15K 0.50% 1/16W
R15	1-218-894-11	s	METAL, CHIP 91K 0.50% 1/16W
R16	1-218-883-11	s	METAL, CHIP 33K 0.50% 1/16W
R17	1-218-883-11	s	METAL, CHIP 33K 0.50% 1/16W
R18	1-218-887-11	s	METAL, CHIP 47K 0.50% 1/16W
R19	1-218-875-11	s	METAL, CHIP 15K 0.50% 1/16W
R21	1-216-821-11	s	METAL, CHIP 1K 5% 1/16W
R22	1-216-845-11	s	METAL, CHIP 100K 5% 1/16W
R23	1-216-821-11	s	METAL, CHIP 1K 5% 1/16W
R24	1-216-821-11	s	METAL, CHIP 1K 5% 1/16W
R25	1-216-845-11	s	METAL, CHIP 100K 5% 1/16W
R26	1-216-821-11	s	METAL, CHIP 1K 5% 1/16W
R27	1-216-821-11	s	METAL, CHIP 1K 5% 1/16W
R28	1-216-821-11	s	METAL, CHIP 1K 5% 1/16W
R29	1-218-862-11	s	METAL, CHIP 4.3K 0.50% 1/16W
R30	1-216-821-11	s	METAL, CHIP 1K 5% 1/16W
R32	1-218-853-11	s	METAL, CHIP 1.8K 0.50% 1/16W
R33	1-218-866-11	s	METAL, CHIP 6.2K 0.50% 1/16W
R34	1-218-883-11	s	METAL, CHIP 33K 0.50% 1/16W
R35	1-216-833-91	s	METAL, CHIP 10K 5% 1/16W
R36	1-216-833-91	s	METAL, CHIP 10K 5% 1/16W
R37	1-216-821-11	s	METAL, CHIP 1K 5% 1/16W
R38	1-216-821-11	s	METAL, CHIP 1K 5% 1/16W
R40	1-216-828-11	s	METAL, CHIP 3.9K 5% 1/16W
R41	1-216-828-11	s	METAL, CHIP 3.9K 5% 1/16W
R42	1-216-857-11	s	METAL, CHIP 1M 5% 1/16W
R43	1-216-857-11	s	METAL, CHIP 1M 5% 1/16W
R58	1-218-885-11	s	METAL, CHIP 39K 0.50% 1/16W
R59	1-218-884-11	s	METAL, CHIP 36K 0.50% 1/16W
R60	1-218-881-11	s	METAL, CHIP 27K 0.50% 1/16W
R61	1-218-863-11	s	METAL, CHIP 4.7K 0.50% 1/16W
R62	1-218-883-11	s	METAL, CHIP 33K 0.50% 1/16W
R63	1-216-823-11	s	METAL, CHIP 1.5K 5% 1/16W
R68	1-218-886-11	s	METAL, CHIP 43K 0.50% 1/16W
R69	1-218-831-11	s	METAL, CHIP 220 0.50% 1/16W
R70	1-218-877-11	s	METAL, CHIP 18K 0.50% 1/16W
R71	1-216-833-91	s	METAL, CHIP 10K 5% 1/16W
R72	1-216-845-11	s	METAL, CHIP 100K 5% 1/16W
R73	1-216-821-11	s	METAL, CHIP 1K 5% 1/16W
R75	1-216-797-11	s	METAL, CHIP 10 5% 1/16W
R76	1-216-797-11	s	METAL, CHIP 10 5% 1/16W
R77	1-216-797-11	s	METAL, CHIP 10 5% 1/16W

(VA-190 BOARD)

Ref. No. or Q'ty	Part No.	SP	Description
R78	1-216-838-11	s	METAL, CHIP 27K 5% 1/16W
R79	1-216-821-11	s	METAL, CHIP 1K 5% 1/16W
R81	1-216-821-11	s	METAL, CHIP 1K 5% 1/16W
R82	1-216-821-11	s	METAL, CHIP 1K 5% 1/16W
R83	1-218-859-11	s	METAL, CHIP 3.3K 0.50% 1/16W
R84	1-218-852-11	s	METAL, CHIP 1.6K 0.50% 1/16W
R85	1-218-857-11	s	METAL, CHIP 2.7K 0.50% 1/16W
R86	1-218-859-11	s	METAL, CHIP 3.3K 0.50% 1/16W
R87	1-218-852-11	s	METAL, CHIP 1.6K 0.50% 1/16W
R88	1-218-848-11	s	METAL, CHIP 1.1K 0.50% 1/16W
R90	1-218-883-11	s	METAL, CHIP 33K 0.50% 1/16W
R91	1-218-887-11	s	METAL, CHIP 47K 0.50% 1/16W
R92	1-216-821-11	s	METAL, CHIP 1K 5% 1/16W
R93	1-216-845-11	s	METAL, CHIP 100K 5% 1/16W
R94	1-216-864-11	s	METAL, CHIP 0 5% 1/16W
R101	1-216-833-91	s	METAL, CHIP 10K 5% 1/16W
R102	1-216-824-11	s	METAL, CHIP 1.8K 5% 1/16W
R103	1-216-841-11	s	METAL, CHIP 47K 5% 1/16W
R104	1-216-839-11	s	METAL, CHIP 33K 5% 1/16W
R105	1-218-846-11	s	METAL, CHIP 910 0.50% 1/16W
R106	1-218-885-11	s	METAL, CHIP 39K 0.50% 1/16W
R107	1-216-829-11	s	METAL, CHIP 4.7K 5% 1/16W
R109	1-216-827-11	s	METAL, CHIP 3.3K 5% 1/16W
R110	1-218-852-11	s	METAL, CHIP 1.6K 0.50% 1/16W
R111	1-218-907-11	s	METAL, CHIP 330K 0.50% 1/16W
R112	1-218-907-11	s	METAL, CHIP 330K 0.50% 1/16W
R113	1-218-867-11	s	METAL, CHIP 6.8K 0.50% 1/16W
R114	1-216-833-91	s	METAL, CHIP 10K 5% 1/16W
R115	1-218-875-11	s	METAL, CHIP 15K 0.50% 1/16W
R116	1-216-857-11	s	METAL, CHIP 1M 5% 1/16W
R117	1-218-856-11	s	METAL, CHIP 2.4K 0.50% 1/16W
R118	1-218-877-11	s	METAL, CHIP 18K 0.50% 1/16W
R119	1-218-829-11	s	METAL, CHIP 180 0.50% 1/16W
R120	1-216-821-11	s	METAL, CHIP 1K 5% 1/16W
R121	1-218-849-11	s	METAL, CHIP 1.2K 0.50% 1/16W
R122	1-216-823-11	s	METAL, CHIP 1.5K 5% 1/16W
R123	1-216-827-11	s	METAL, CHIP 3.3K 5% 1/16W
R125	1-216-833-91	s	METAL, CHIP 10K 5% 1/16W
R126	1-216-837-11	s	METAL, CHIP 22K 5% 1/16W
R127	1-216-825-11	s	METAL, CHIP 2.2K 5% 1/16W
R128	1-218-839-11	s	METAL, CHIP 470 0.50% 1/16W
R129	1-218-839-11	s	METAL, CHIP 470 0.50% 1/16W
R130	1-218-837-11	s	METAL, CHIP 390 0.50% 1/16W
R131	1-216-825-11	s	METAL, CHIP 2.2K 5% 1/16W
R132	1-218-895-11	s	METAL, CHIP 100K 0.50% 1/16W
R133	1-218-857-11	s	METAL, CHIP 2.7K 0.50% 1/16W
R134	1-218-851-11	s	METAL, CHIP 1.5K 0.50% 1/16W
R135	1-218-837-11	s	METAL, CHIP 390 0.50% 1/16W
R136	1-216-833-91	s	METAL, CHIP 10K 5% 1/16W
R137	1-218-870-11	s	METAL, CHIP 9.1K 0.50% 1/16W
R138	1-218-857-11	s	METAL, CHIP 2.7K 0.50% 1/16W
R139	1-216-821-11	s	METAL, CHIP 1K 5% 1/16W
R140	1-216-825-11	s	METAL, CHIP 2.2K 5% 1/16W
R141	1-216-864-11	s	METAL, CHIP 0 5% 1/16W
R142	1-211-984-11	s	METAL, CHIP 43 0.50% 1/16W
R143	1-211-985-11	s	METAL, CHIP 47 0.50% 1/16W
R144	1-218-838-11	s	METAL, CHIP 430 0.50% 1/16W
R145	1-218-838-11	s	METAL, CHIP 430 0.50% 1/16W
R146	1-218-837-11	s	METAL, CHIP 390 0.50% 1/16W
R147	1-218-857-11	s	METAL, CHIP 2.7K 0.50% 1/16W

(VA-190 BOARD)

Ref. No. or Q'ty	Part No.	SP	Description
R148	1-218-849-11	s	METAL, CHIP 1.2K 0.50% 1/16W
R149	1-218-903-11	s	METAL, CHIP 220K 0.50% 1/16W
R150	1-216-833-91	s	METAL, CHIP 10K 5% 1/16W
R154	1-216-839-11	s	METAL, CHIP 33K 5% 1/16W
R155	1-218-855-11	s	METAL, CHIP 2.2K 0.50% 1/16W
R156	1-216-821-11	s	METAL, CHIP 1K 5% 1/16W
R157	1-216-827-11	s	METAL, CHIP 3.3K 5% 1/16W
R158	1-216-829-11	s	METAL, CHIP 4.7K 5% 1/16W
R159	1-218-839-11	s	METAL, CHIP 470 0.50% 1/16W
R160	1-218-839-11	s	METAL, CHIP 470 0.50% 1/16W
R161	1-218-851-11	s	METAL, CHIP 1.5K 0.50% 1/16W
R162	1-218-871-11	s	METAL, CHIP 10K 0.50% 1/16W
R163	1-218-857-11	s	METAL, CHIP 2.7K 0.50% 1/16W
R164	1-218-857-11	s	METAL, CHIP 2.7K 0.50% 1/16W
R165	1-218-837-11	s	METAL, CHIP 390 0.50% 1/16W
R166	1-218-843-11	s	METAL, CHIP 680 0.50% 1/16W
R167	1-218-851-11	s	METAL, CHIP 1.5K 0.50% 1/16W
R168	1-216-824-11	s	METAL, CHIP 1.8K 5% 1/16W
R169	1-216-823-11	s	METAL, CHIP 1.5K 5% 1/16W
R170	1-218-863-11	s	METAL, CHIP 4.7K 0.50% 1/16W
R171	1-218-873-11	s	METAL, CHIP 12K 0.50% 1/16W
R172	1-216-823-11	s	METAL, CHIP 1.5K 5% 1/16W
R173	1-216-809-11	s	METAL, CHIP 100 5% 1/16W
R174	1-216-809-11	s	METAL, CHIP 100 5% 1/16W
R175	1-216-864-11	s	METAL, CHIP 0 5% 1/16W
R176	1-216-829-11	s	METAL, CHIP 4.7K 5% 1/16W
R177	1-218-869-11	s	METAL, CHIP 8.2K 0.50% 1/16W
R178	1-218-876-11	s	METAL, CHIP 16K 0.50% 1/16W
R180	1-218-839-11	s	METAL, CHIP 470 0.50% 1/16W
R181 *1	1-218-843-11	s	METAL, CHIP 680 0.50% 1/16W
*2	1-218-831-11	s	METAL, CHIP 220 0.50% 1/16W
R182	1-216-833-91	s	METAL, CHIP 10K 5% 1/16W
R183	1-216-833-91	s	METAL, CHIP 10K 5% 1/16W
R191	1-216-861-11	s	METAL, CHIP 2.2M 5% 1/16W
R192	1-216-860-11	s	METAL, CHIP 1.8M 5% 1/16W
R194	1-218-907-11	s	METAL, CHIP 330K 0.50% 1/16W
R195	1-218-901-11	s	METAL, CHIP 180K 0.50% 1/16W
R197	1-218-887-11	s	METAL, CHIP 47K 0.50% 1/16W
R198	1-218-865-11	s	METAL, CHIP 5.6K 0.50% 1/16W
R199	1-216-863-11	s	METAL, CHIP 3.3M 5% 1/16W
R201	1-216-833-91	s	METAL, CHIP 10K 5% 1/16W
R202	1-216-824-11	s	METAL, CHIP 1.8K 5% 1/16W
R203	1-216-841-11	s	METAL, CHIP 47K 5% 1/16W
R204	1-216-839-11	s	METAL, CHIP 33K 5% 1/16W
R205	1-218-846-11	s	METAL, CHIP 910 0.50% 1/16W
R206	1-218-885-11	s	METAL, CHIP 39K 0.50% 1/16W
R207	1-216-829-11	s	METAL, CHIP 4.7K 5% 1/16W
R209	1-216-827-11	s	METAL, CHIP 3.3K 5% 1/16W
R210	1-218-852-11	s	METAL, CHIP 1.6K 0.50% 1/16W
R211	1-218-907-11	s	METAL, CHIP 330K 0.50% 1/16W
R212	1-218-907-11	s	METAL, CHIP 330K 0.50% 1/16W
R213	1-218-867-11	s	METAL, CHIP 6.8K 0.50% 1/16W
R214	1-216-833-91	s	METAL, CHIP 10K 5% 1/16W
R215	1-218-875-11	s	METAL, CHIP 15K 0.50% 1/16W
R216	1-216-857-11	s	METAL, CHIP 1M 5% 1/16W
R217	1-218-856-11	s	METAL, CHIP 2.4K 0.50% 1/16W
R218	1-218-877-11	s	METAL, CHIP 18K 0.50% 1/16W
R219	1-218-829-11	s	METAL, CHIP 180 0.50% 1/16W
R220	1-216-821-11	s	METAL, CHIP 1K 5% 1/16W
R221	1-218-849-11	s	METAL, CHIP 1.2K 0.50% 1/16W

(VA-190 BOARD)

Ref. No. or Q'ty	Part No.	SP	Description
R222	1-216-823-11	s	METAL, CHIP 1.5K 5% 1/16W
R223	1-216-827-11	s	METAL, CHIP 3.3K 5% 1/16W
R225	1-216-833-91	s	METAL, CHIP 10K 5% 1/16W
R226	1-216-837-11	s	METAL, CHIP 22K 5% 1/16W
R227	1-216-825-11	s	METAL, CHIP 2.2K 5% 1/16W
R228	1-218-839-11	s	METAL, CHIP 470 0.50% 1/16W
R229	1-218-839-11	s	METAL, CHIP 470 0.50% 1/16W
R230	1-218-837-11	s	METAL, CHIP 390 0.50% 1/16W
R231	1-216-825-11	s	METAL, CHIP 2.2K 5% 1/16W
R232	1-218-895-11	s	METAL, CHIP 100K 0.50% 1/16W
R233	1-218-857-11	s	METAL, CHIP 2.7K 0.50% 1/16W
R234	1-218-851-11	s	METAL, CHIP 1.5K 0.50% 1/16W
R235	1-218-837-11	s	METAL, CHIP 390 0.50% 1/16W
R236	1-216-833-91	s	METAL, CHIP 10K 5% 1/16W
R237	1-218-870-11	s	METAL, CHIP 9.1K 0.50% 1/16W
R238	1-218-857-11	s	METAL, CHIP 2.7K 0.50% 1/16W
R239	1-216-821-11	s	METAL, CHIP 1K 5% 1/16W
R240	1-216-825-11	s	METAL, CHIP 2.2K 5% 1/16W
R241	1-216-864-11	s	METAL, CHIP 0 5% 1/16W
R242	1-211-984-11	s	METAL, CHIP 43 0.50% 1/16W
R243	1-211-985-11	s	METAL, CHIP 47 0.50% 1/16W
R244	1-218-838-11	s	METAL, CHIP 430 0.50% 1/16W
R245	1-218-838-11	s	METAL, CHIP 430 0.50% 1/16W
R246	1-218-837-11	s	METAL, CHIP 390 0.50% 1/16W
R247	1-218-857-11	s	METAL, CHIP 2.7K 0.50% 1/16W
R248	1-218-849-11	s	METAL, CHIP 1.2K 0.50% 1/16W
R249	1-218-903-11	s	METAL, CHIP 220K 0.50% 1/16W
R250	1-216-833-91	s	METAL, CHIP 10K 5% 1/16W
R254	1-216-839-11	s	METAL, CHIP 33K 5% 1/16W
R255	1-218-855-11	s	METAL, CHIP 2.2K 0.50% 1/16W
R256	1-216-821-11	s	METAL, CHIP 1K 5% 1/16W
R257	1-216-827-11	s	METAL, CHIP 3.3K 5% 1/16W
R258	1-216-829-11	s	METAL, CHIP 4.7K 5% 1/16W
R259	1-218-839-11	s	METAL, CHIP 470 0.50% 1/16W
R260	1-218-839-11	s	METAL, CHIP 470 0.50% 1/16W
R261	1-218-851-11	s	METAL, CHIP 1.5K 0.50% 1/16W
R262	1-218-871-11	s	METAL, CHIP 10K 0.50% 1/16W
R263	1-218-857-11	s	METAL, CHIP 2.7K 0.50% 1/16W
R264	1-218-857-11	s	METAL, CHIP 2.7K 0.50% 1/16W
R265	1-218-837-11	s	METAL, CHIP 390 0.50% 1/16W
R266	1-218-843-11	s	METAL, CHIP 680 0.50% 1/16W
R267	1-218-851-11	s	METAL, CHIP 1.5K 0.50% 1/16W
R268	1-216-824-11	s	METAL, CHIP 1.8K 5% 1/16W
R269	1-216-823-11	s	METAL, CHIP 1.5K 5% 1/16W
R270	1-218-863-11	s	METAL, CHIP 4.7K 0.50% 1/16W
R271	1-218-873-11	s	METAL, CHIP 12K 0.50% 1/16W
R272	1-216-823-11	s	METAL, CHIP 1.5K 5% 1/16W
R273	1-216-809-11	s	METAL, CHIP 100 5% 1/16W
R274	1-216-809-11	s	METAL, CHIP 100 5% 1/16W
R275	1-216-864-11	s	METAL, CHIP 0 5% 1/16W
R276	1-216-829-11	s	METAL, CHIP 4.7K 5% 1/16W
R277	1-218-869-11	s	METAL, CHIP 8.2K 0.50% 1/16W
R278	1-218-876-11	s	METAL, CHIP 16K 0.50% 1/16W
R280	1-218-839-11	s	METAL, CHIP 470 0.50% 1/16W
R281 *1	1-218-843-11	s	METAL, CHIP 680 0.50% 1/16W
*2	1-218-831-11	s	METAL, CHIP 220 0.50% 1/16W
R282	1-216-833-91	s	METAL, CHIP 10K 5% 1/16W
R283	1-216-833-91	s	METAL, CHIP 10K 5% 1/16W
R291	1-216-861-11	s	METAL, CHIP 2.2M 5% 1/16W
R292	1-216-860-11	s	METAL, CHIP 1.8M 5% 1/16W

(VA-190 BOARD)

Ref. No. or Q'ty	Part No.	SP	Description
R294	1-218-907-11	s	METAL, CHIP 330K 0.50% 1/16W
R295	1-218-901-11	s	METAL, CHIP 180K 0.50% 1/16W
R297	1-218-887-11	s	METAL, CHIP 47K 0.50% 1/16W
R298	1-218-865-11	s	METAL, CHIP 5.6K 0.50% 1/16W
R299	1-216-863-11	s	METAL, CHIP 3.3M 5% 1/16W
R301	1-216-833-91	s	METAL, CHIP 10K 5% 1/16W
R302	1-216-824-11	s	METAL, CHIP 1.8K 5% 1/16W
R303	1-216-841-11	s	METAL, CHIP 47K 5% 1/16W
R304	1-216-839-11	s	METAL, CHIP 33K 5% 1/16W
R305	1-218-846-11	s	METAL, CHIP 910 0.50% 1/16W
R306	1-218-885-11	s	METAL, CHIP 39K 0.50% 1/16W
R307	1-216-829-11	s	METAL, CHIP 4.7K 5% 1/16W
R309	1-216-827-11	s	METAL, CHIP 3.3K 5% 1/16W
R310	1-218-852-11	s	METAL, CHIP 1.6K 0.50% 1/16W
R311	1-218-907-11	s	METAL, CHIP 330K 0.50% 1/16W
R312	1-218-907-11	s	METAL, CHIP 330K 0.50% 1/16W
R313	1-218-867-11	s	METAL, CHIP 6.8K 0.50% 1/16W
R314	1-216-833-91	s	METAL, CHIP 10K 5% 1/16W
R315	1-218-875-11	s	METAL, CHIP 15K 0.50% 1/16W
R316	1-216-857-11	s	METAL, CHIP 1M 5% 1/16W
R317	1-218-856-11	s	METAL, CHIP 2.4K 0.50% 1/16W
R318	1-218-877-11	s	METAL, CHIP 18K 0.50% 1/16W
R319	1-218-829-11	s	METAL, CHIP 180 0.50% 1/16W
R320	1-216-821-11	s	METAL, CHIP 1K 5% 1/16W
R321	1-218-849-11	s	METAL, CHIP 1.2K 0.50% 1/16W
R322	1-216-823-11	s	METAL, CHIP 1.5K 5% 1/16W
R323	1-216-827-11	s	METAL, CHIP 3.3K 5% 1/16W
R325	1-216-833-91	s	METAL, CHIP 10K 5% 1/16W
R326	1-216-837-11	s	METAL, CHIP 22K 5% 1/16W
R327	1-216-825-11	s	METAL, CHIP 2.2K 5% 1/16W
R328	1-218-839-11	s	METAL, CHIP 470 0.50% 1/16W
R329	1-218-839-11	s	METAL, CHIP 470 0.50% 1/16W
R330	1-218-837-11	s	METAL, CHIP 390 0.50% 1/16W
R331	1-216-825-11	s	METAL, CHIP 2.2K 5% 1/16W
R332	1-218-895-11	s	METAL, CHIP 100K 0.50% 1/16W
R333	1-218-857-11	s	METAL, CHIP 2.7K 0.50% 1/16W
R334	1-218-851-11	s	METAL, CHIP 1.5K 0.50% 1/16W
R335	1-218-837-11	s	METAL, CHIP 390 0.50% 1/16W
R336	1-216-833-91	s	METAL, CHIP 10K 5% 1/16W
R337	1-218-870-11	s	METAL, CHIP 9.1K 0.50% 1/16W
R338	1-218-857-11	s	METAL, CHIP 2.7K 0.50% 1/16W
R339	1-216-821-11	s	METAL, CHIP 1K 5% 1/16W
R340	1-216-825-11	s	METAL, CHIP 2.2K 5% 1/16W
R341	1-216-864-11	s	METAL, CHIP 0 5% 1/16W
R342	1-211-984-11	s	METAL, CHIP 43 0.50% 1/16W
R343	1-211-985-11	s	METAL, CHIP 47 0.50% 1/16W
R344	1-218-838-11	s	METAL, CHIP 430 0.50% 1/16W
R345	1-218-838-11	s	METAL, CHIP 430 0.50% 1/16W
R346	1-218-837-11	s	METAL, CHIP 390 0.50% 1/16W
R347	1-218-857-11	s	METAL, CHIP 2.7K 0.50% 1/16W
R348	1-218-849-11	s	METAL, CHIP 1.2K 0.50% 1/16W
R349	1-218-903-11	s	METAL, CHIP 220K 0.50% 1/16W
R350	1-216-833-91	s	METAL, CHIP 10K 5% 1/16W
R354	1-216-839-11	s	METAL, CHIP 33K 5% 1/16W
R355	1-218-855-11	s	METAL, CHIP 2.2K 0.50% 1/16W
R356	1-216-821-11	s	METAL, CHIP 1K 5% 1/16W
R357	1-216-827-11	s	METAL, CHIP 3.3K 5% 1/16W
R358	1-216-829-11	s	METAL, CHIP 4.7K 5% 1/16W
R359	1-218-839-11	s	METAL, CHIP 470 0.50% 1/16W

(VA-190 BOARD)

Ref. No. or Q'ty	Part No.	SP	Description
R360	1-218-839-11	s	METAL, CHIP 470 0.50% 1/16W
R361	1-218-851-11	s	METAL, CHIP 1.5K 0.50% 1/16W
R362	1-218-871-11	s	METAL, CHIP 10K 0.50% 1/16W
R363	1-218-857-11	s	METAL, CHIP 2.7K 0.50% 1/16W
R364	1-218-857-11	s	METAL, CHIP 2.7K 0.50% 1/16W
R365	1-218-837-11	s	METAL, CHIP 390 0.50% 1/16W
R366	1-218-843-11	s	METAL, CHIP 680 0.50% 1/16W
R367	1-218-851-11	s	METAL, CHIP 1.5K 0.50% 1/16W
R368	1-216-824-11	s	METAL, CHIP 1.8K 5% 1/16W
R369	1-216-823-11	s	METAL, CHIP 1.5K 5% 1/16W
R370	1-218-863-11	s	METAL, CHIP 4.7K 0.50% 1/16W
R371	1-218-873-11	s	METAL, CHIP 12K 0.50% 1/16W
R372	1-216-823-11	s	METAL, CHIP 1.5K 5% 1/16W
R373	1-216-809-11	s	METAL, CHIP 100 5% 1/16W
R374	1-216-809-11	s	METAL, CHIP 100 5% 1/16W
R375	1-216-864-11	s	METAL, CHIP 0 5% 1/16W
R376	1-216-829-11	s	METAL, CHIP 4.7K 5% 1/16W
R377	1-218-869-11	s	METAL, CHIP 8.2K 0.50% 1/16W
R378	1-218-876-11	s	METAL, CHIP 16K 0.50% 1/16W
R380	1-218-839-11	s	METAL, CHIP 470 0.50% 1/16W
R381 *1	1-218-843-11	s	METAL, CHIP 680 0.50% 1/16W
*2	1-218-831-11	s	METAL, CHIP 220 0.50% 1/16W
R382	1-216-833-91	s	METAL, CHIP 10K 5% 1/16W
R383	1-216-833-91	s	METAL, CHIP 10K 5% 1/16W
R391	1-216-861-11	s	METAL, CHIP 2.2M 5% 1/16W
R392	1-216-860-11	s	METAL, CHIP 1.8M 5% 1/16W
R394	1-218-907-11	s	METAL, CHIP 330K 0.50% 1/16W
R395	1-218-901-11	s	METAL, CHIP 180K 0.50% 1/16W
R397	1-218-887-11	s	METAL, CHIP 47K 0.50% 1/16W
R398	1-218-865-11	s	METAL, CHIP 5.6K 0.50% 1/16W
R399	1-216-863-11	s	METAL, CHIP 3.3M 5% 1/16W
R400	1-218-849-11	s	METAL, CHIP 1.2K 0.50% 1/16W
R401	1-218-885-11	s	METAL, CHIP 39K 0.50% 1/16W
R402	1-216-829-11	s	METAL, CHIP 4.7K 5% 1/16W
R403	1-216-821-11	s	METAL, CHIP 1K 5% 1/16W
R404	1-216-833-91	s	METAL, CHIP 10K 5% 1/16W
R405	1-216-809-11	s	METAL, CHIP 100 5% 1/16W
R406	1-218-865-11	s	METAL, CHIP 5.6K 0.50% 1/16W
R407	1-216-833-91	s	METAL, CHIP 10K 5% 1/16W
R500	1-218-849-11	s	METAL, CHIP 1.2K 0.50% 1/16W
R501	1-218-885-11	s	METAL, CHIP 39K 0.50% 1/16W
R502	1-216-829-11	s	METAL, CHIP 4.7K 5% 1/16W
R503	1-216-821-11	s	METAL, CHIP 1K 5% 1/16W
R504	1-216-833-91	s	METAL, CHIP 10K 5% 1/16W
R505	1-216-809-11	s	METAL, CHIP 100 5% 1/16W
R506	1-218-865-11	s	METAL, CHIP 5.6K 0.50% 1/16W
R507	1-216-833-91	s	METAL, CHIP 10K 5% 1/16W
R600	1-218-849-11	s	METAL, CHIP 1.2K 0.50% 1/16W
R601	1-218-885-11	s	METAL, CHIP 39K 0.50% 1/16W
R602	1-216-829-11	s	METAL, CHIP 4.7K 5% 1/16W
R603	1-216-821-11	s	METAL, CHIP 1K 5% 1/16W
R604	1-216-833-91	s	METAL, CHIP 10K 5% 1/16W
R605	1-216-809-11	s	METAL, CHIP 100 5% 1/16W
R606	1-218-865-11	s	METAL, CHIP 5.6K 0.50% 1/16W
R607	1-216-833-91	s	METAL, CHIP 10K 5% 1/16W
R700	1-218-903-11	s	METAL, CHIP 220K 0.50% 1/16W
R701	1-218-833-11	s	METAL, CHIP 270 0.50% 1/16W
R702	1-218-833-11	s	METAL, CHIP 270 0.50% 1/16W
R703	1-218-834-11	s	METAL, CHIP 300 0.50% 1/16W
R704	1-218-834-11	s	METAL, CHIP 300 0.50% 1/16W

(VA-190 BOARD)

Ref. No. or Q'ty	Part No.	SP	Description
R707	1-218-917-11	s	METAL, CHIP 820K 0.50% 1/16W
R800	1-218-903-11	s	METAL, CHIP 220K 0.50% 1/16W
R801	1-218-833-11	s	METAL, CHIP 270 0.50% 1/16W
R802	1-218-833-11	s	METAL, CHIP 270 0.50% 1/16W
R803	1-218-834-11	s	METAL, CHIP 300 0.50% 1/16W
R804	1-218-834-11	s	METAL, CHIP 300 0.50% 1/16W
R807	1-218-917-11	s	METAL, CHIP 820K 0.50% 1/16W
R900	1-218-903-11	s	METAL, CHIP 220K 0.50% 1/16W
R901	1-218-833-11	s	METAL, CHIP 270 0.50% 1/16W
R902	1-218-833-11	s	METAL, CHIP 270 0.50% 1/16W
R903	1-218-834-11	s	METAL, CHIP 300 0.50% 1/16W
R904	1-218-834-11	s	METAL, CHIP 300 0.50% 1/16W
R907	1-218-917-11	s	METAL, CHIP 820K 0.50% 1/16W
RB1	1-236-904-11	s	RESISTOR BLOCK, CHIP 1KX4
RB2	1-236-907-11	s	RESISTOR BLOCK, CHIP 100KX4

VE-44 BOARD

Ref. No. or Q'ty	Part No.	SP	Description
1pc	A-8322-359-A	o	MOUNTED CIRCUIT BOARD, VE-44
C301	1-113-500-11	s	TANTALUM 100uF 20% 10V
C306	1-164-156-11	s	CERAMIC, CHIP 0.1uF 25V
C310	1-164-156-11	s	CERAMIC, CHIP 0.1uF 25V
C311	1-164-156-11	s	CERAMIC, CHIP 0.1uF 25V
C312	1-164-156-11	s	CERAMIC, CHIP 0.1uF 25V
C313	1-164-156-11	s	CERAMIC, CHIP 0.1uF 25V
C314	1-164-156-11	s	CERAMIC, CHIP 0.1uF 25V
C315	1-164-156-11	s	CERAMIC, CHIP 0.1uF 25V
C316	1-164-156-11	s	CERAMIC, CHIP 0.1uF 25V
C317	1-164-156-11	s	CERAMIC, CHIP 0.1uF 25V
C318	1-164-156-11	s	CERAMIC, CHIP 0.1uF 25V
C319	1-164-156-11	s	CERAMIC, CHIP 0.1uF 25V
C320	1-164-156-11	s	CERAMIC, CHIP 0.1uF 25V
C321	1-164-156-11	s	CERAMIC, CHIP 0.1uF 25V
C322	1-164-156-11	s	CERAMIC, CHIP 0.1uF 25V
C323	1-164-156-11	s	CERAMIC, CHIP 0.1uF 25V
C324	1-164-156-11	s	CERAMIC, CHIP 0.1uF 25V
C325	1-164-156-11	s	CERAMIC, CHIP 0.1uF 25V
C326	1-164-156-11	s	CERAMIC, CHIP 0.1uF 25V
C327	1-164-156-11	s	CERAMIC, CHIP 0.1uF 25V
C328	1-164-156-11	s	CERAMIC, CHIP 0.1uF 25V
C329	1-164-156-11	s	CERAMIC, CHIP 0.1uF 25V
C330	1-164-156-11	s	CERAMIC, CHIP 0.1uF 25V
C331	1-164-156-11	s	CERAMIC, CHIP 0.1uF 25V
CN1	1-785-553-21	o	CONNECTOR, BOARD TO BOARD 120P
IC301	8-759-196-93	s	IC TC7SH00FU-TE85R
IC302	8-759-196-96	s	IC TC7SH08FU-TE85R
IC303	8-759-491-46	s	IC TC74VHCT04AFT(EL)
IC305	8-759-524-51	s	IC TC74VHC573FT(EL)
IC306	8-759-524-51	s	IC TC74VHC573FT(EL)
IC307	8-759-523-95	s	IC TC74VHC74FT(EL)
IC308	8-759-524-10	s	IC TC74VHC157FT(EL)
IC309	8-759-524-10	s	IC TC74VHC157FT(EL)
IC310	8-759-524-10	s	IC TC74VHC157FT(EL)
IC311	8-759-524-10	s	IC TC74VHC157FT(EL)
IC312	8-759-523-96	s	IC TC74VHC86FT(EL)
IC313	8-759-524-51	s	IC TC74VHC573FT(EL)
IC314	8-759-524-51	s	IC TC74VHC573FT(EL)
IC315	8-759-524-51	s	IC TC74VHC573FT(EL)
IC316	8-759-524-51	s	IC TC74VHC573FT(EL)
IC317	8-759-524-51	s	IC TC74VHC573FT(EL)
IC318	8-752-360-44	s	IC CXK1203AR-T4
IC319	8-752-360-44	s	IC CXK1203AR-T4
IC320	8-752-360-44	s	IC CXK1203AR-T4
IC321	8-752-360-44	s	IC CXK1203AR-T4
IC322	8-752-360-44	s	IC CXK1203AR-T4
IC323	8-752-360-44	s	IC CXK1203AR-T4
IC324	8-752-360-44	s	IC CXK1203AR-T4
IC325	8-752-360-44	s	IC CXK1203AR-T4
IC326	8-759-421-88	s	IC SN74LVC821APW-E05
IC327	8-759-421-88	s	IC SN74LVC821APW-E05
IC328	8-759-421-88	s	IC SN74LVC821APW-E05
IC329	8-759-421-88	s	IC SN74LVC821APW-E05
IC330	8-752-360-44	s	IC CXK1203AR-T4
IC331	8-752-360-44	s	IC CXK1203AR-T4

(VE-44 BOARD)

Ref. No. or Q'ty	Part No.	SP	Description
IC332	8-759-421-88	s	IC SN74LVC821APW-E05
IC333	8-752-360-44	s	IC CXK1203AR-T4
IC334	8-752-360-44	s	IC CXK1203AR-T4
IC335	8-759-421-88	s	IC SN74LVC821APW-E05
IC336	8-759-196-96	s	IC TC7SH08FU-TE85R
R302	1-216-864-11	s	METAL, CHIP 0 5% 1/16W
R304	1-216-864-11	s	METAL, CHIP 0 5% 1/16W
R305	1-216-864-11	s	METAL, CHIP 0 5% 1/16W
R306	1-216-864-11	s	METAL, CHIP 0 5% 1/16W
R307	1-216-809-11	s	METAL, CHIP 100 5% 1/16W
R308	1-216-864-11	s	METAL, CHIP 0 5% 1/16W
R311	1-216-864-11	s	METAL, CHIP 0 5% 1/16W
R312	1-216-864-11	s	METAL, CHIP 0 5% 1/16W
R313	1-216-805-11	s	METAL, CHIP 47 5% 1/16W
R321	1-216-805-11	s	METAL, CHIP 47 5% 1/16W
RB301	1-239-409-11	s	RESISTOR BLOCK, CHIP 47X4
RB302	1-239-409-11	s	RESISTOR BLOCK, CHIP 47X4
RB303	1-239-409-11	s	RESISTOR BLOCK, CHIP 47X4
RB304	1-239-409-11	s	RESISTOR BLOCK, CHIP 47X4
RB305	1-239-409-11	s	RESISTOR BLOCK, CHIP 47X4
RB306	1-239-409-11	s	RESISTOR BLOCK, CHIP 47X4
RB307	1-239-409-11	s	RESISTOR BLOCK, CHIP 47X4
RB308	1-239-409-11	s	RESISTOR BLOCK, CHIP 47X4
RB309	1-239-409-11	s	RESISTOR BLOCK, CHIP 47X4
RB310	1-239-409-11	s	RESISTOR BLOCK, CHIP 47X4

FRAME
---

*a: [Lot No. 1C1 -]
*P: [DSR-570WSP/500WSP]

Ref. No. or Q'ty	Part No.	SP	Description
1pc	1-528-174-31	s	BATTERY,LITHIUM CR2032
HN101	1-783-283-13	s	CABLE, FLEXIBLE FLAT (50-CORE) [CN14/MB board to CN504/AA board]
HN102			
(CN506/AA board)			
	1-565-978-11	o	HOUSING, CONNCETOR 6P
6pcs	1-565-977-11	s	CONTACT, FEMALE AWG#28-32
(CN701/LE board)			
	1-565-978-11	o	HOUSING, CONNCETOR 6P
6pcs	1-565-977-11	s	CONTACT, FEMALE AWG#28-32
HN103			
(CN503/AT board)			
	1-565-978-11	o	HOUSING, CONNCETOR 6P
6pcs	1-565-977-11	s	CONTACT, FEMALE AWG#28-32
(CN1/SE-511 board)			
	1-565-978-11	o	HOUSING, CONNCETOR 6P
6pcs	1-565-977-11	s	CONTACT, FEMALE AWG#28-32
HN104	1-790-768-11	s	CABLE, FLEXIBLE FLAT (45-CORE) [CN15/MB board to CN1/TG board]
HN105	1-783-288-13	s	CABLE, FLEXIBLE FLAT (30-CORE) [CN5/MB board to CN4/VA board]
HN106	1-783-285-13	s	CABLE, FLEXIBLE FLAT (50-CORE) [CN16/MB board to CN306/PSW board]
HN107			
(CN305/PSW board)			
	1-695-892-11	o	HOUSING,CONNECTOR 12P
12pcs	1-695-215-11	o	CONTACT, FEMALE
(W401/CN-1864 board)			
	1-695-892-11	o	HOUSING,CONNECTOR 12P
12pcs	1-695-215-11	o	CONTACT, FEMALE
HN108	1-783-282-14	s	CABLE, FLEXIBLE FLAT (50-CORE) [CN3/MB board to CN3/FP-118 board]
HN109	1-783-282-14	s	CABLE, FLEXIBLE FLAT (50-CORE) [CN2/MB board to CN2/FP-118 board]
HN110	1-777-865-13	s	CABLE, FLEXIBLE FLAT (40-CORE) [CN1/MB board to CN1/FP-118 board]
HN111			
(CN5/FP-118 board)			
	1-569-618-11	o	HOUSING, CONNECTOR 3P
3pcs	1-565-977-11	s	CONTACT, FEMALE AWG#28-32
HN112	1-777-902-11	o	WIRE, FLAT TYPE (10-CORE) [CN4/FP-118 board to CN1/KY board]
HN113	1-783-363-11	s	WIRE, FLAT TYPE (10-CORE) [CN8/FP-118 board to CN801/FP-99 board]
HN114	1-958-485-11	o	HARNESS, SUB (SW929) [CN803/FP-99 board to CN101/SW-929 board]
HN115	1-958-499-12	s	HARNESS, SUB (MB-CPS)
(CN3/CP board)			
	1-561-514-00	o	HOUSING,CONNECTOR
2pcs	1-560-372-00	o	CONTACT, FEMALE AWG#22-28
(CN22/MB board)			
	1-562-644-11	s	SOCKET,CONNECTOR 2P
2pcs	1-562-643-11	o	CONTACT, FEMALE AWG#24-30
HN116	1-958-496-11	s	HARNESS, SUB (POWER LINE)
1pc	1-500-111-11	s	CORE
1pc	1-564-603-31	s	CONNECTOR (WITH DC SW) 4P "DC IN"
1pc	1-553-442-21	s	SWITCH, MICRO
(TO CN6/CP board)			
	1-580-582-11	o	HOUSING,CONNECTOR 12P
9pcs	1-573-176-11	o	CONTACT, FEMALE AWG#22-26
1pc	1-580-599-11	o	CONTACT, FEMALE AWG#26-30

(FRAME)

Ref. No. or Q'ty	Part No.	SP	Description
HN117	1-958-497-11	s	HARNESS, SUB (BATTERY)
	1-766-377-12	s	CONNECTOR, BATTERY
(TO CN7/CP board)			
	1-580-581-11	o	HOUSING,CONNECTOR 10P
6pcs	1-573-176-11	o	CONTACT, FEMALE AWG#22-26
3pcs	1-580-599-11	o	CONTACT, FEMALE AWG#26-30
HN118	1-958-498-11	o	HARNESS, SUB (CP-LIGHT)
(CN9/CP board)			
	1-561-516-00	o	HOUSING,CONNECTOR
4pcs	1-560-372-00	o	CONTACT, FEMALE AWG#22-28
(CN901/PS board)			
	1-561-516-00	o	HOUSING,CONNECTOR
4pcs	1-560-372-00	o	CONTACT, FEMALE AWG#22-28
HN119			
(CN2/CN-1823 board)			
	1-569-519-11	o	HOUSING, CONNECTOR 7P
6pcs	1-565-977-11	s	CONTACT, FEMALE AWG#28-32
(CN102/DV board)			
	1-565-978-11	o	HOUSING, CONNCETOR 6P
6pcs	1-565-977-11	s	CONTACT, FEMALE AWG#28-32
HN120	1-777-866-12	s	CABLE, FLEXIBLE FLAT (45-CORE) [CN11/MB board to CN773/RP board]
HN121	1-777-864-11	s	CABLE, FLEXIBLE FLAT (20-CORE) [CN772/RP board to CN501/SV board]
HN122	1-777-867-12	s	CABLE, FLEXIBLE FLAT (50-CORE) [CN10/MB board to CN502/SV board]
HN123	1-958-486-11	o	HARNESS, SUB (DU27) [CN23/MB board to CN1/DU board]
HN124			
(CN2/CN-1874 board)			
	1-561-514-00	o	HOUSING, CONNECTOR 2P
2pcs	1-560-372-00	o	CONTACT, FEMALE AWG#22-28
(VIDEO LIGHT CONNECTOR)			
	1-561-514-00	o	HOUSING, CONNECTOR 2P
2pcs	1-560-372-00	o	CONTACT, FEMALE AWG#22-28
HN125	1-956-511-11	o	HARNESS, SUB (DEF) [VA board to PA board]
HN126 *a*P			
	1-961-628-12	o	HARNESS, SUB (PA187-E1) [CN3/TG board to CN2/PA board]
*a*P			
	1-961-629-12	o	HARNESS, SUB (PA187-E2) [CN2/TG board to CN1/PA board]
HN127 *a*P			
	1-961-629-12	o	HARNESS, SUB (PA187-E2) [TG board to PA board]
HN128 *a*P			
	1-961-629-12	o	HARNESS, SUB (PA187-E2) [CN7/TG board to CN2/PA board]

1-4. Supplied Accessories List

DSR-570WS/570WSP

Ref. No. or Q'ty	Part No.	SP	Description
1pc	1-528-174-31	s	BATTERY,LITHIUM CR2032
1pc	3-206-359-01	o	MANUAL, INSTRUCTION [for J]
1pc	3-206-359-11	o	MANUAL, INSTRUCTION [for CE, UC]
1pc	3-613-311-01	s	CAP,CN
1pc	3-764-889-01	o	CHART,ADJUSTMENT
1pc	A-6772-374-C	s	BELT ASSY, SHOULDER

DSR-500WS/500WSP

Ref. No. or Q'ty	Part No.	SP	Description
*1:Serial No. 10001-12000(UC), 30001-32000(J), 40001-42000(CE)			
*2:Serial No. 12001-(UC), 32001-(J), 42001-(CE)			
1pc	A-6772-374-C	s	BELT ASSY, SHOULDER
1pc	1-528-174-31	s	BATTERY, LITHIUM (CR2032 TYPE)
1pc	3-613-311-01	s	CAP, CN
1pc	3-764-889-01	o	CHART, ADJUSTMENT
1pc *1	3-866-520-02	s	MANUAL, INSTRUCTION (JAPANESE)
*2	3-866-520-03	s	MANUAL, INSTRUCTION (JAPANESE)
1pc *1	3-866-520-12	s	MANUAL, INSTRUCTION (ENGLISH)
*2	3-866-520-13	s	MANUAL, INSTRUCTION (ENGLISH)
1pc *1	3-866-520-22	s	MANUAL, INSTRUCTION (FRENCH)
*2	3-866-520-23	s	MANUAL, INSTRUCTION (FRENCH)
1pc *1	3-866-520-32	s	MANUAL, INSTRUCTION (GERMAN)
*2	3-866-520-33	s	MANUAL, INSTRUCTION (GERMAN)
1pc *1	3-866-520-42	s	MANUAL, INSTRUCTION (ITALIAN)
*2	3-866-520-43	s	MANUAL, INSTRUCTION (ITALIAN)
1pc *1	3-866-520-52	s	MANUAL, INSTRUCTION (CHINESE)
1pc	1-542-296-23	o	MICROPHONE
1pc	3-179-882-01	o	SPACER, MICROPHONE

1-5. Optional Fixtures List

Ref. No. or Q'ty	Part No.	SP	Description
J-6080-029-A	o		SMALL ADJUSTMENT MIRROR
J-6082-231-A	o		WASHER ATTACHING TOOL (for 1.5)
J-6082-232-A	o		WASHER ATTACHING TOOL (for 1.2)
J-6082-233-A	o		WASHER ATTACHING TOOL (for 0.8)
J-6082-234-A	o		WASHER REMOVING TOOL A
J-6082-236-A	o		WASHER ATTACHING/DETACHING KIT
J-6082-362-A	o		TAPE GUIDE ADJUSTING SCREWDRIVER
J-6082-373-A	o		TORQUE CASSETTE
J-6276-320-A	o		EXTENSION BOARD, EX-622
J-6325-110-A	o		TORQUE SCREWDRIVER BIT (for 1.4)
J-6325-380-A	o		TORQUE SCREWDRIVER BIT (for M2)
J-6325-400-A	o		TORQUE SCREWDRIVER (3 kg)
J-6441-740-A	o		EXTENSION BOARD, DJ-174
J-6442-350-A	o		RF EXTENSION BOARD
J-6442-410-A	o		CASSETTE REFERENCE BOARD
J-6442-420-A	o		GUIDE GAUGE
J-6442-430-A	o		REEL TABLE HEIGHT CHECK GAUGE
J-6442-510-A	o		TORQUE GAUGE 90ATG
J-6442-520-A	o		REWINDING TORQUE MEASURING ATTACHMENT
3-184-527-01	o		CLEANING CLOTH
7-432-114-11	o		THREE BOND 1401B
7-651-000-10	o		GREASE SGL-601 (50g)
8-967-999-02	o		ALIGNMENT TAPE, XH2-1AST
8-967-999-21	o		ALIGNMENT TAPE, XH5-1A (for NTSC)
8-967-999-25	o		ALIGNMENT TAPE, XH5-1AP (for PAL)
9-910-573-01	o		CLEANING LIQUID

Section 2
Semiconductor Pin Assignments

The following describes the semiconductor types used in this unit.
For semiconductors marked with page numbers in the index, refer to the corresponding pages in this section. However, in some cases incompatible types are also listed, therefore, when a part is to be replaced, also refer to the Spare Parts section.
In addition, for semiconductors with ID Nos., refer to the separate CD-ROM titled “Semiconductor Pin Assignments” (Sony Part No. 9-968-546-xx) that allows searching for parts by semiconductor type or ID No.
The semiconductors in the manual or on the CD-ROM are listed by equivalent types. Thus the external view or the index mark indication may differ from the actual type.
Pin assignments and block diagrams are based on the IC manufacturer’s data book.

本機に使用されている半導体型名の一覧を下記に示します。
索引中，ページが記載されている半導体は，本章の該当ページを参照してください。ただし，互換性のない型名を併記している場合がありますので，部品を交換するときは，Spare Partsの章を参照してください。
また，ID番号が記載されている半導体は，別途発行の “Semiconductor Pin Assignments” CD−ROM版 (ソニー部品番号：9−968−546−xx)を参照してください。
半導体型名またはID番号から検索ができます。
マニュアルまたはCD−ROMに掲載されている半導体は，それぞれの機能を等価的に表わしたものです。
外観やインデックスマークの表示方法が実物と異なる場合があります。
ピン配置およびブロック図はICメーカーのデータブックに従いました。

DIODE	Page or ID No.
02DZ4.7-TPH3	DC008-04
1SS123-T1	DC001-01
1SS184	DC001-03
1SS226	DC001-01
1SS300-TE85L	DC001-02
1SS301-TE85L	DC001-03
1SS302	DC001-01
1SS302-TE85L	DC001-01
1SS351-TB	DC001-01
1SS355TE-17	DC008-02
1SS376TE-17	DC008-02
DAN202U	DC001-03
DAN202UT106	DC001-03
DAN222	DC001-03
DAN222-TL	DC001-03
DAP202U	DC001-02
DAP202UT106	DC001-02
DAP222	DC001-02
DAP222-TL	DC001-02
EA60QC06-F	DC002-03
EA60QC06-TE16F2	DC002-03
EA60QC06-TE16F2	DC015-01
ERC04-06SU2	DA001-01
ERC04-06SU2	DA004-01
HSM88AS-TL	DC001-01
HSM88WA	DC001-02
HSM88WA-TL	DC001-02
HSM88WK	DC001-03
HSM88WK-TL	DC001-03

DIODE	Page or ID No.
KV1470	DC001-13
KV1470(5MA)	DC001-13
KV1470TL00	DC001-13
MA132WA	DC001-02
MA132WA-TX	DC001-02
MA132WK	DC001-03
MA132WK-TX	DC001-03
MA133	DC001-01
MA133-TX	DC001-01
MA141WK	DC001-03
MA3J142D0LSO	DC001-02
MA3J142DOLSO	DC001-02
MA3J142E0LSO	DC001-03
MA3J14300LSO	DC001-01
MA795-TX	DC001-06
RB051L-40	DC007-01
RB051L-40TE25	DC007-01
RB411D	DC001-06
RB411D(RECTI)	DC001-06
RB411D-T146	DC001-06
RD11M-B1	DC001-04
RD11M-T1B1	DC001-04
RD2.0UH-T1	DC008-04
RD2.4M-B	DC001-04
RD2.4M-T1B	DC001-04
RD4.3UH-T1	DC008-04
RD4.7UH-T1	DC008-04
RD5.6M-B1	DC001-04
RD5.6M-B2	DC001-04
RD5.6M-T1B	DC001-04
RD5.6M-T1B1	DC001-04
RD6.8M-T1B	DC001-04
RD6.8M-T1B(5MA)	DC001-04
RD8.2M-B1	DC001-05

Index

DIODE — **Page or ID No.**

RD8.2M-T1B1 ..... DC001-05
RD9.1UM-T1B2 ..... DC008-04

SB007-03CP DC001-06
SB007-03CP-TB DC001-06
SB007W03C DC001-03
SB007W03C-TB DC001-03
SB01-05CP DC001-06
SB01-05CP(RECTI) DC001-06
SB01-05CP-TB DC001-06
SB05-05CP(RECTI) DC001-06
SB05-05CP-TB DC001-06
SB05W05C DC001-03
SB05W05C-TB DC001-03
SB05W05CP(RECTI) DC001-03
SB10-05PCP DC002-02
SB10-05PCP(RECTI) DC002-02
SB10-05PCP-TD DC002-02
SB10-05PCP-TD DC002-02

U05G DA004-01
U05G(RECTI) DA001-01
UDZS-TE17-5.6B DC008-04
UDZSTE-175.6B DC008-04

LED — **Page or ID No.**

CL-150G-CD LC001-01
CL-150G-CD-T LC001-01
CL-150SD-CD LC001-01
CL-150SD-CD-T LC001-01
CL-150Y-CD LC001-01
CL-150Y-CD-T LC001-01

EBR3368S LR010-02

GL3UR8 ..... LR002-01
GL4600S LA002-02

TRANSISTOR — **Page or ID No.**

2SA1036K-R TC001-01
2SA1036K-T-146-R TC001-01
2SA1037AK-T146-QR TC001-01
2SA1037AK-T146-R TC001-01
2SA1162G TC001-01
2SA1213Y-TE12L TC002-01
2SA1226-E4 ..... TC001-01
2SA1226-T1E3E4 ..... TC001-01
2SA1576A-T106-QR TC001-01
2SA1576A-T106-R TC001-01
2SA1610-T1Y34 ..... TC001-01
2SA1610-Y33 ..... TC001-01
2SA1611-M5M6 ..... TC001-01
2SA1611-M6 ..... TC001-01
2SA1611-T1M6 ..... TC001-01
2SA1611T1-M5M6 ..... TC001-01
2SA812-T1M6 ..... TC001-01
2SB1115A TC002-01
2SB1115A-YQ TC002-01
2SB1132-T101-QR TC002-01
2SB1203S-FA TR031-02
2SB1203S-TL TR031-02
2SB624-BV345 ..... TC001-01
2SB624-BV5 ..... TC001-01
2SB624-T1BV4 ..... TC001-01
2SB624-T1BV5 ..... TC001-01
2SB798 ..... TC002-01
2SB798-DL TC002-01
2SB798-T1-DLDK TC002-01
2SC1009A TC001-02
2SC1009A-FA4 ..... TC001-02
2SC1009A-T1FA4 ..... TC001-02
2SC1623 ..... TC001-02
2SC1623-T1L6 ..... TC001-02
2SC2411K-CR TC001-02
2SC2411K-T-146-CR TC001-02
2SC2713-G TC001-02
2SC2713G-TE85L TC001-02
2SC2873Y-TE12L TC002-02
2SC2873Y-TE12R TC002-02
2SC4081T106R TC001-02
2SC4176-B34 ..... TC001-02
2SC4176-T1B34 ..... TC001-02
2SC4177 ..... TC001-02
2SC4177-L6 ..... TC001-02
2SC4177-T1L5L6 ..... TC001-02
2SC4178 ..... TC001-02
2SC4178-F13 ..... TC001-02
2SC4178-T1F13 ..... TC001-02
2SC4207-YGR-TE85L TC008-11
2SC4207-YGRTE85L TC008-11
2SC4213-AB-TE85L TC001-02
2SC4213-B TC001-02
2SC4213B-TE85L TC001-02
2SD1623-S TC002-02
2SD2216J-R(TX).SO TC001-02
2SD596-DV5 ..... TC001-02
2SD596-T1DV4 ..... TC001-02
2SD596-T1DV5 ..... TC001-02

TRANSISTOR	Page or ID No.
2SD596DV345	TC001-02
2SJ187	TC002-06
2SJ187-TD	TC002-06
2SK711-BL	TC001-05
2SK711-BL(TE85L)	TC001-05
2SK853-K5	TC001-05
2SK853-T1K5	TC001-05
2SK94-T1X2X3X4	TC001-05
2SK94-X2X3X4	TC001-05
DTA114EUA	TC001-04
DTA114EUA-T106	TC001-04
DTA143EK	TC001-04
DTA143EKA-T146	TC001-04
DTA144EUA-T106	TC001-04
DTC114EUA-T106	TC001-03
DTC143EK	TC001-03
DTC143EKA-T146	TC001-03
DTC144EKA	TC001-03
DTC144EKA-T146	TC001-03
DTC144EUA-T106	TC001-03
FMY1A-T148	TC008-01
FP102T-TL	TC014-01
HAT1020R-EL	TC012-04
IMB2	TC005-07
IMB2-T110	TC005-07
IMB2AT110	TC005-07
IMT1AT108	TC006-10
IMT1US	TC006-09
IMT1US-T110	TC006-09
IMX1	TC005-01
IMX1T110	TC005-01
PT483F1	TR037-01
PT483F1S	TR037-01
SI4410DY-T1-REVA	TC012-06
SI4435DY-T1-REVA	TC012-04
SI4532DY-T1	TC012-03
SI4835DY-T1	TC012-04
SI9435DY-T1	TC012-04
SI9953DY-T1	TC012-02
TPC8005-H(TE12L)	TC012-06
UMA9-TR	TC008-03
UMB11-TN	TC005-01
UMC3NTR	2-8
UMC3TL	2-8
UMG2	TC008-09
UMG2-TR	TC008-09
UMG8-TL	TC008-09
UMG8-TR	TC008-09
UMG8NTR	TC008-09
UMH11	TC005-08
UMH11-TN	TC005-08

TRANSISTOR	Page or ID No.
UMH11NTN	TC005-08
UMH4-TN	TC005-12
UMT1	TC006-10
UMT1-TN	TC006-10
UMT1N-TN	TC006-10
XN4312	TC005-06
XN4312-TW	TC005-06
XN4601	TC006-06
XN4601-TW	TC006-06
XN6401	TC006-01
XN6401-TW	TC006-01
XN6435	TC006-01
XN6435-TW	TC006-01
XN6501	TC006-02
XN6501-TW	TC006-02
XN6534	TC006-02
XN6534-TW	TC006-02
XP4501-TXE	TC006-03
XP4601-TXE	TC006-08
XP6435-TX	TC006-14
XP6501-(TX).SO	TC006-07
XP6501-TXE	TC006-07
XP6534-TX	TC006-07

Index

IC	Page or ID No.
74AC04SJ	TC74HC04P
74AC04SJX	TC74HC04P
74LCX04MTCX	TC74HC04P
AD828AR	RC4558
AD828AR-REEL	RC4558
AK5352-VF(E2)	AK5352-VF-E2
AK5352-VF-E2	AK5352-VF-E2
AK6420AF-E2	AK6420HF
AK6440AF(E2)	AK6440HF
AK6440AF-E2	AK6440HF
AK6440AF-E2	AK6440HF
AK6440AM(E2)	AK6440AM-E2
AK6440AM-E2	AK6440AM-E2
AK6480AF(E2)	AK6480HF
AK6480AF-E2	AK6480HF
AT27C256R-15RC	MBM27C256A
BA10324AFV-E2	XRA10324AF
BA10339FV-E2	LM339
BA10358F-E2	RC4558
BA6285FP(E2)	BA6285FP
BA6285FP-E2	BA6285FP
CAT24WC02JI-TE13	2-8
CAT24WC08J-TE13	2-8
CXA1211M	CXA1211M
CXA1211M-T4	CXA1211M
CXA1521M-TH	CXA1521M
CXA1592R	CXA1392R
CXA1592R-TH	CXA1392R
CXA1760Q-T6	CXA1760Q
CXA1761R-T4	CXA1761R
CXA1762Q(T4)	CXA1762Q
CXA1762Q-T4	CXA1762Q
CXA1793N(E2)	CXA1793N
CXA1793N-E2	CXA1793N
CXA3178M-T4	CX22017
CXA8044Q(T4)	CXA8044Q
CXA8044Q-T4	CXA8044Q
CXD1095AR	CXD1095AR
CXD1095BR	CXD1095AR
CXD1171M	CXD1171M
CXD1171M-TH	CXD1171M
CXD1176Q	CXD1176Q
CXD1176Q-T4	CXD1176Q
CXD1216M	CXD1216M
CXD1216M-TH	CXD1216M
CXD1217Q	CXD1217Q
CXD1217Q-T4	CXD1217Q
CXD2131Q-T4	CXD2131Q
CXD2183R	CXD2183R
CXD2187AR	CXD2187AR
CXD2189AR-T6	CXD2189AR
CXD2190R	CXD2190R
CXD2190R-T6	CXD2190R
CXD2191R-T6	CXD2191R
CXD2194AR	CXD2194AR-TEB
CXD2194AR-TEB	CXD2194AR-TEB

IC	Page or ID No.
CXD2302Q(T4)	CXD2302Q
CXD2302Q-T4	CXD2302Q
CXD2307R-T6	CXD2307R
CXD2310AR	CXD2310R
CXD2310AR-T4	CXD2310R
CXD2422R	CXD2422R
CXD2705AR(T6)	CXD2705AQ
CXD2705AR-T6	CXD2705AQ
CXD2913AQ	CXD2913AQ
CXD3101R	CXD3101R
CXD605-106Q	CXD605-106Q
CXD606-101R	CXD606-101R
CXD607-102Q	CXD607-102Q
CXD8095Q	CXD8095Q
CXD8384Q	CXD8384Q
CXD8525N(E2)	CXD8525N
CXD8525N-E2	CXD8525N
CXD8608R	CXD8608R
CXD8627BR	CXD8627R
CXD8628BR	CXD8628R
CXD8630R	CXD8630R
CXD8635Q	CXD8635Q
CXK1203AR	CXK1203R
CXK1203AR-T4	CXK1203R
CXP901016-602Q	CXP901P016Q
CXP901016-604Q	CXP901P016Q
CXP901016-607Q	CXP901P016Q
CXP901P016Q-1	CXP901P016Q
CXP911016-015Q	CXP911P016Q
CXP911016-016Q	CXP911P016Q
CXP911P016Q-1	CXP911P016Q
CXP913040-011R	CXP913P048R-2
CXP913P048R-2	CXP913P048R-2
CY62256LL-70ZC-T2	CY62256-70SNC-T2
HD151015T	HD151015T
HD151015TEL	HD151015T
HD6437034AD49F	HD6437034SC81F
HD6437034SC81F	HD6437034SC81F
HD64F3048VF8	HD64F3048F
IDT71V256SA15PZ-TL	IDT71256L-35TP
K6T1008V2E-TB70	CXK581000ATM-70LL
KM68FV1000T-7	KM68V1000BLT-7L
LC75821W-DS	LC75821W
LM1881M	LM1881N
LM1881MX	LM1881N
LM2901M	NJM2901N
LM35DM	LM35DM
LM35DMX	LM35DM
LM4040AIM3-2.5	LM4040BIM3
LT1253CS8(E2)	LT1253CS8
LT1253CS8-E2	LT1253CS8
LT1254CS(E2)	LT1254CS
LT1254CS-E2	LT1254CS

IC	Page or ID No.
M5M5256CVP-10VXL	M5M5256CVP10VXV
M5M5256CVP10VXV	M5M5256CVP10VXV
M5M5256DVP-10VXL	M5M5256CVP10VXV
M62352GP	M62352P
M62352GP-75ED	M62352P
MAX202CSE	MAX202CSE
MAX202CSE-T	MAX202CSE
MAX793SCSE	MAX793
MB3793-30PNF-ER	MB3793-42PNF
MB88346BPFV	MB88346APF
MB88346BPFV-EF	MB88346APF
MB88347LPFV-ER	MB88347PFV-G-BND
MBM29F800BA-90PF	MBM29F800BA-90PFTN
MC14051BF	MC74HC4051N
MC68HC68VBIFB	MC68HC68VBIFB
MCD005AM-TLM	MCD005AM
MM74HC00MTCX	TC74HC00P
MM74HCT244SJX	TC74HC244P
MSM7661BGS-BK-R1	MSM7661GS-BK-R1
NC7SZ08P5	TC7S08F
NJM062V(TE2)	RC4558
NJM062V-TE2	RC4558
NJM1496V(TE2)	MC1496P
NJM1496V-TE2	MC1496P
NJM2041M-D	RC4558
NJM2041M-D(TE2)	RC4558
NJM2041MD	RC4558
NJM2060V(TE2)	XRA10324AF
NJM2249V(TE2)	NJM2249V
NJM2534V(TE2)	NJM2234M
NJM2901M-TE2	NJM2901N
NJM2901V(TE2)	NJM2901N
NJM2903M	UA393DC
NJM2903M-TE2	UA393DC
NJM2903V(TE2)	UA393DC
NJM2904M	RC4558
NJM2904M(TE2)	RC4558
NJM324V(TE2)	XRA10324AF
NJM3403AM	XRA10324AF
NJM3403AM(TE2)	XRA10324AF
NJM386M(TE2)	NJM386D-E
NJM4558V(TE2)	RC4558
NJM4558V-TE2	RC4558
NJM4560M	RC4558
NJM4560M-D(TE2)	RC4558
NJM4560M-TE2	RC4558
NJM4560MD	RC4558
NJM4560MD-TE2	RC4558
NJM4580E(TE2)	RC4558
NJM4580V(TE2)	RC4558
NJM4580V-TE2	RC4558
NJM4580VTE2	RC4558
QL12X16B-XPF100C	QL12X16B-XPF100C
REF-03GSR	REF-03GS
RH5RL33AA-T1	NJU7201U50
RH5RL50AA-T1	NJU7201U50

IC	Page or ID No.
S-80741AL-A5-S	S-8051ANB
S-80741AL-A5-T1	S-8051ANB
S-80745AN-D9-S	S-8054HN-CB
S-80750AN-JE-T1	S-8054HN-CB
S-80840ANUP-ED4-T2	S-8054HN-CB
S-81230SGUP-DQB-T1	S-81225AG-RH
S80741AL-A5	S-8051ANB
SC7S04F	TC7S04F
SC7S32F	TC7S32F
SM5872AS(ET)	SM5872AS-ET
SM5872AS-ET	SM5872AS-ET
SN74CBT3306PWR	SN74CBT3306PWR
SN74CBT3306PWR-12	SN74CBT3306PWR
SN74HC00APW-E05	TC74HC00P
SN74HC00APW-E20	TC74HC00P
SN74HC00APWR	TC74HC00P
SN74HC02APWR	TC74HC02P
SN74HC04APW-E05	TC74HC04P
SN74HC04APW-E20	TC74HC04P
SN74HC04APWR	TC74HC04P
SN74HC08APW-E05	TC74HC08P
SN74HC08APWR	TC74HC08P
SN74HC158APW-E05	TC74HC158P
SN74HC158APWR	TC74HC158P
SN74HC163APW(R)	TC74HC163P
SN74HC163APW-E05	TC74HC163P
SN74HC163APWR	TC74HC163P
SN74HC165ANS	TC74HC165P
SN74HC165ANS-E05	TC74HC165P
SN74HC165ANSR	TC74HC165P
SN74HC165APW-E05	TC74HC165P
SN74HC165APWR	TC74HC165P
SN74HC175APW(R)	TC74HC175P
SN74HC175APW-E05	TC74HC175P
SN74HC175APWR	TC74HC175P
SN74HC193ANS	TC74HC193P
SN74HC193ANSR	TC74HC193P
SN74HC244APW-E05	TC74HC244P
SN74HC244APWR	TC74HC244P
SN74HC32APW-E05	TC74HC32P
SN74HC32APWR	TC74HC32P
SN74HC574APW-E05	TC74HC574P
SN74HC574APW-E20	TC74HC574P
SN74HC595ADB(R)	TC74HC595P
SN74HC595ADB-E05	TC74HC595P
SN74HC595ADBR	TC74HC595P
SN74HC74APW-E05	TC74HC74P
SN74HC74APWR	TC74HC74P
SN74HCT08APW-E05	TC74HC08P
SN74HCT08APW-E20	TC74HC08P
SN74HCT08APWR	TC74HC08P
SN74HCT244ANS	TC74HC244P
SN74HCT244ANS-E05	TC74HC244P
SN74HCT244ANSR	TC74HC244P
SN74HCT244APW-E05	TC74HC244P
SN74HCT244APWR	TC74HC244P
SN74HCT541APW(R)	MC74HC541N
SN74HCT541APW-E05	MC74HC541N
SN74HCT541APWR	MC74HC541N

IC	Page or ID No.
SN74LS123NS	SN74123N
SN74LS123NSR	SN74123N
SN74LVC16245ADGGR	IDT74FCT16245ATPV-TR
SN74LVC245APW-E20	TC74HC245P
SN74LVC245APWR	TC74HC245P
SN74LVC821APW-E05	V74ACT821
SN74LVC821APWR	V74ACT821
STK12C68-S45	STK12C68-S45
TC4051BFT(EL,N)	MC74HC4051N
TC4052BFT(EL,N)	MC74HC4052N
TC4053BFT(EL.N)	MC74HC4053F
TC4053BFT(EL,N)	MC74HC4053F
TC4066BFT	CD4066AE
TC4066BFT(EL,N)	CD4066AE
TC4S69F	TC7S04F
TC4S69F(TE85R)	TC7S04F
TC4W53FU	TC4W53FU
TC4W53FU(TE12R)	TC4W53FU
TC4W66FU(TE12R)	TC4W66F
TC74HC165AF(EL)	TC74HC165P
TC74HC4052AFT(EL)	MC74HC4052N
TC74HC4053AFT(EL)	MC74HC4053F
TC74HC4538AFT(EL)	MC74HC4538N
TC74VHC02FT(EL)	TC74HC02P
TC74VHC04FT(EL)	TC74HC04P
TC74VHC125FT(EL)	MC74HC125N
TC74VHC157FT(EL)	TC74HC157P
TC74VHC221AFT(EL)	TC74HC221P
TC74VHC244FT(EL)	TC74HC244P
TC74VHC245FT(EL)	TC74HC245P
TC74VHC32FT(EL)	TC74HC32P
TC74VHC374FT(EL)	TC74HC374P
TC74VHC541FT(EL)	MC74HC541N
TC74VHC573FT(EL)	TC74HC573F
TC74VHC574FT(EL)	TC74HC574P
TC74VHC74FT(EL)	TC74HC74P
TC74VHC86FT(EL)	TC74HC86P
TC7S00FU(TE85R)	TC7S00F
TC7S00FU-TE85R	TC7S00F
TC7S04F(TE85R)	TC7S04F
TC7S04FU(TE85R)	TC7S04F
TC7S04FU-TE85R	TC7S04F
TC7S08F	TC7S08F
TC7S08F(TE85R)	TC7S08F
TC7S08FU(TE85R)	TC7S08F
TC7S08FU-TE85R	TC7S08F
TC7S14FU(TE85R)	TC7S14FU
TC7S32F(TE85R)	TC7S32F
TC7S32FU(TE85R)	TC7S32F
TC7S32FU-TE85R	TC7S32F
TC7S66FU	SC14S66F
TC7S66FU(TE85R)	SC14S66F
TC7S86FU	TC7S86FU
TC7S86FU(TE85R)	TC7S86FU
TC7SET08FU(TE85R)	TC7S08F
TC7SH00FU-TE85R	TC7S00F
TC7SH04FU	TC7S04F
TC7SH04FU-TE85R	TC7S04F
TC7SH08F-TE85R	TC7S08F
TC7SH08FU(TE85R)	TC7S08F
TC7SH08FU-TE85R	TC7S08F
TC7SH32FU(TE85R)	TC7S32F
TC7SH32FU-TE85R	TC7S32F
TC7SH86FU(TE85R)	TC7S86FU
TC7SH86FU-TE85R	TC7S86FU
TC7W00FU	TC7W00F
TC7W00FU(TE12R)	TC7W00F
TC7W04FU	TC7W04F
TC7W04FU(TE12R)	TC7W04F
TC7W08FU	TC7W08F
TC7W08FU(TE12R)	TC7W08F
TC7W14FU(TE12R)	TC7W14FU
TC7W32FU	TC7W32FU
TC7W32FU(TE12R)	TC7W32FU
TC7W53FU(TE12R)	TC4W53FU
TC7W74FU	TC7W74FU
TC7W74FU(TE12R)	TC7W74FU
TC7WH04FU(TE12R)	TC7W04F
TC7WH157FU(TE12R)	2-8
TC7WH74FU(TE12R)	TC7W74FU
TC7WH74FU(TR12R)	TC7W74FU
TK16074MTL	TK16074MTL
TL062CPW	RC4558
TL062CPWR	RC4558
TL062CPWR-12	RC4558
TL064CPW	XRA10324AF
TL064CPW-E05	XRA10324AF
TL064CPWR	XRA10324AF
TL074CPW	XRA10324AF
TL074CPW-E05	XRA10324AF
TL074CPWR-12	XRA10324AF
TL082CPW-E05	RC4558
TL082CPWR	RC4558
TL1451ACPWR-12	TL1451CNS
TL16C550CPT	TL16C550CPT
TL32088CNS-E20	TL32088CNS
TL32088CNSR	TL32088CNS
TL5001CD	TL5001
TL5001CDR	TL5001
TLC272CPW-E05	RC4558
TLC272CPWR	RC4558
TLC272CPWR-12	RC4558
TLC2932IPW-E20	TLC2932IPW
TLC2932IPWR	TLC2932IPW
TLC320AD58CDWR	TLC320AD58CDWR
TSB11LV01PT-TEB	TSB11LV01PT-TEB
UPC1093T	UPC1093T
UPC1093T-E1	UPC1093T
UPC311G2	UPC311C
UPC311G2-E2	UPC311C
UPC324G2	XRA10324AF
UPC324G2-E2	XRA10324AF
UPC358G2-E2	RC4558
UPC4572G2	RC4558
UPC4572G2-E2	RC4558
UPC812G2	RC4558

IC	Page or ID No.
UPC812G2-E2	RC4558
UPD16502GS(1)	2-8
UPD16502GS-E2	2-8
UPD482445LG4-B10-9MH-E2-HDC	UPD482445G5-60
UPD6453GT-658-E2	UPD6453GT
UPD78064GF-146-3BA	UPD78064GF-3BA
UPD78064GF-201-3BA	UPD78064GF-3BA
UPD78P064GF-3BA	UPD78064GF-3BA
X20C05J-55	X20C05J-55
X24645S8I-2.7T2	X24645S8C7000
X24645S8T2	X24645S8C7000
X24C02S-T1	2-8
X24C08SC7000	2-8
XC95144XL-10TQ100C	XC95144-10TQ100C
XRD7523AID-JTR	MP7523
ZA4024	ZA4024

OTHER	Page or ID No.
GP2S07B	MA013-01
GP2S27B	MA013-01
M-30	MA007-02
NJL5183KA-F20-TE1	MA014-03

TRANSISTOR

—TOP VIEW—

UMC3NTR (R1=10K,R2=10K R3=10K,R4=10K)
UMC3TL (R1=47K,R2=47K,R3=4.7K,R4=10K)

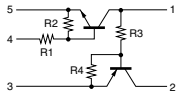

IC

CAT24WC02JI-TE13 (CATALYST)
CAT24WC08J-TE13 (CATALYST)
X24C02S-T1 (XICOR)
X24C08SC7000 (XICOR)

SERIAL EEPROM
—TOP VIEW—

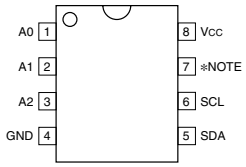

INPUTS
A0 - A2 : ADDRESS
SCL : SERIAL CLOCK
$\overline{WC}$: WRITE CONTROL
WP : WRITE PROTECT

INPUT/OUTPUT
SDA : SERIAL DATA

OTHERS
NC : NO CONNECTION
TEST : TEST PIN

※NOTE :

TYPE	MEMORY	PIN 7
BR24C02F	2 K	TEST
X24C02 S-24C02	2 K	$\overline{WC}$
CAT24WC02	2 K	WP
X24C04	4 K	TEST
X24C08	8 K	TEST
CAT24WC08	8 K	WP
CAT24WC16 BR24E16FV	16 K	WP
NM24C16	16 K	NC
CAT24WC64	64 K	WP
24LC128T	128 K	WP

UPD16502GS(1) (NEC)
UPD16502GS-E2

C-MOS CCD DRIVER
—TOP VIEW—

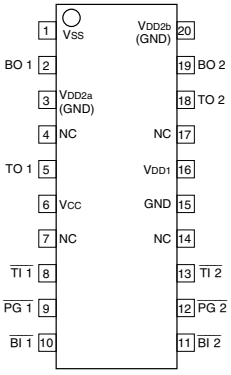

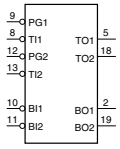

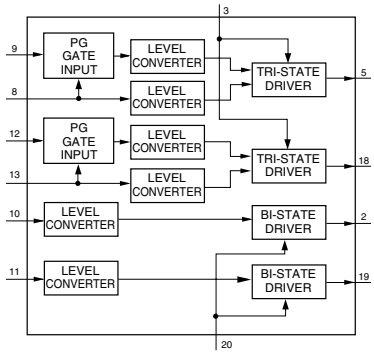

TC7WH157FU(TE12R) (TOSHIBA)

2-CHANNEL MULTIPLEXER
—TOP VIEW—

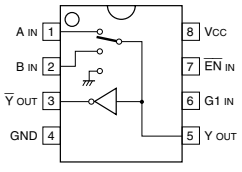

INPUTS				OUTPUTS	
$\overline{EN}$	G1	A	B	Y	$\overline{Y}$
1	×	×	×	0	1
0	0	0	×	0	1
0	0	1	×	1	0
0	1	×	0	0	1
0	1	×	1	1	0

0 : LOW LEVEL
1 : HIGH LEVEL
× : DON'T CARE

Section 3
Block Diagrams

Index

System/Board	Page	Remarks
Audio	3-16	
Camera Overall	3-2	
Servo	3-21	
System Control	3-18	
VTR Overall	3-4	
AA-104	3-17	
AT-127	3-15	DSR-500WS/500WSP
AT-150B	3-14	DSR-570WS/570WSP
CC-68	3-21	
CN-1867	3-17	
CN-2277/1519	3-13	
CP-373/315	3-8	
DPR-141B/141	3-8	
DU-36	3-23	
DV-21C/21	3-24	
ES-26	3-8	
FP-118A/118	3-16	
FP-99	3-19	
HN-227	3-21	
KY-405	3-18	
LE-221	3-17	
MB-833	3-23	
MT-114	3-21	
RP-91	3-20	
SE-295	3-21	
SE-297	3-21	
SE-511	3-14	
SV-213	3-21	
SW-19	3-16	
SW-929	3-19	
VA-190	3-6	
VE-44	3-25	

3-1

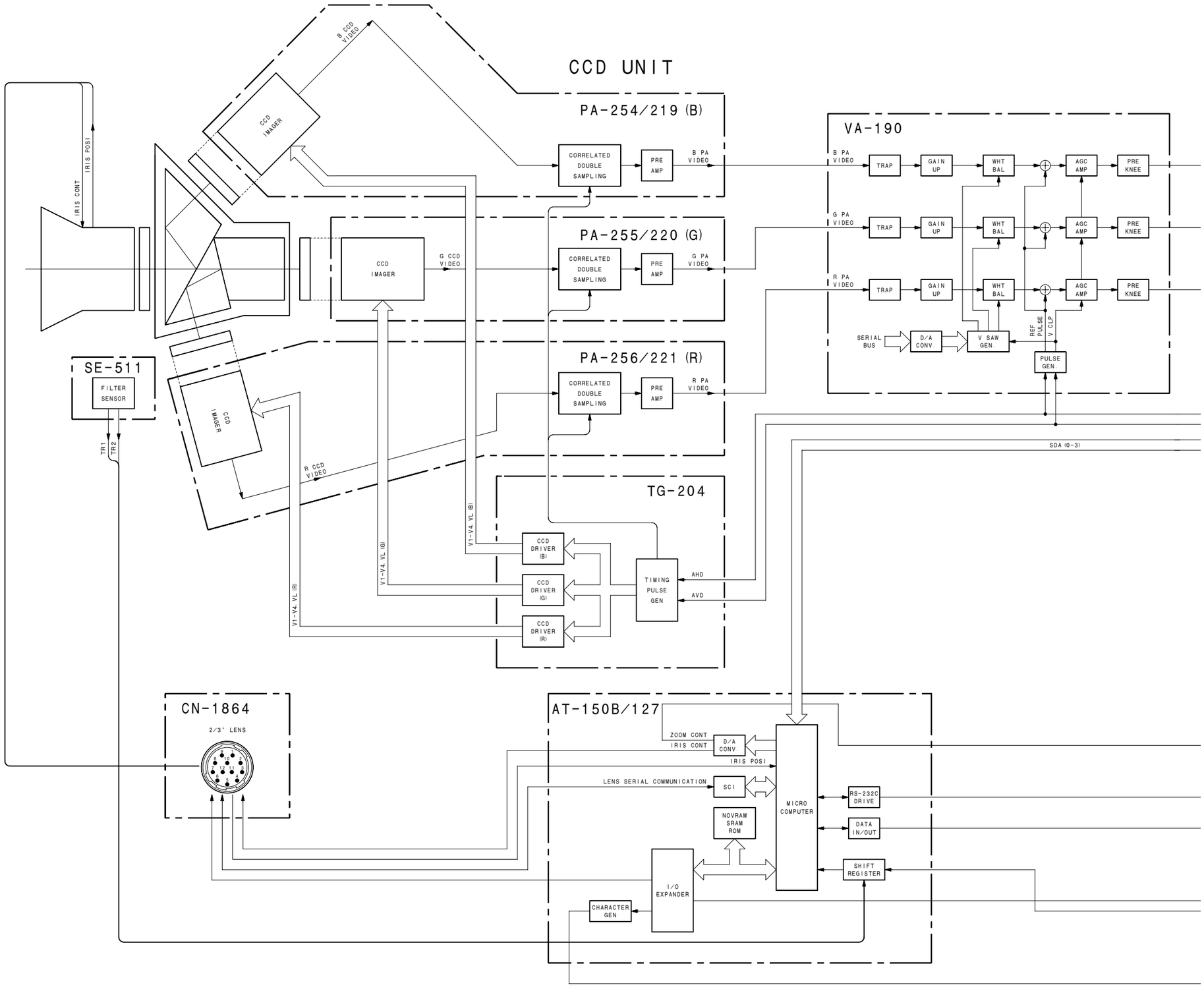
CCD UNIT
PA-254/219 (B)
PA-255/220 (G)
PA-256/221 (R)
B CCD VIDEO
G CCD VIDEO
R CCD VIDEO
CCD IMAGER
CORRELATED DOUBLE SAMPLING
PRE AMP
B PA VIDEO
G PA VIDEO
R PA VIDEO
IRIS CONT
IRIS POSI
SE-511
FILTER SENSOR
TR1
TR2
VA-190
TRAP
GAIN UP
WHT BAL
AGC AMP
PRE KNEE
SERIAL BUS
D/A CONV.
V SAW GEN.
REF PULSE
V CLP
PULSE GEN.
SDA (0-3)
TG-204
CCD DRIVER (B)
CCD DRIVER (G)
CCD DRIVER (R)
V1-V4 VL (B)
V1-V4 VL (G)
V1-V4 VL (R)
TIMING PULSE GEN
AHD
AVD
CN-1864
2/3" LENS
AT-150B/127
ZOOM CONT
IRIS CONT
IRIS POSI
LENS SERIAL COMMUNICATION
SCI
NOVRAM SRAM ROM
MICRO COMPUTER
RS-232C DRIVE
DATA IN/OUT
SHIFT REGISTER
I/O EXPANDER
CHARACTER GEN

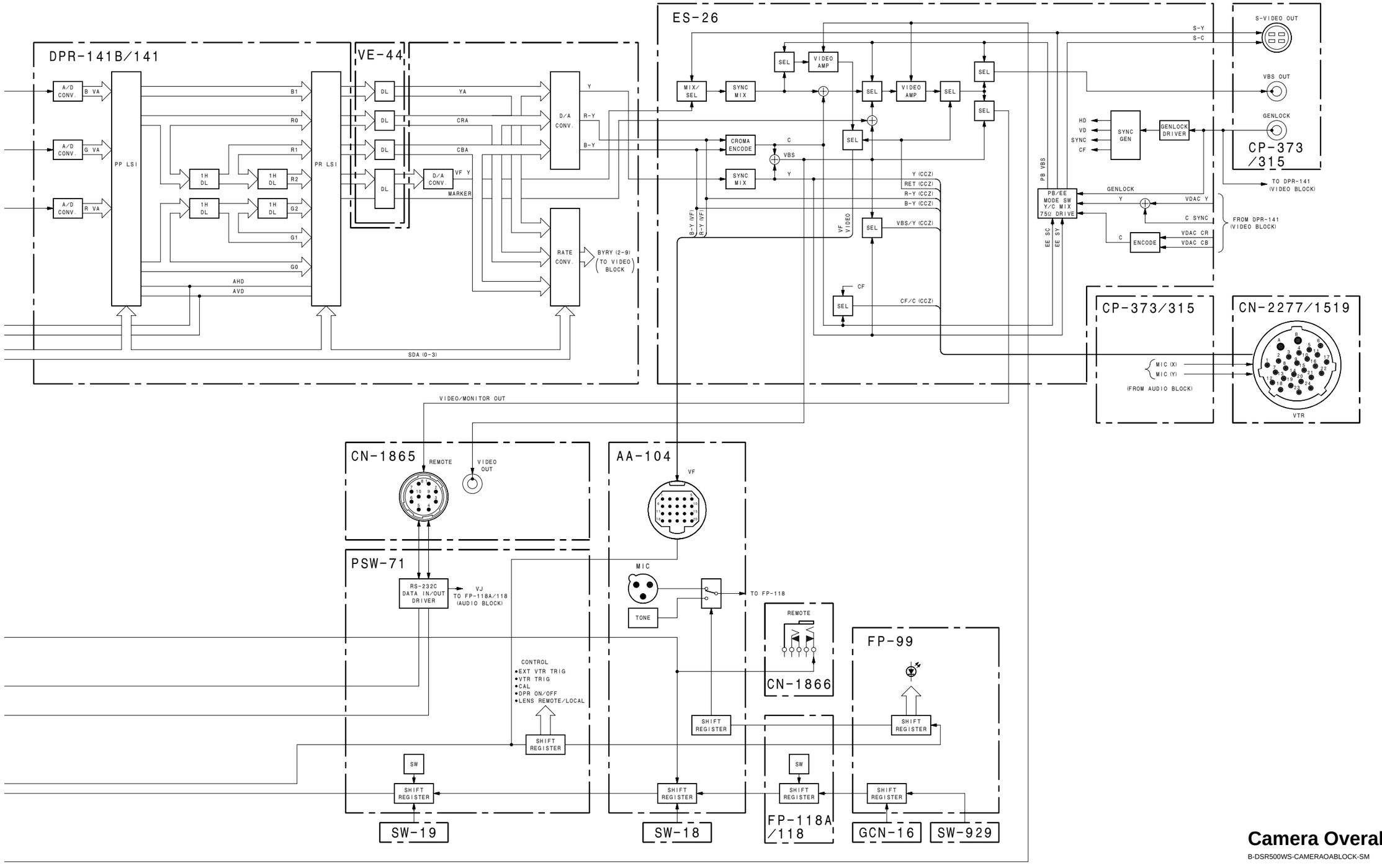

Camera Overall

B-DSR500WS-CAMERAOABLOCK-SM

VTR Overall (1/2)

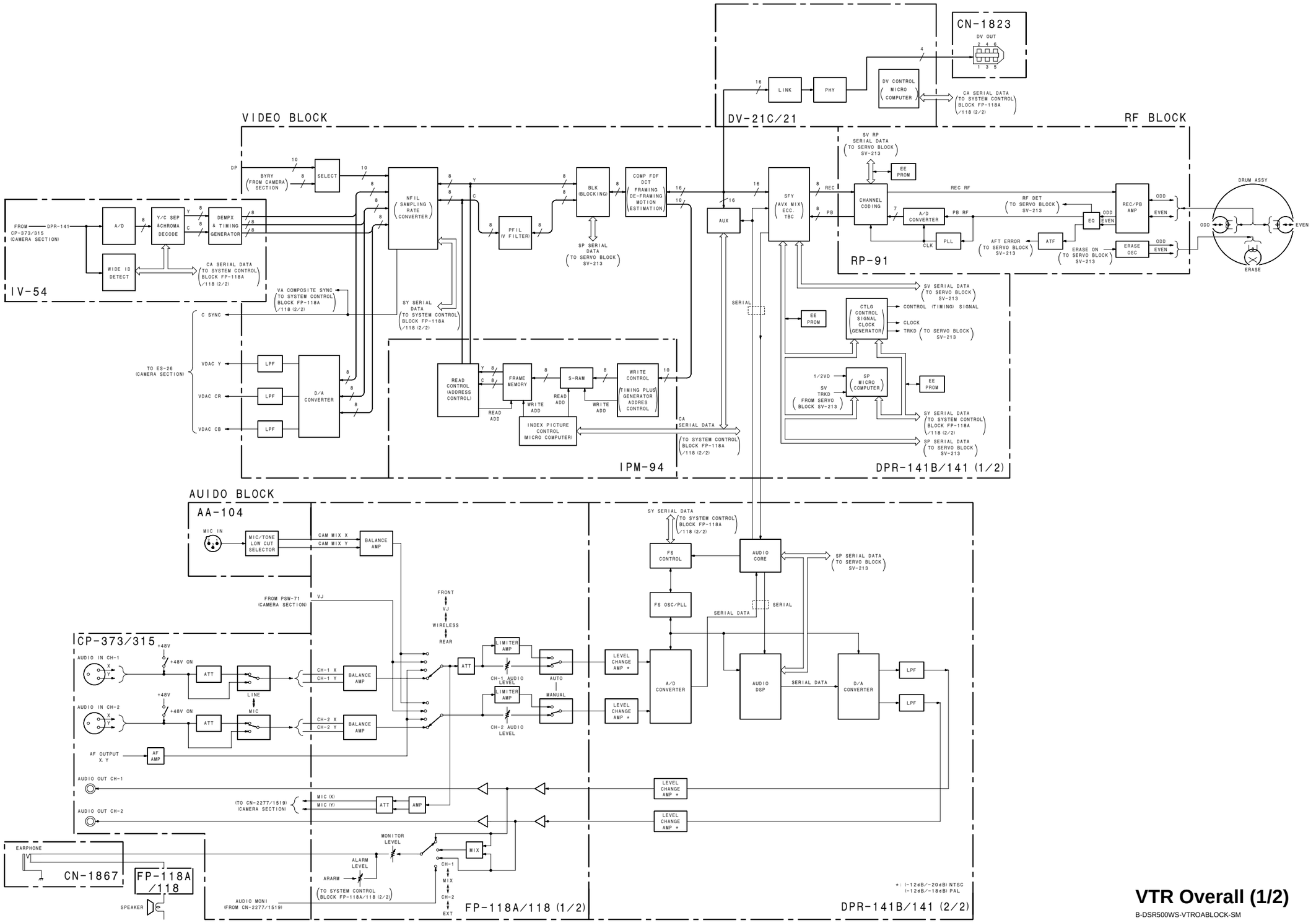

3-4

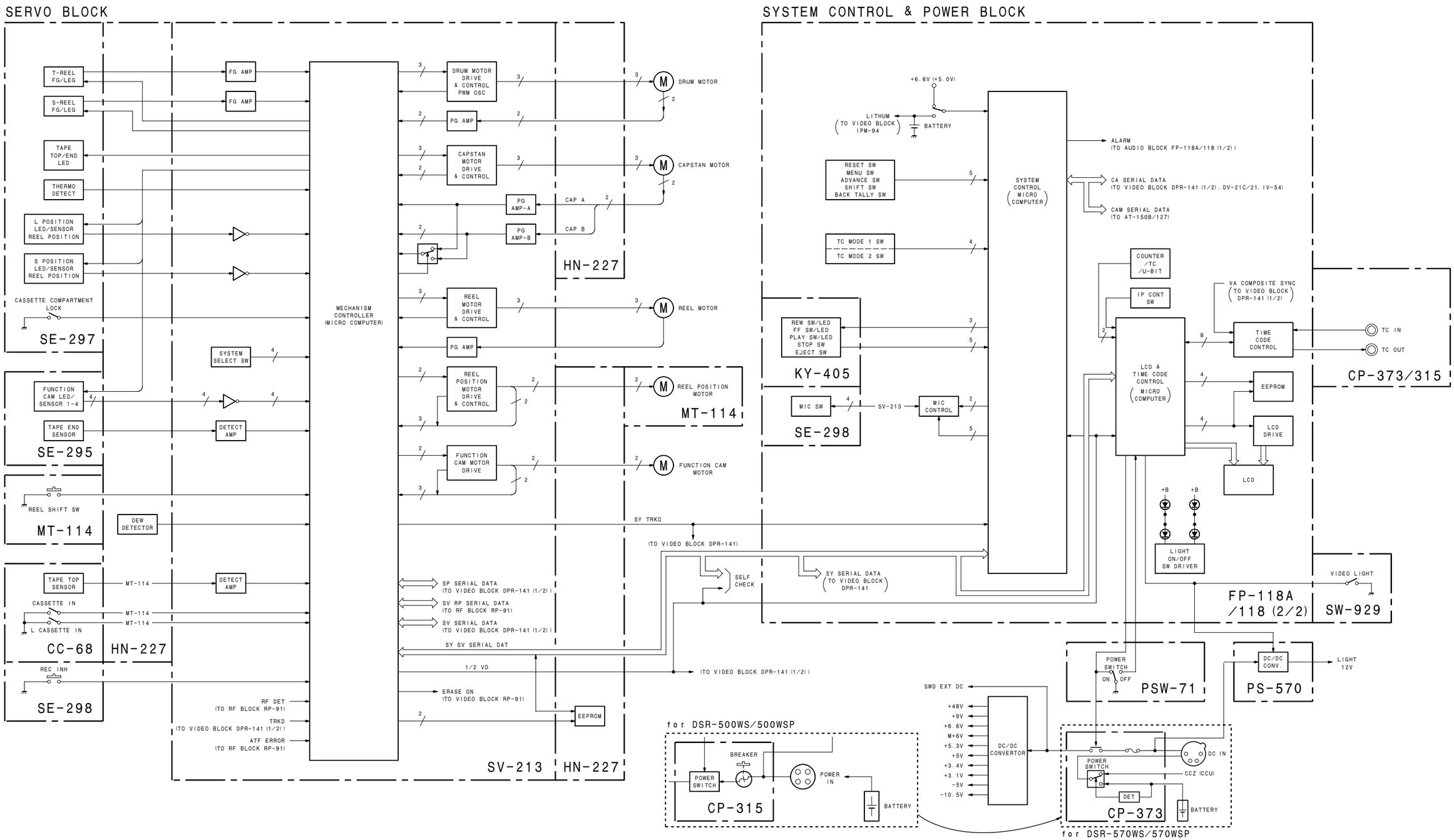

VTR Overall (2/2)

B-DSR500WS-VTROABLOCK-SM

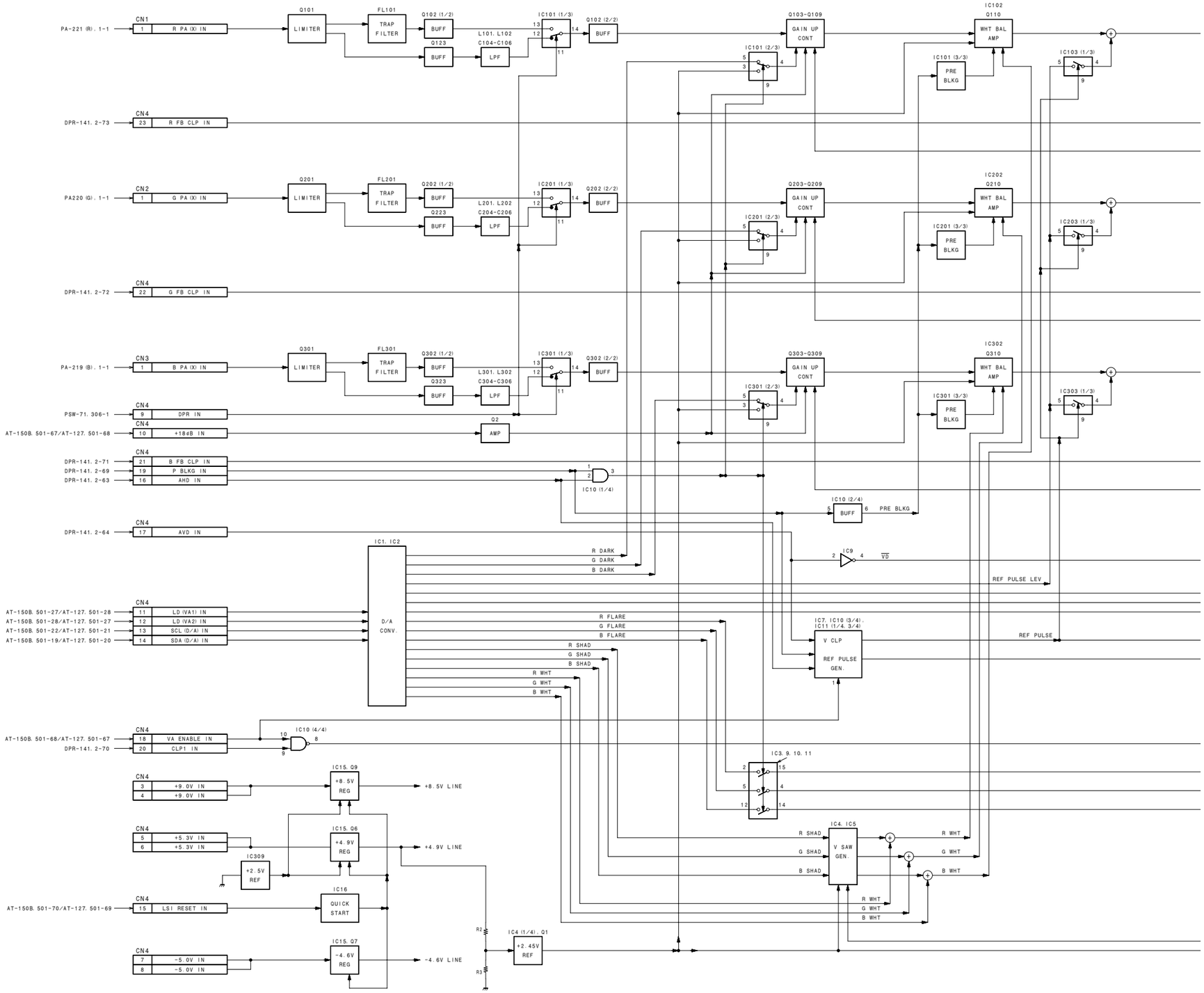
CN1
1 R PA(X) IN
PA-221 (R), 1-1
Q101
LIMITER
FL101
TRAP FILTER
Q102 (1/2)
BUFF
Q123
BUFF
L101, L102
C104-C106
LPF
IC101 (1/3)
Q102 (2/2)
BUFF
IC101 (2/3)
Q103-Q109
GAIN UP CONT
IC102
Q110
WHT BAL AMP
IC101 (3/3)
PRE BLKG
IC103 (1/3)
CN4
23 R FB CLP IN
DPR-141, 2-73
CN2
1 G PA(X) IN
PA220 (G), 1-1
Q201
LIMITER
FL201
TRAP FILTER
Q202 (1/2)
BUFF
Q223
BUFF
L201, L202
C204-C206
LPF
IC201 (1/3)
Q202 (2/2)
BUFF
IC201 (2/3)
Q203-Q209
GAIN UP CONT
IC202
Q210
WHT BAL AMP
IC201 (3/3)
PRE BLKG
IC203 (1/3)
CN4
22 G FB CLP IN
DPR-141, 2-72
CN3
1 B PA(X) IN
PA-219 (B), 1-1
Q301
LIMITER
FL301
TRAP FILTER
Q302 (1/2)
BUFF
Q323
BUFF
L301, L302
C304-C306
LPF
IC301 (1/3)
Q302 (2/2)
BUFF
IC301 (2/3)
Q303-Q309
GAIN UP CONT
IC302
Q310
WHT BAL AMP
IC301 (3/3)
PRE BLKG
IC303 (1/3)
CN4
9 DPR IN
PSW-71, 306-1
10 +18dB IN
AT-150B, 501-67/AT-127, 501-68
Q2
AMP
CN4
21 B FB CLP IN
19 P BLKG IN
16 AHD IN
DPR-141, 2-71
DPR-141, 2-69
DPR-141, 2-63
IC10 (1/4)
IC10 (2/4)
BUFF
PRE BLKG
CN4
17 AVD IN
DPR-141, 2-64
IC1, IC2
D/A CONV.
R DARK
G DARK
B DARK
IC9
VD
REF PULSE LEV
CN4
11 LD (VA1) IN
12 LD (VA2) IN
13 SCL (D/A) IN
14 SDA (D/A) IN
AT-150B, 501-27/AT-127, 501-28
AT-150B, 501-28/AT-127, 501-27
AT-150B, 501-22/AT-127, 501-21
AT-150B, 501-19/AT-127, 501-20
R FLARE
G FLARE
B FLARE
R SHAD
G SHAD
B SHAD
R WHT
G WHT
B WHT
IC7, IC10 (3/4), IC11 (1/4, 3/4)
V CLP
REF PULSE GEN.
REF PULSE
CN4
18 VA ENABLE IN
20 CLP1 IN
AT-150B, 501-68/AT-127, 501-67
DPR-141, 2-70
IC10 (4/4)
IC3, 9, 10, 11
CN4
3 +9.0V IN
4 +9.0V IN
IC15, 09
+8.5V REG
+8.5V LINE
CN4
5 +5.3V IN
6 +5.3V IN
IC15, 06
+4.9V REG
+4.9V LINE
IC309
+2.5V REF
IC16
QUICK START
AT-150B, 501-70/AT-127, 501-69
CN4
15 LSI RESET IN
CN4
7 -5.0V IN
8 -5.0V IN
IC15, 07
-4.6V REG
-4.6V LINE
R2
R3
IC4 (1/4), Q1
+2.45V REF
IC4, IC5
V SAW GEN.

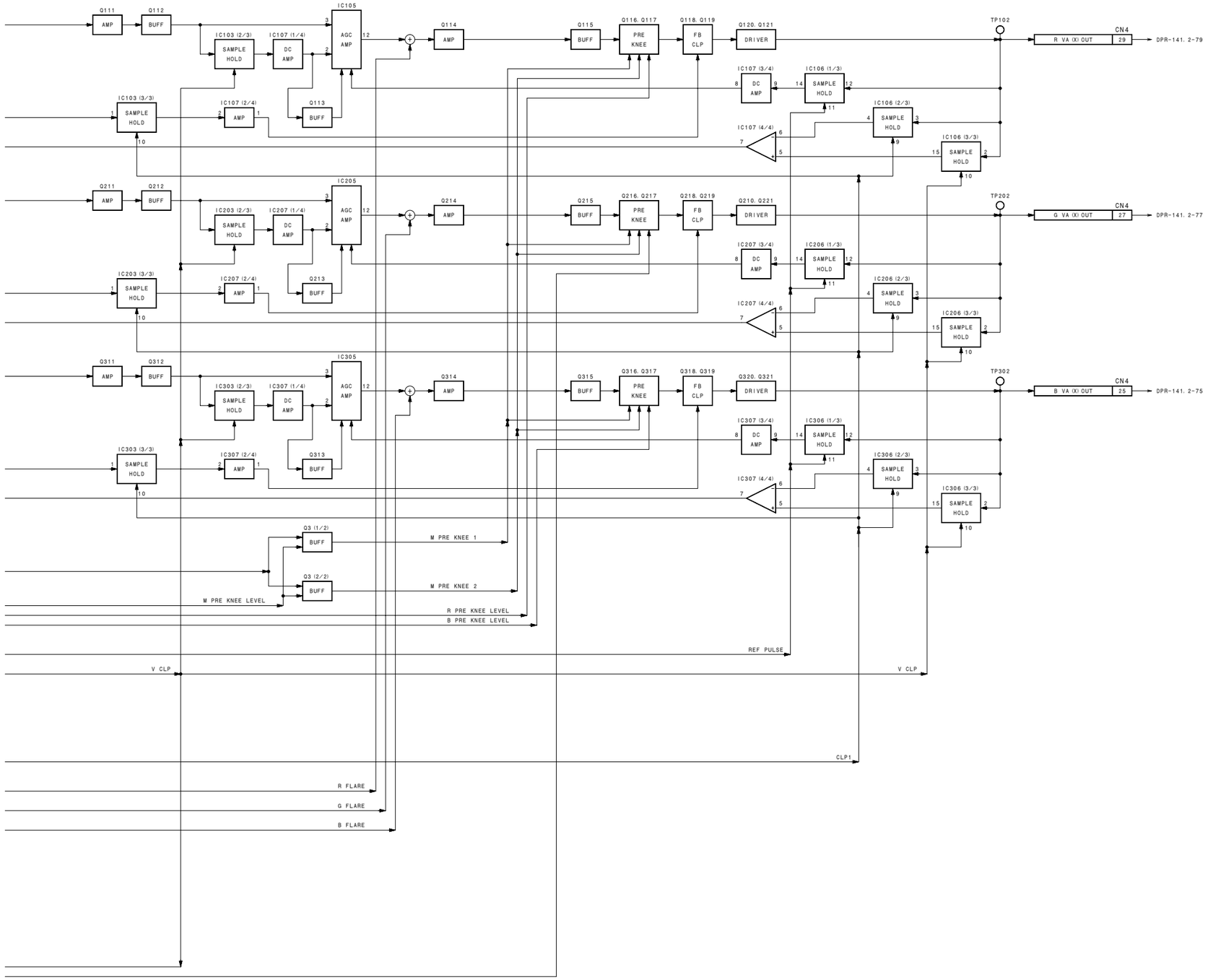

VA-190

B-DSR500WS-VA190BLOCK-SM

DPR-141B/141 (1/3) CP-373/315 (1/7), ES-26 (1/3)

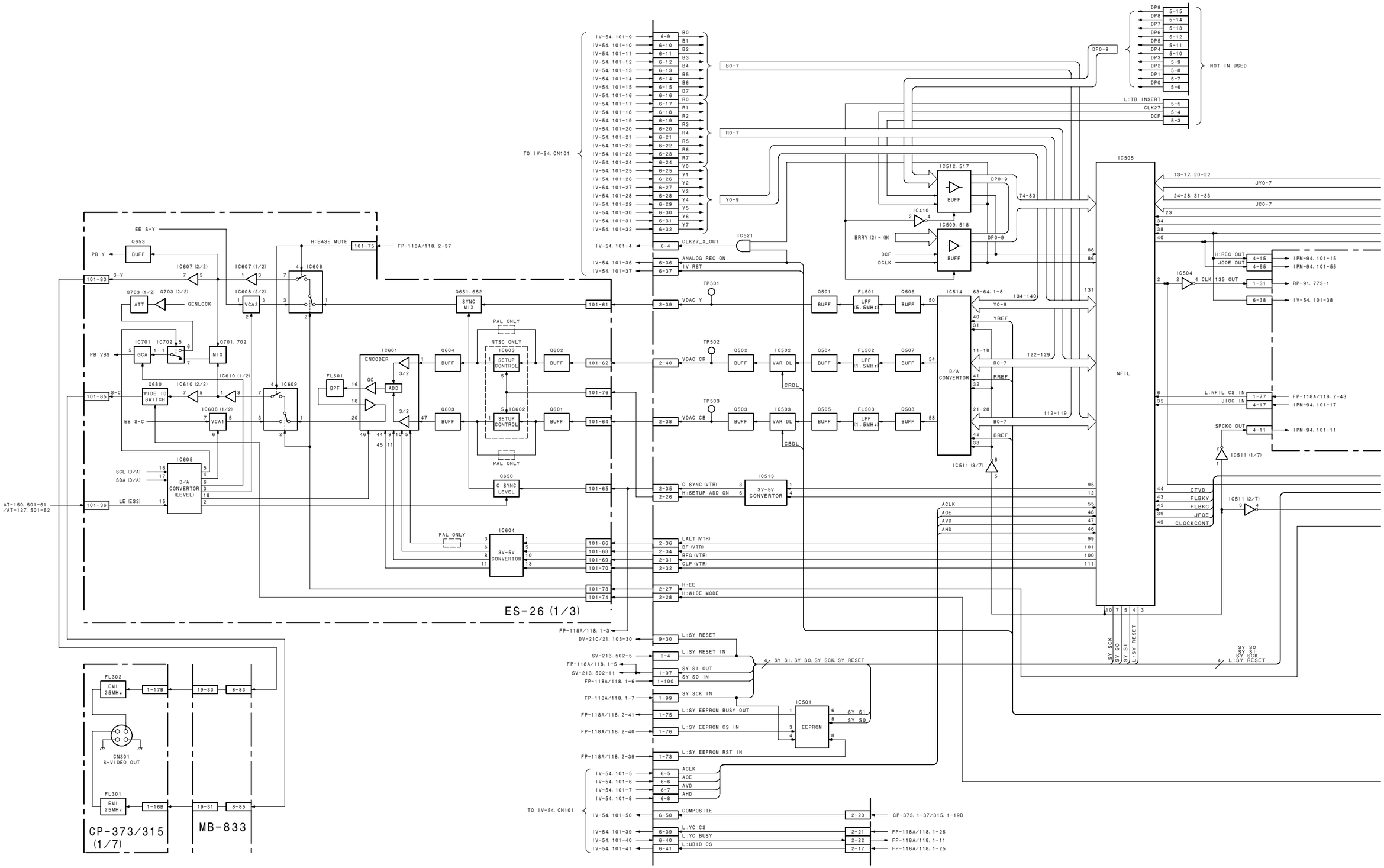

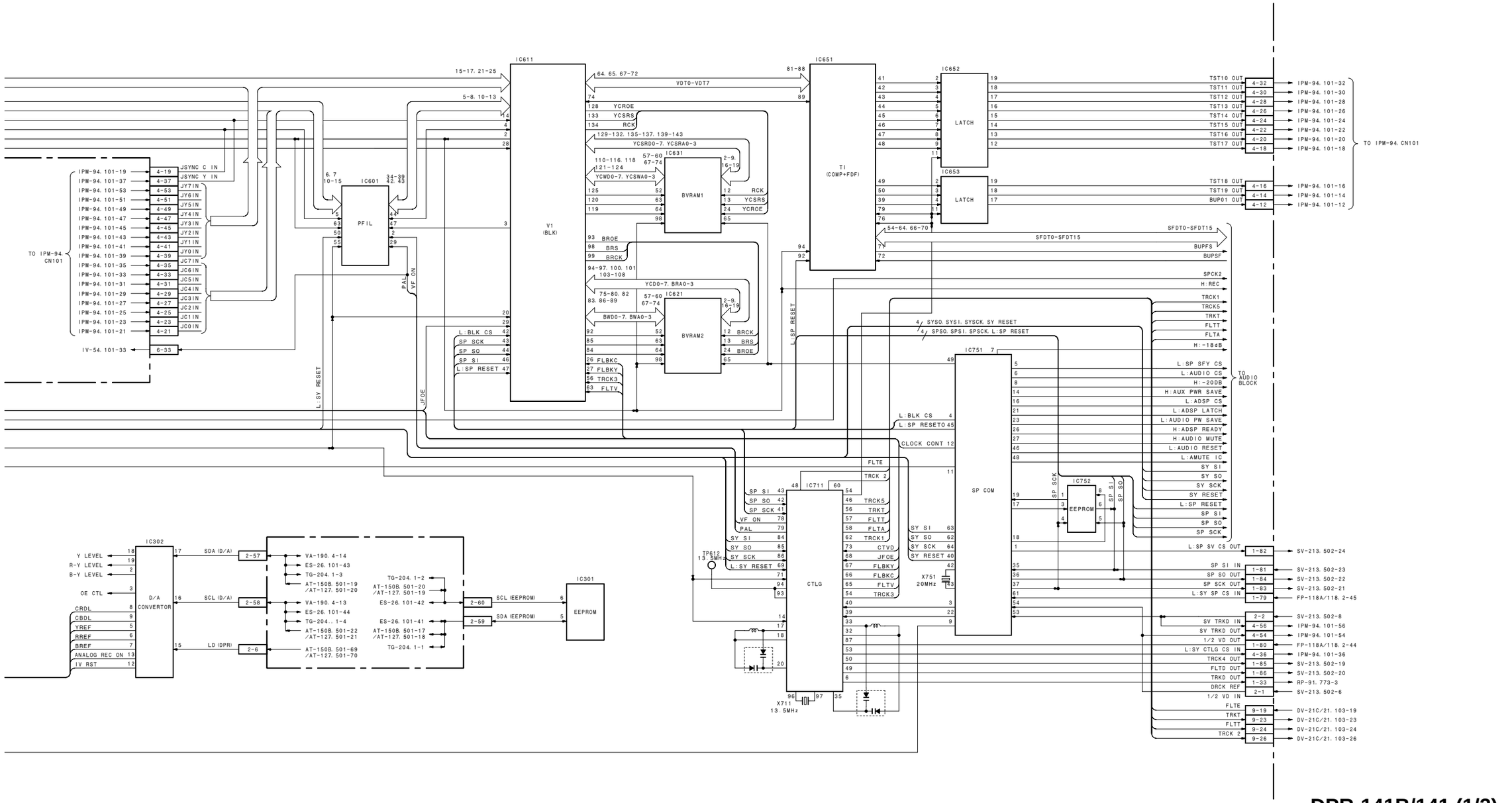

DPR-141B/141 (1/3)
CP-373/315 (1/7)
ES-26 (1/3)
B-DSR500WS-DPR141BLOCK-SM

DPR-141B/141 (2/3)

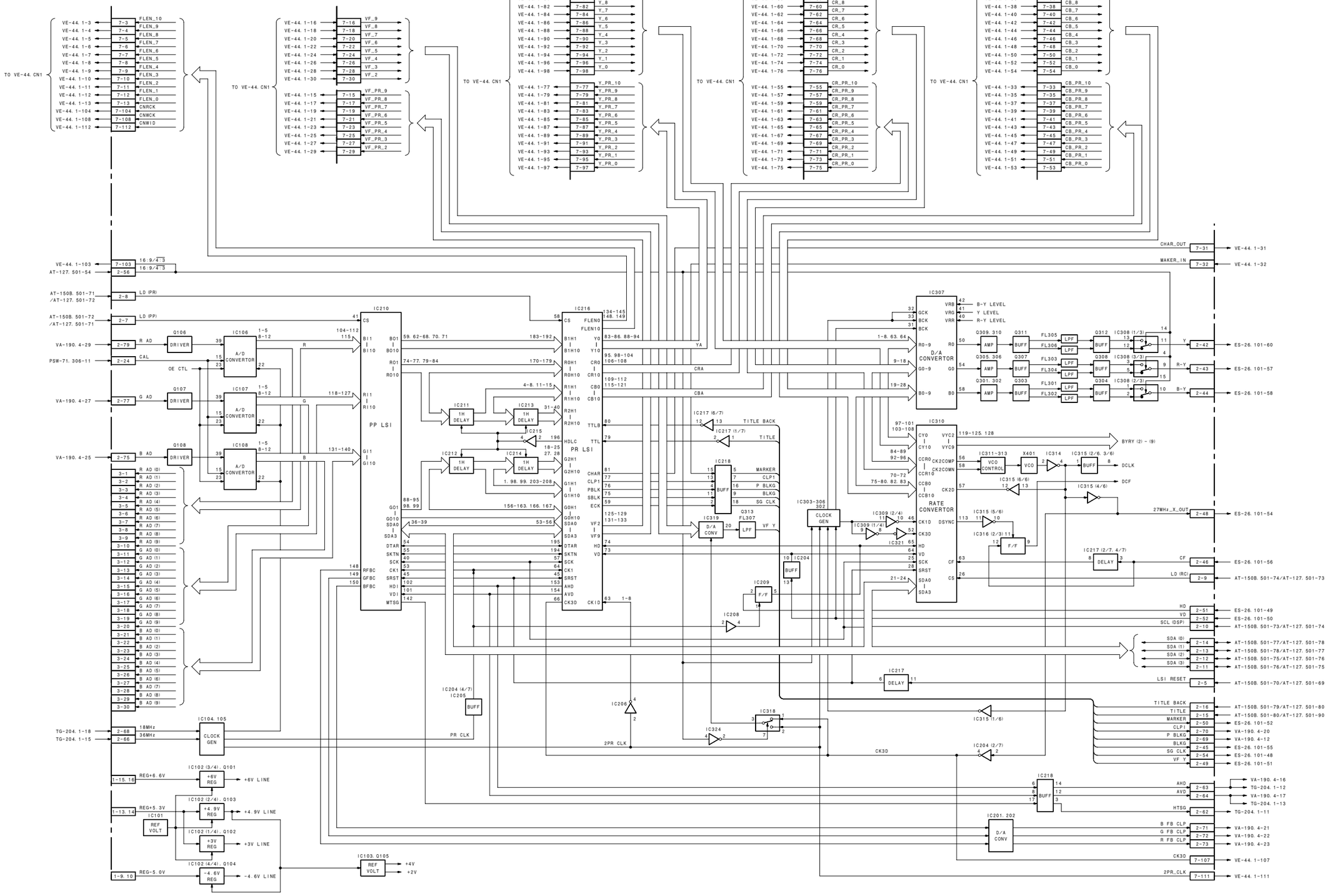

DPR-141B/141 (2/3)

B-DSR500WS-DPR141BLOCK-SM

DPR-141B/141 (3/3)

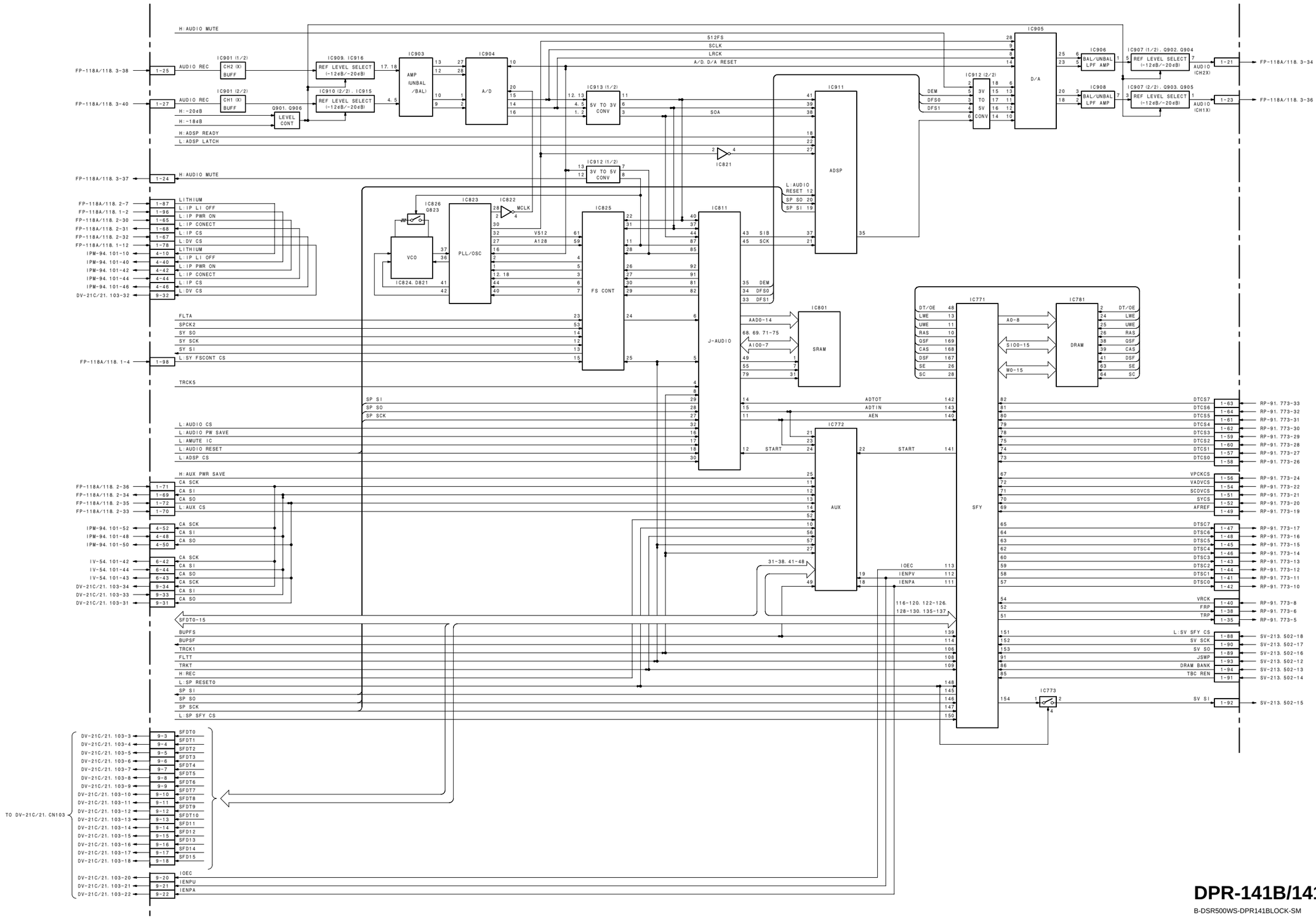

DPR-141B/141 (3/3)

B-DSR500WS-DPR141BLOCK-SM

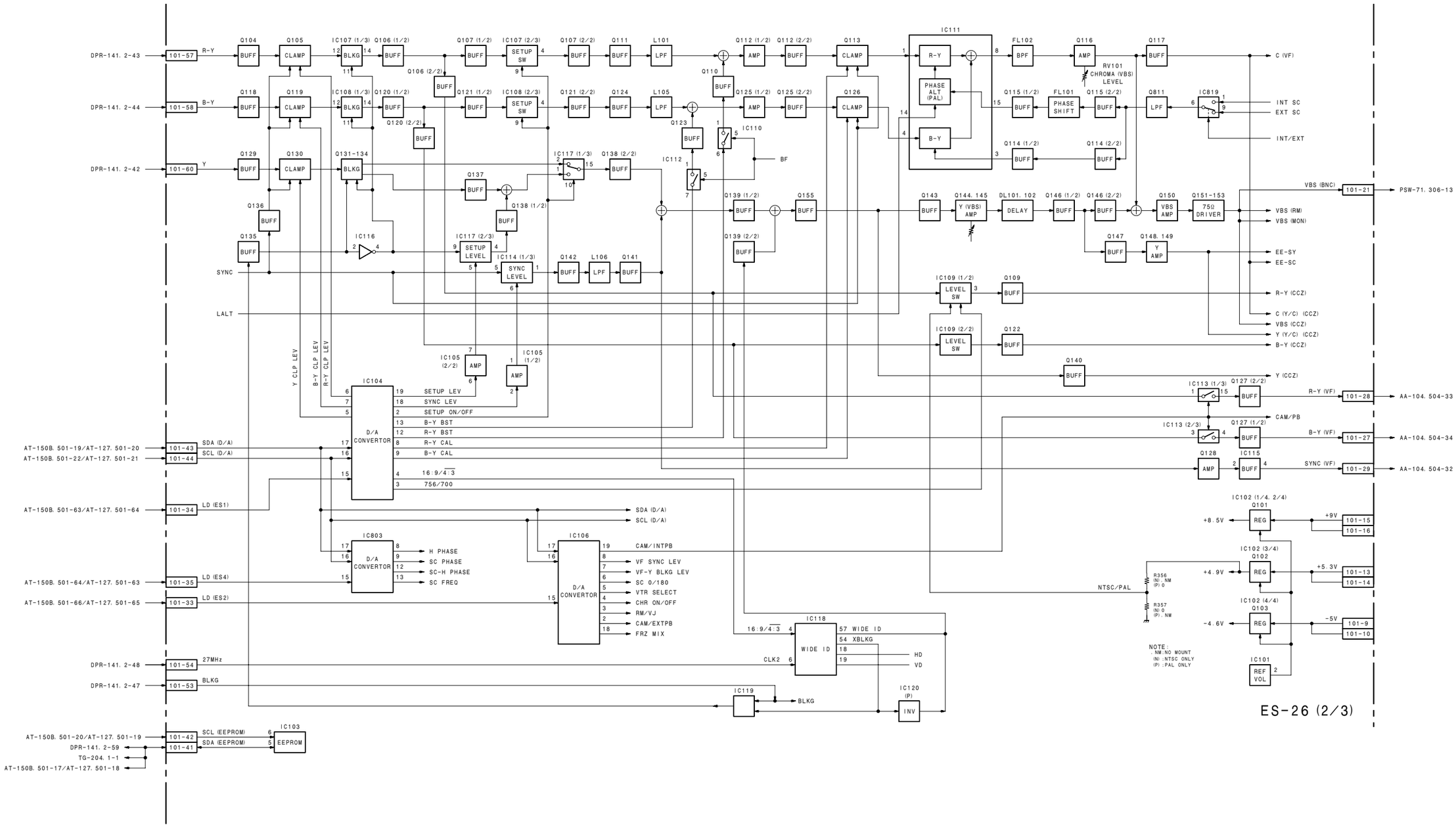

ES-26 (2/3)

B-DSR500WS-ES26BLOCK-SM

ES-26 (3/3) CN-2277/1519, CP-373/315 (2/7) (3/7) (4/7)

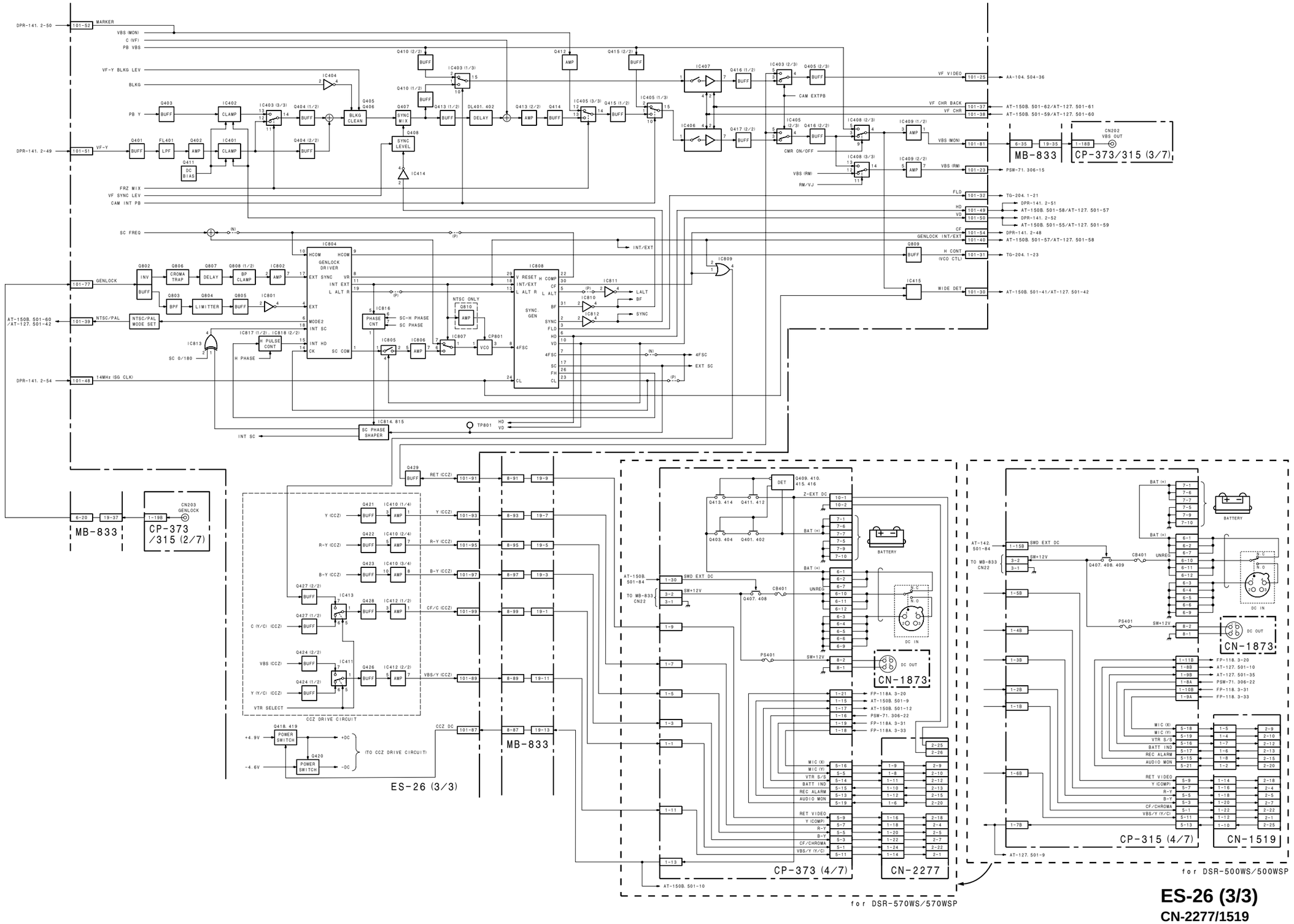

ES-26 (3/3)

CN-2277/1519

CP-373/315 (2/7) (3/7) (4/7)

B-DSR500WS-ES26BLOCK-SM

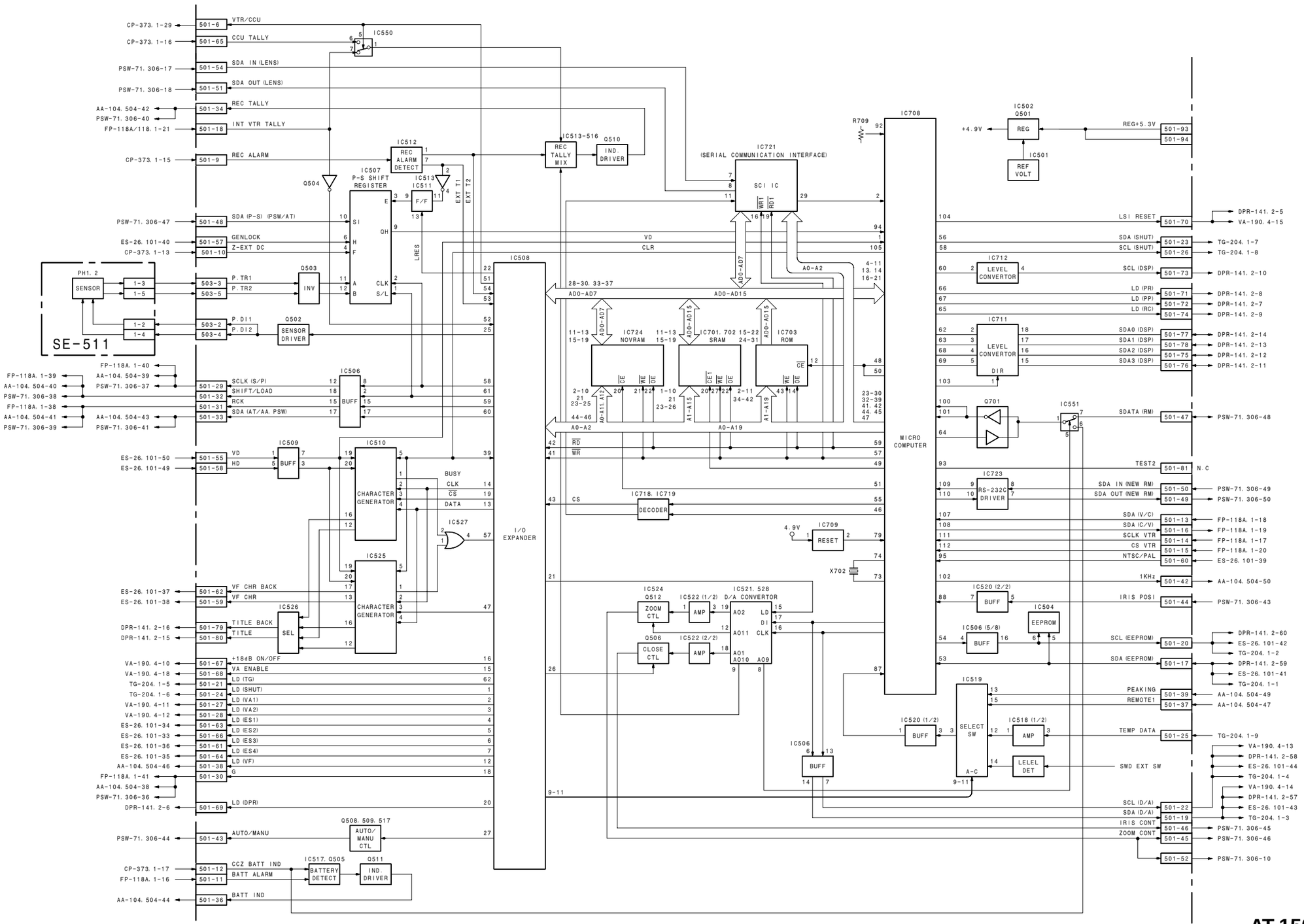

AT-150B

SE-511

FOR DSR-570WS/570WSP

B-DSR500WS-AT127BLOCK-SM

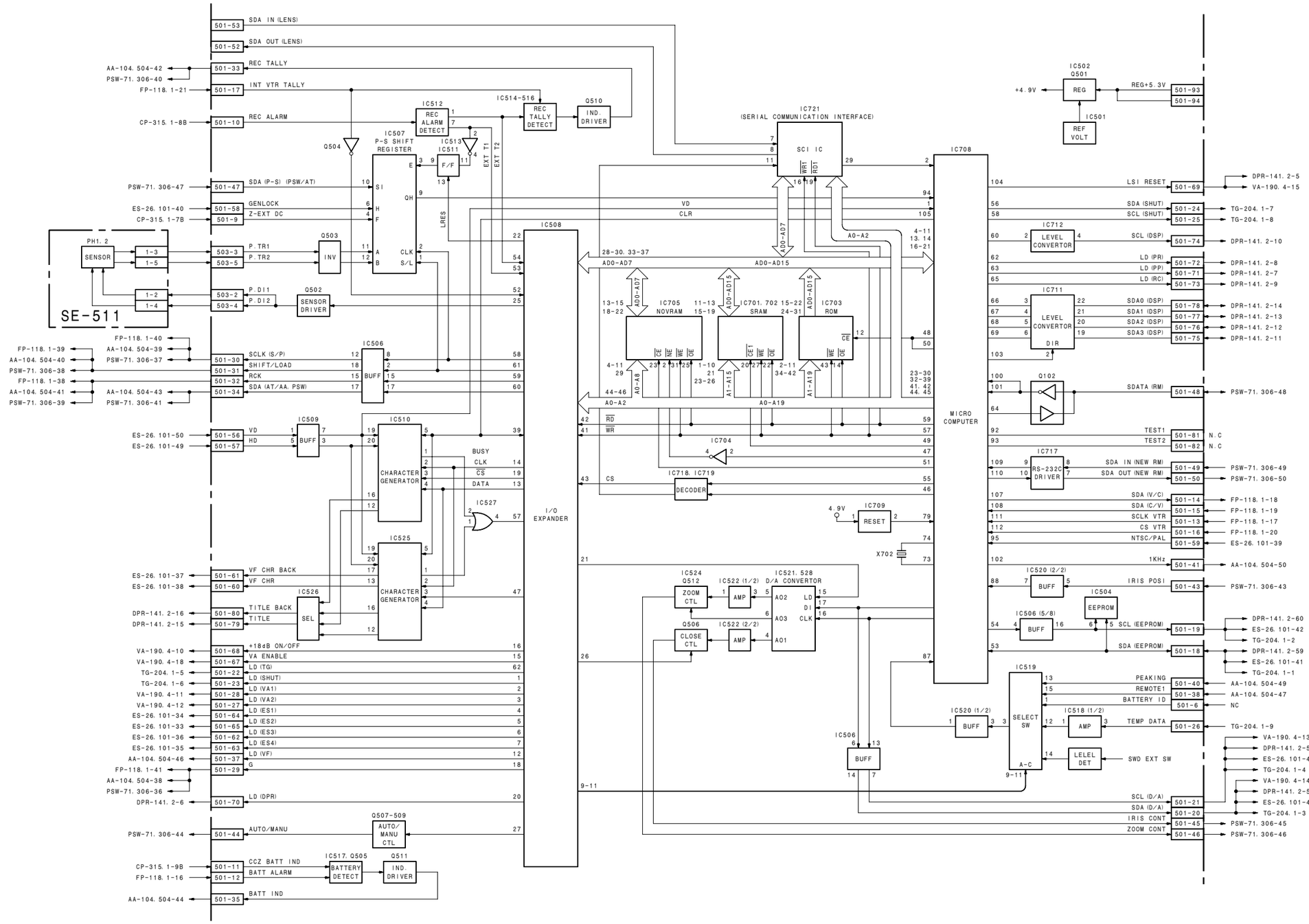

AT-127

SE-511

FOR DSR-500WS/500WSP

B-DSR500WS-AT127BLOCK-SM

Audio (1/2) CP-373/315 (5/7), FP-118A/118 (1/4), SW-19

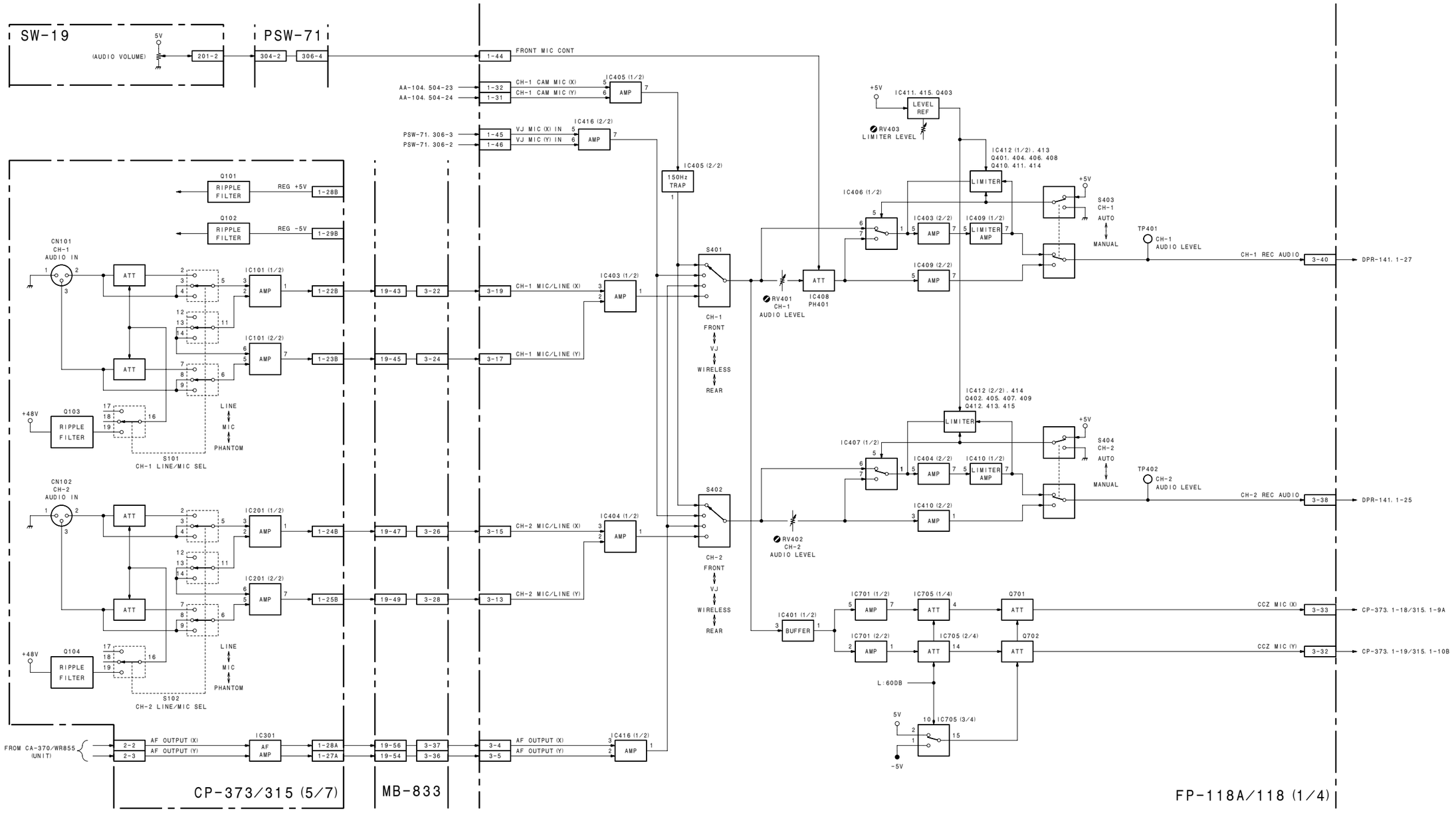

Audio (1/2)
CP-373/315 (5/7)
FP-118A/118 (1/4)
SW-19

B-DSR500WS-AUDIOBLOCK-SM

Audio (2/2) AA-104, CP-373/315 (6/7), CN-1867, FP-118A/118 (2/4), LE-221 (2/2)

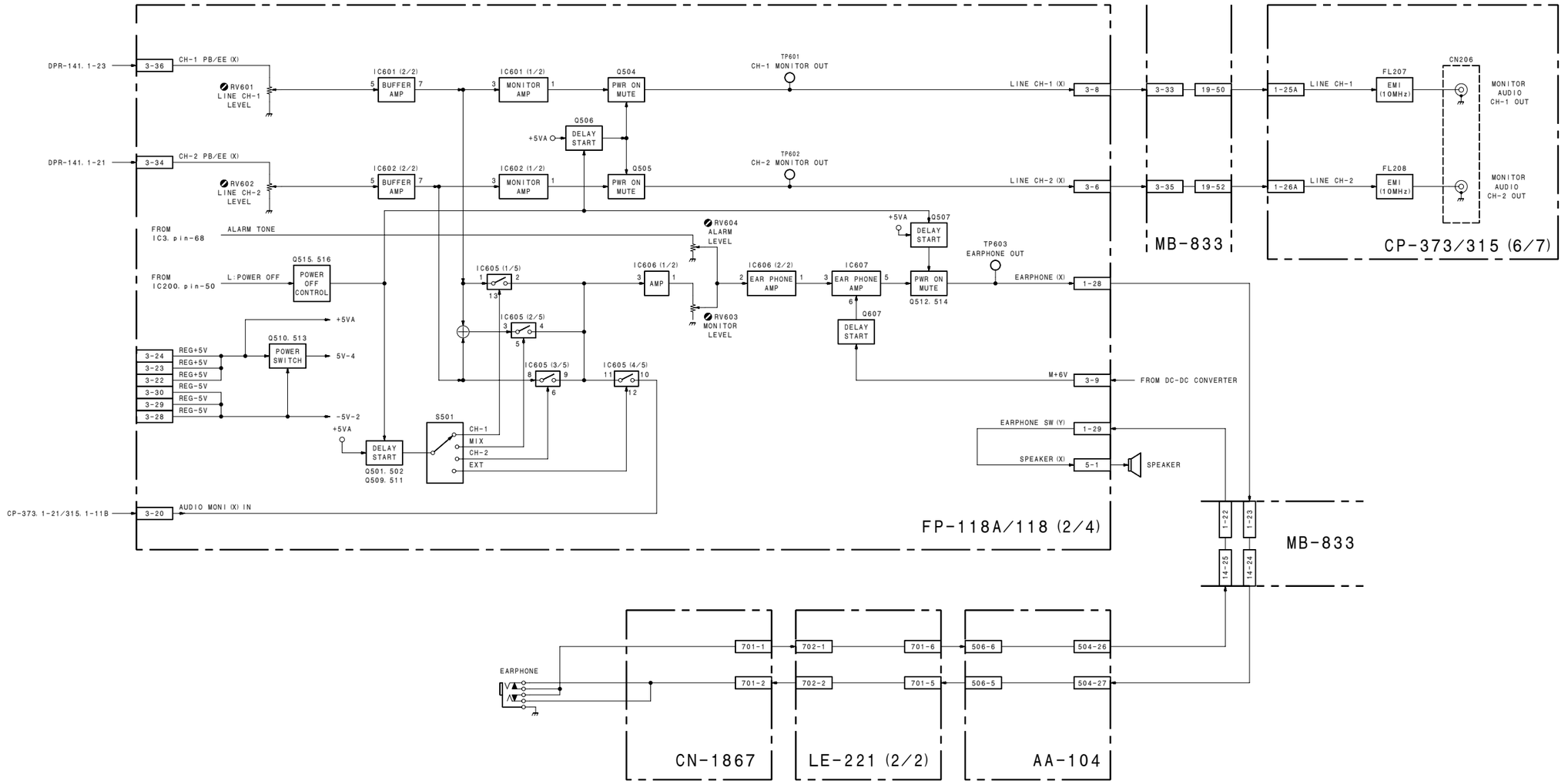

Audio (2/2)
AA-104
CP-373/315 (6/7)
CN-1867
FP-118A/118 (2/4)
LE-221 (2/2)

B-DSR500WS-AUDIOBLOCK-SM

System Control (1/2) FP-118A/118 (3/4), KY-405, LE-221 (1/2)

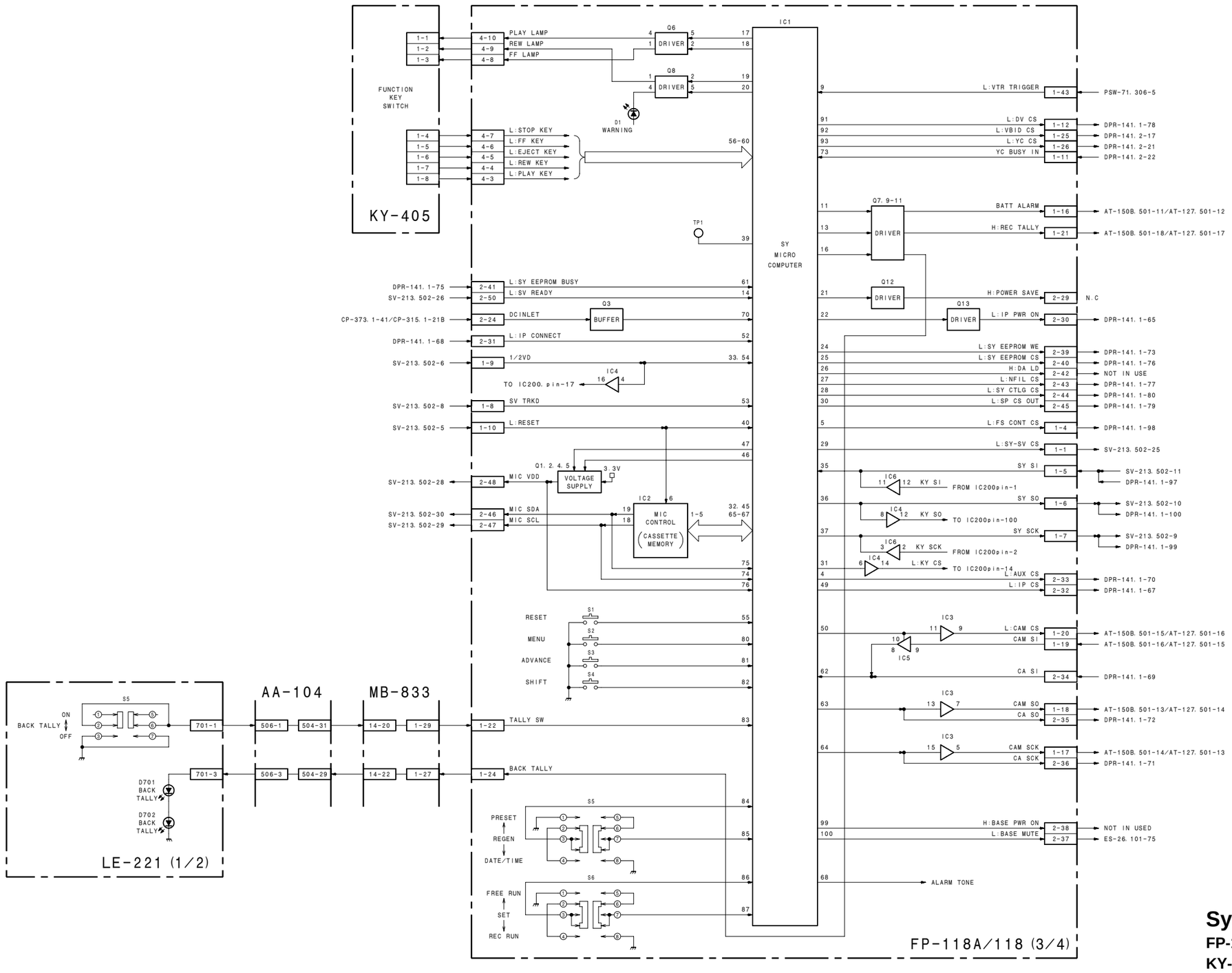

System Control (1/2)
FP-118A/118 (3/4)
KY-405
LE-221 (1/2)

B-DSR500WS-SYSCONBLOCK-SM

System Control (2/2) CP-373/315 (7/7), FP-118A/118 (4/4), FP-99, SW-929

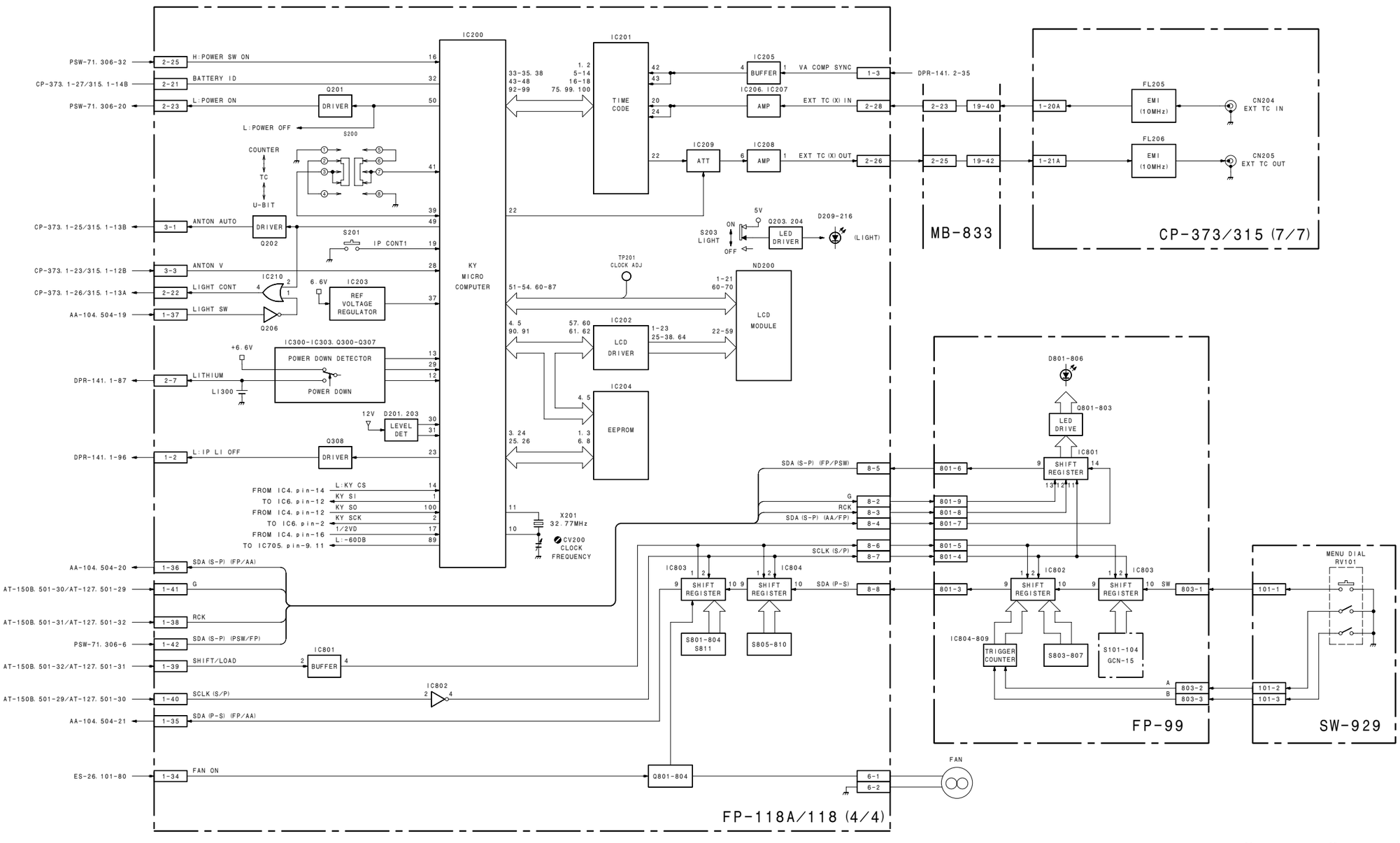

System Control (2/2)

CP-373/315 (7/7)
FP-118A/118 (4/4)
FP-99
SW-929

B-DSR500WS-SYSCONBLOCK-SM

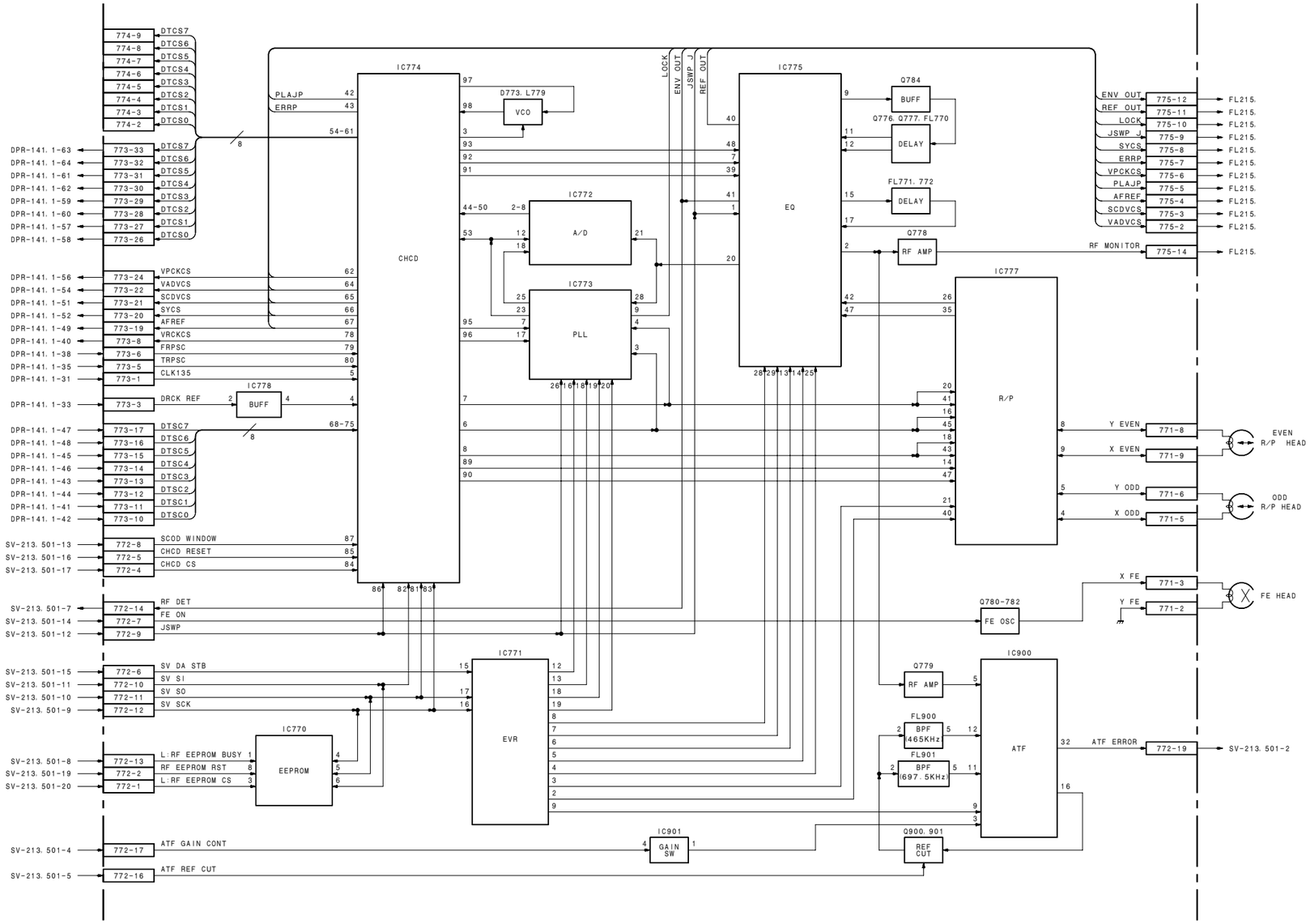
IC774
CHCD
IC775
EQ
IC772
A/D
IC773
PLL
IC778
BUFF
IC777
R/P
IC771
EVR
IC770
EEPROM
IC901
GAIN SW
IC900
ATF
D773. L779
VCO
Q784
BUFF
Q776. Q777. FL770
DELAY
FL771. 772
DELAY
Q778
RF AMP
Q780-782
FE OSC
Q779
RF AMP
FL900
BPF (465KHz)
FL901
BPF (697.5KHz)
Q900. 901
REF CUT
LOCK
ENV OUT
JSWP J
REF OUT
PLAJP
ERRP
54-61
DTCS7
DTCS6
DTCS5
DTCS4
DTCS3
DTCS2
DTCS1
DTCS0
VPCKCS
VADVCS
SCDVCS
SYCS
AFREF
VRCKCS
FRPSC
TRPSC
CLK135
DRCK REF
DTSC7
DTSC6
DTSC5
DTSC4
DTSC3
DTSC2
DTSC1
DTSC0
SCOD WINDOW
CHCD RESET
CHCD CS
RF DET
FE ON
JSWP
SV DA STB
SV SI
SV SO
SV SCK
L:RF EEPROM BUSY
RF EEPROM RST
L:RF EEPROM CS
ATF GAIN CONT
ATF REF CUT
ENV OUT
REF OUT
LOCK
JSWP J
SYCS
ERRP
VPCKCS
PLAJP
AFREF
SCDVCS
VADVCS
RF MONITOR
Y EVEN
X EVEN
Y ODD
X ODD
X FE
Y FE
ATF ERROR
EVEN R/P HEAD
ODD R/P HEAD
FE HEAD
DPR-141. 1-63
DPR-141. 1-64
DPR-141. 1-61
DPR-141. 1-62
DPR-141. 1-59
DPR-141. 1-60
DPR-141. 1-57
DPR-141. 1-58
DPR-141. 1-56
DPR-141. 1-54
DPR-141. 1-51
DPR-141. 1-52
DPR-141. 1-49
DPR-141. 1-40
DPR-141. 1-38
DPR-141. 1-35
DPR-141. 1-31
DPR-141. 1-33
DPR-141. 1-47
DPR-141. 1-48
DPR-141. 1-45
DPR-141. 1-46
DPR-141. 1-43
DPR-141. 1-44
DPR-141. 1-41
DPR-141. 1-42
SV-213. 501-13
SV-213. 501-16
SV-213. 501-17
SV-213. 501-7
SV-213. 501-14
SV-213. 501-12
SV-213. 501-15
SV-213. 501-11
SV-213. 501-10
SV-213. 501-9
SV-213. 501-8
SV-213. 501-19
SV-213. 501-20
SV-213. 501-4
SV-213. 501-5
SV-213. 501-2
FL215.

Servo (1/3) CC-68, HN-227 (1/3), MT-114 (1/2), SE-295, SE-297, SV-213 (1/3)

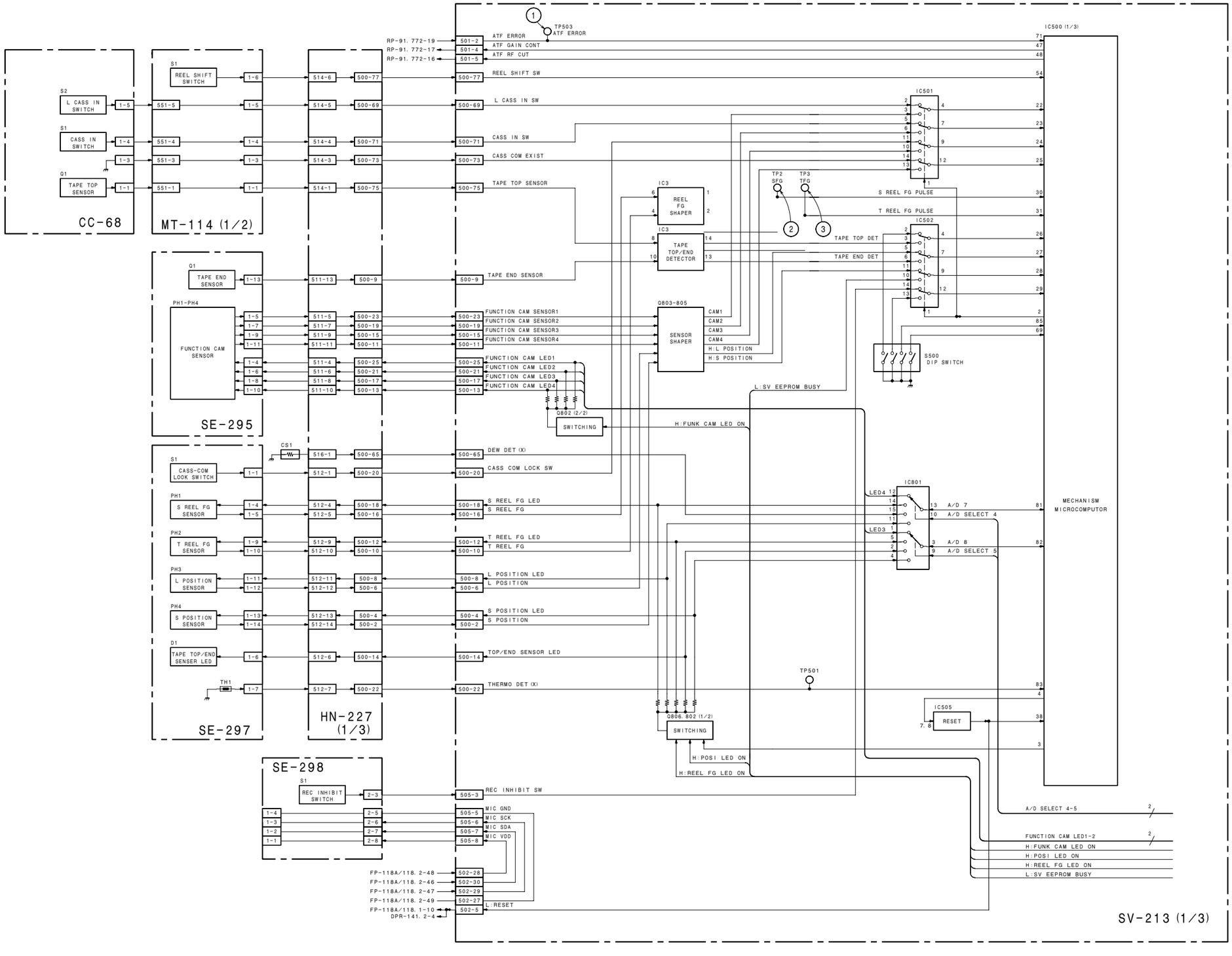

① TP503 PB mode

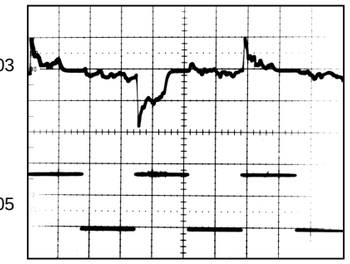

② TP2 REC/PB mode

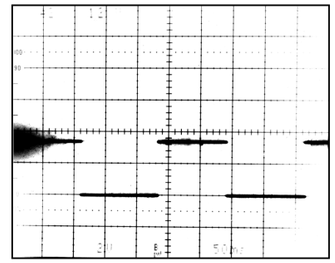

Mini Tape : Tape Top Side

③ TP3 REC/PB mode

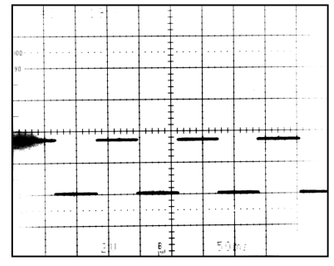

Mini Tape : Tape Top Side

Measurement Condition
Y, R-Y, B-Y : 75% COLOR BARS
SETUP 7.5% (for NTSC)
100% COLOR BARS (for PAL)
REC mode
PB mode : XH5-1A (for NTSC)
75% COLOR BARS
XH5-1AP (for PAL)
100% COLOR BARS

Servo (1/3)
CC-68
HN-227 (1/3)
MT-114 (1/2)
SE-295
SE-297
SV-213 (1/3)

B-DSR500WS-SERVOBLOCK-SM

3-21

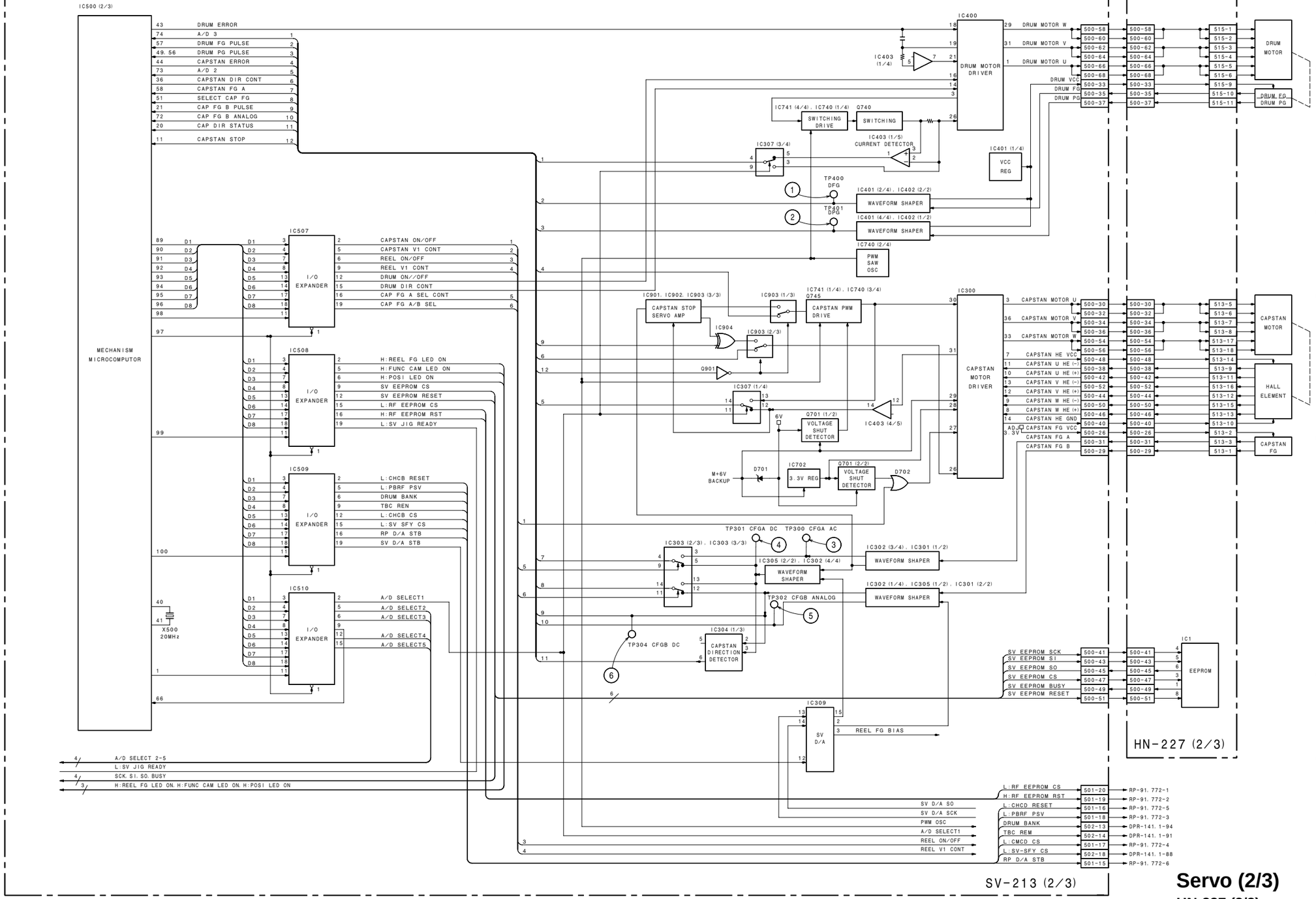

① TP400 EE (STBY-ON) /REC/PB mode
② TP401 EE (STBY-ON) /REC/PB mode

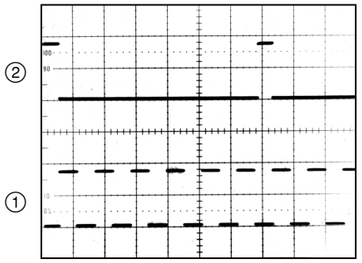

③ TP300 REC/PB mode
④ TP301 REC/PB mode

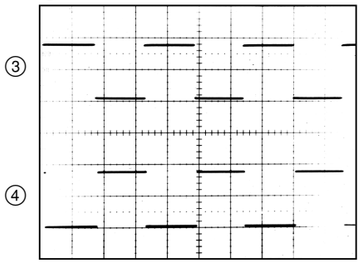

④ TP301 REC/PB mode
⑥ TP304 REC/PB mode

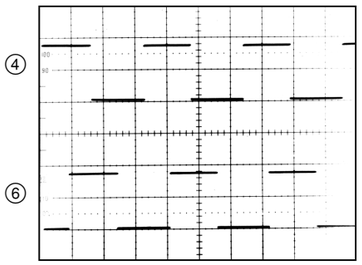

⑤ TP302 REC/PB mode
⑥ TP304 REC/PB mode

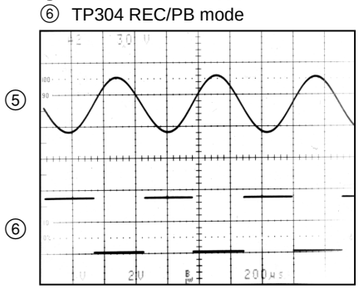

Measurement Condition
Y, R-Y, B-Y : 75% COLOR BARS
SETUP 7.5% (for NTSC)
100% COLOR BARS (for PAL)
EE mode
REC mode
PB mode : XH5-1A (for NTSC)
75% COLOR BARS
XH5-1AP (for PAL)
100% COLOR BARS

Servo (2/3)
HN-227 (2/3)
SV-213 (2/3)
B-DSR500WS-SERVOBLOCK-SM

Servo (3/3) DU-36, HN-227 (3/3), MB-833, MT-114 (2/2), SV-213 (3/3)

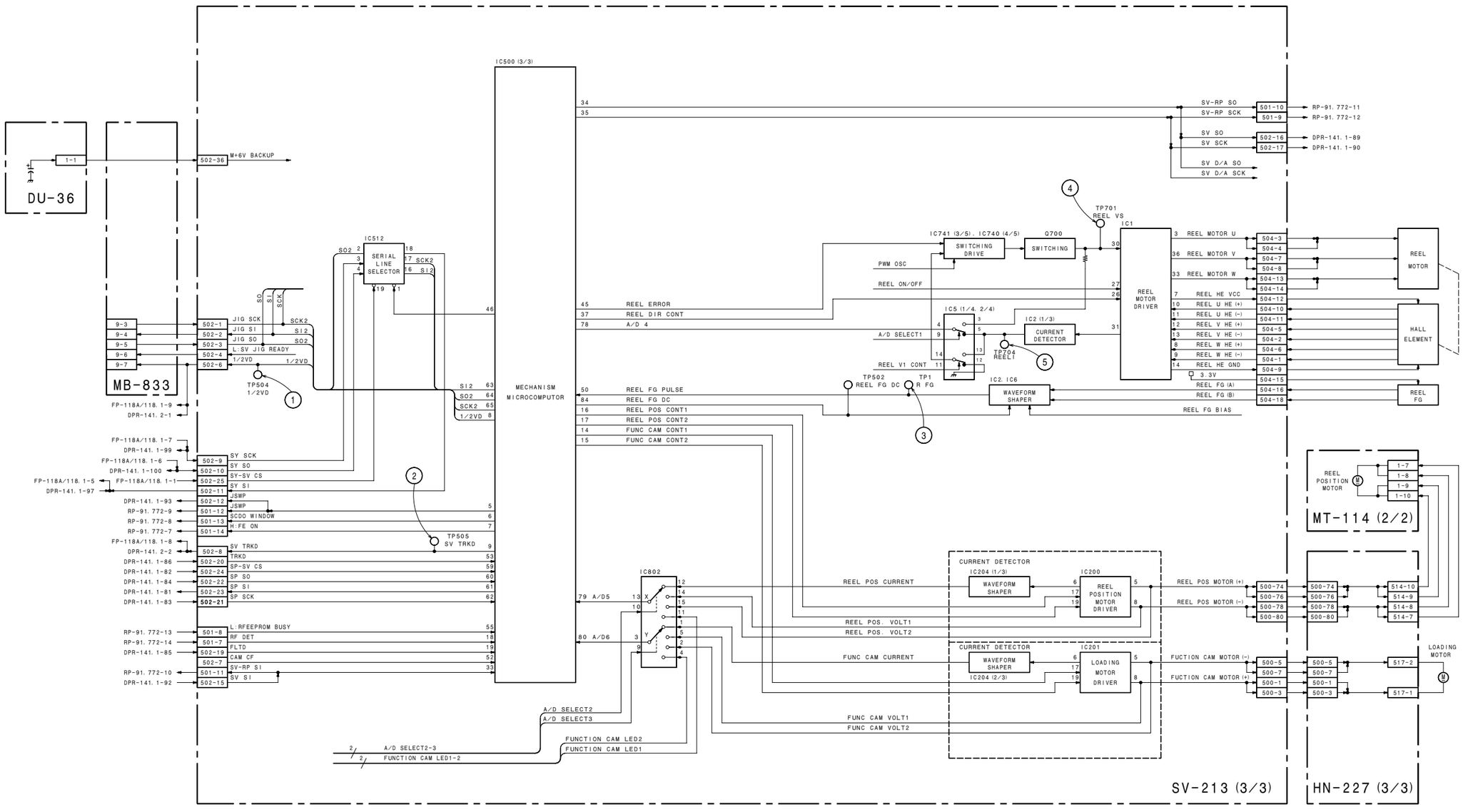

Servo (3/3)

DU-36
HN-227 (3/3)
MB-833
MT-114 (2/2)
SV-213 (3/3)

B-DSR500WS-SERVOBLOCK-SM

<NTSC>

① TP504 EE/REC/PB mode
② TP505 EE/REC/PB mode

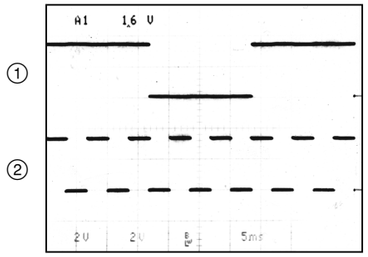

<PAL>

① TP504 EE/REC/PB mode
② TP505 EE/REC/PB mode

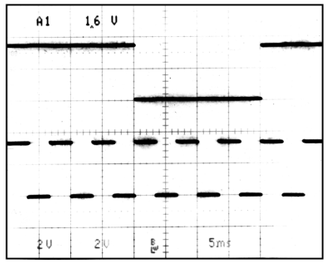

③ TP1 REC/PB mode

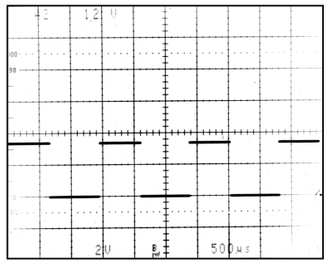

Mini Tape : Tape Top Side

④ TP701

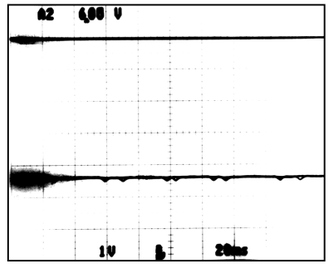

STOP mode
PB mode

⑤ TP704

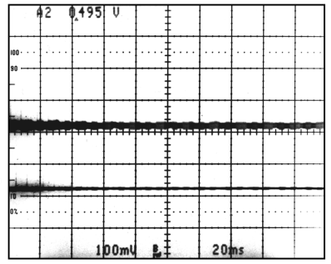

PB mode
STOP mode

Measurement Condition
Y, R-Y, B-Y : 75% COLOR BARS
SETUP 7.5% (for NTSC)
100% COLOR BARS (for PAL)
EE mode
REC mode
PB mode : XH5-1A (for NTSC)
75% COLOR BARS
XH5-1AP (for PAL)
100% COLOR BARS

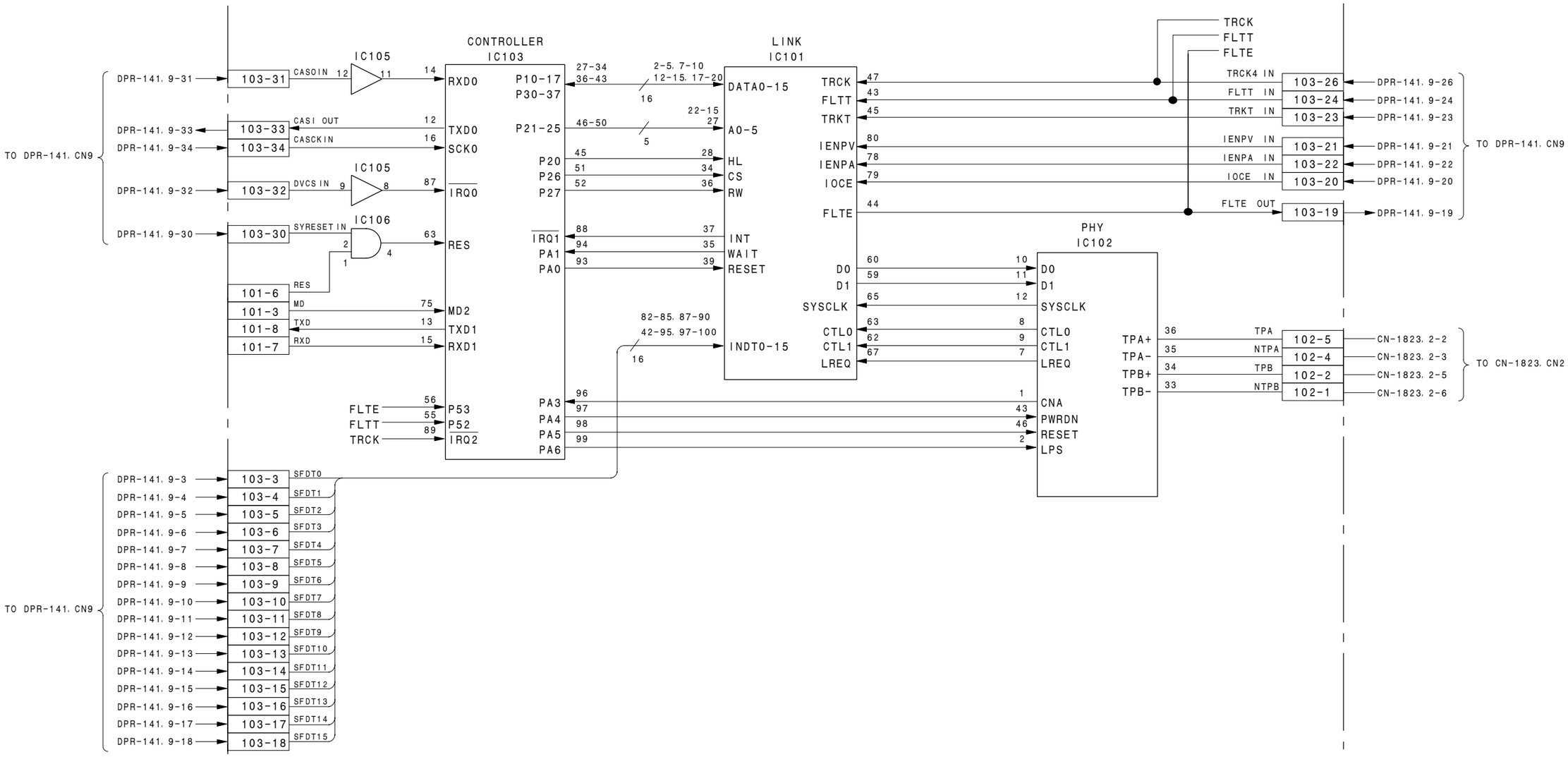
CONTROLLER
IC103
LINK
IC101
PHY
IC102
IC105
IC105
IC106
TO DPR-141, CN9
DPR-141, 9-31
DPR-141, 9-33
DPR-141, 9-34
DPR-141, 9-32
DPR-141, 9-30
103-31
103-33
103-34
103-32
103-30
CASOIN
CASI OUT
CASCKIN
DVCS IN
SYRESET IN
RXD0
TXD0
SCK0
IRQ0
RES
RES
MD
TXD
RXD
101-6
101-3
101-8
101-7
MD2
TXD1
RXD1
P10-17
P30-37
P21-25
P20
P26
P27
IRQ1
PA1
PA0
27-34
36-43
2-5, 7-10
12-15, 17-20
16
22-15
46-50
27
5
45
28
51
34
52
36
88
37
94
35
93
39
DATA0-15
A0-5
HL
CS
RW
INT
WAIT
RESET
INDT0-15
82-85, 87-90
42-95, 97-100
16
TRCK
FLTT
TRKT
IENPV
IENPA
IOCE
FLTE
47
43
45
80
78
79
44
60
59
65
63
62
67
D0
D1
SYSCLK
CTL0
CTL1
LREQ
10
11
12
8
9
7
FLTE
FLTT
TRCK
56
55
89
P53
P52
IRQ2
96
97
98
99
PA3
PA4
PA5
PA6
1
43
46
2
CNA
PWRDN
RESET
LPS
TRCK
FLTT
FLTE
TRCK4 IN
FLTT IN
TRKT IN
IENPV IN
IENPA IN
IOCE IN
FLTE OUT
103-26
103-24
103-23
103-21
103-22
103-20
103-19
DPR-141, 9-26
DPR-141, 9-24
DPR-141, 9-23
DPR-141, 9-21
DPR-141, 9-22
DPR-141, 9-20
DPR-141, 9-19
TO DPR-141, CN9
TPA+
TPA-
TPB+
TPB-
36
35
34
33
TPA
NTPA
TPB
NTPB
102-5
102-4
102-2
102-1
CN-1823, 2-2
CN-1823, 2-3
CN-1823, 2-5
CN-1823, 2-6
TO CN-1823, CN2
TO DPR-141, CN9
DPR-141, 9-3
DPR-141, 9-4
DPR-141, 9-5
DPR-141, 9-6
DPR-141, 9-7
DPR-141, 9-8
DPR-141, 9-9
DPR-141, 9-10
DPR-141, 9-11
DPR-141, 9-12
DPR-141, 9-13
DPR-141, 9-14
DPR-141, 9-15
DPR-141, 9-16
DPR-141, 9-17
DPR-141, 9-18
103-3
103-4
103-5
103-6
103-7
103-8
103-9
103-10
103-11
103-12
103-13
103-14
103-15
103-16
103-17
103-18
SFDT0
SFDT1
SFDT2
SFDT3
SFDT4
SFDT5
SFDT6
SFDT7
SFDT8
SFDT9
SFDT10
SFDT11
SFDT12
SFDT13
SFDT14
SFDT15

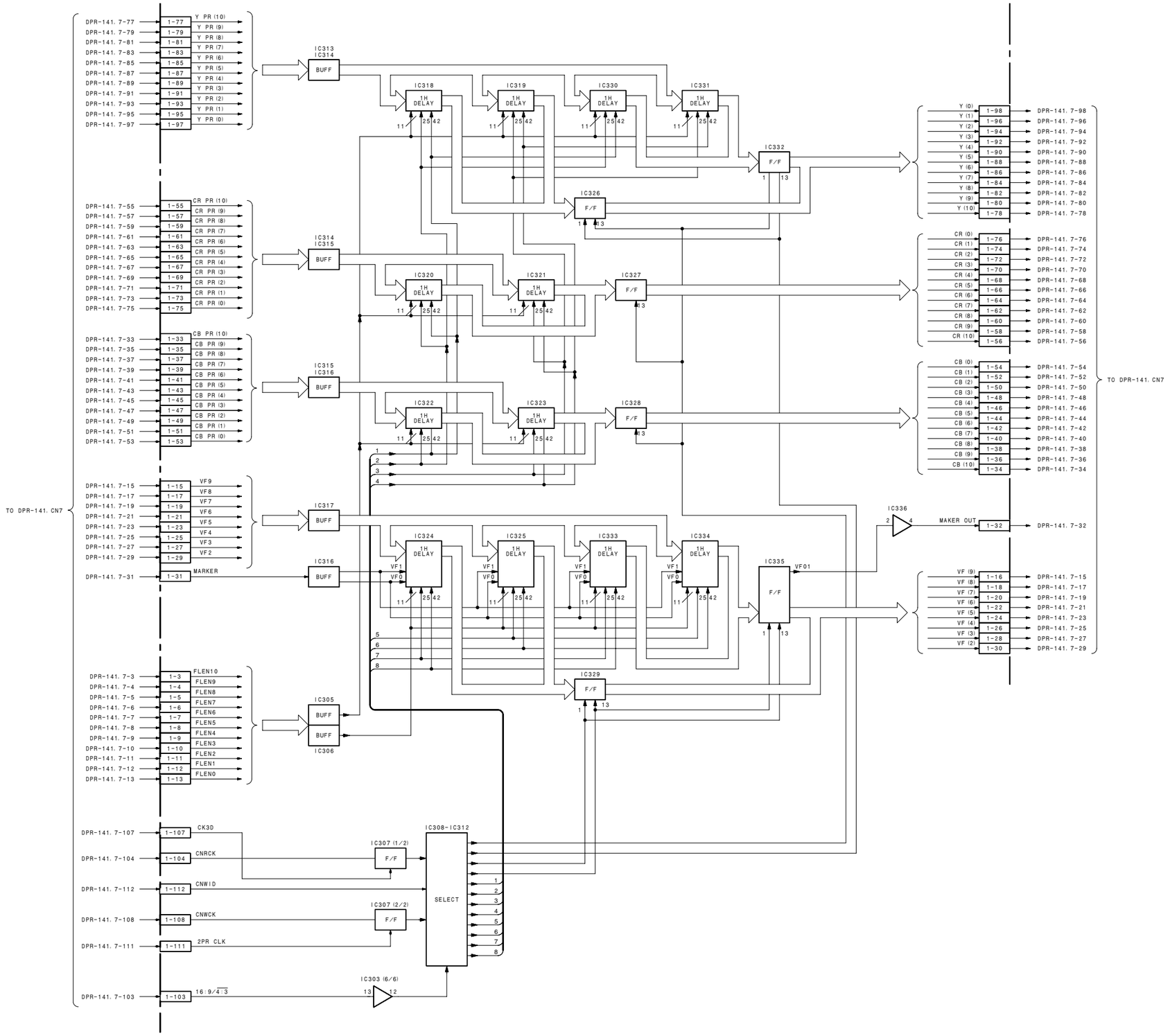

VE-44

B-DSR500WS-VE44BLOCK-SM

Section 4
Schematic Diagrams and Frame Wiring

Index

Board	Page	Remarks
AA-104	4-73	
AT-127	4-46	DSR-500WS/500WSP
AT-150B	4-42	DSR-570WS/570WSP
CC-68	4-72	
CN-1519	4-83	DSR-500WS/500WSP
CN-1811	4-49	
CN-1823	4-84	
CN-1864	4-74	
CN-1865	4-74	
CN-1866	4-73	
CN-1867	4-73	
CN-1873	4-83	
CN-1874	4-83	
CN-2277	4-80	DSR-570WS/570WSP
CP-315	4-81	DSR-500WS/500WSP
CP-373	4-75	DSR-570WS/570WSP
DPR-141B/141	4-16	
DU-36	4-90	
DV-21C/21	4-84	
ES-26	4-34	
FP-118A/118	4-50	
FP-99	4-59	
GCN-16	4-59	
HN-227	4-72	
KY-405	4-50	
LE-221	4-73	
MB-833	4-88	
MT-114	4-72	
PA-219 (B)	4-5	DSR-500WS/500WSP
PA-220 (G)	4-5	DSR-500WS/500WSP
PA-221 (R)	4-5	DSR-500WS/500WSP
PA-254 (B)	4-4	
PA-255 (G)	4-4	
PA-256 (R)	4-4	
PS-570	4-83	
PSW-71	4-74	
RP-91	4-60	
SE-295	4-72	
SE-297	4-72	
SE-298	4-64	
SE-511	4-42	
SV-213	4-64	
SW-18	4-73	
SW-19	4-74	
SW-929	4-59	
TG-204	4-6	
VA-190	4-10	
VE-44	4-86	
Frame Wiring	4-3	

4-1

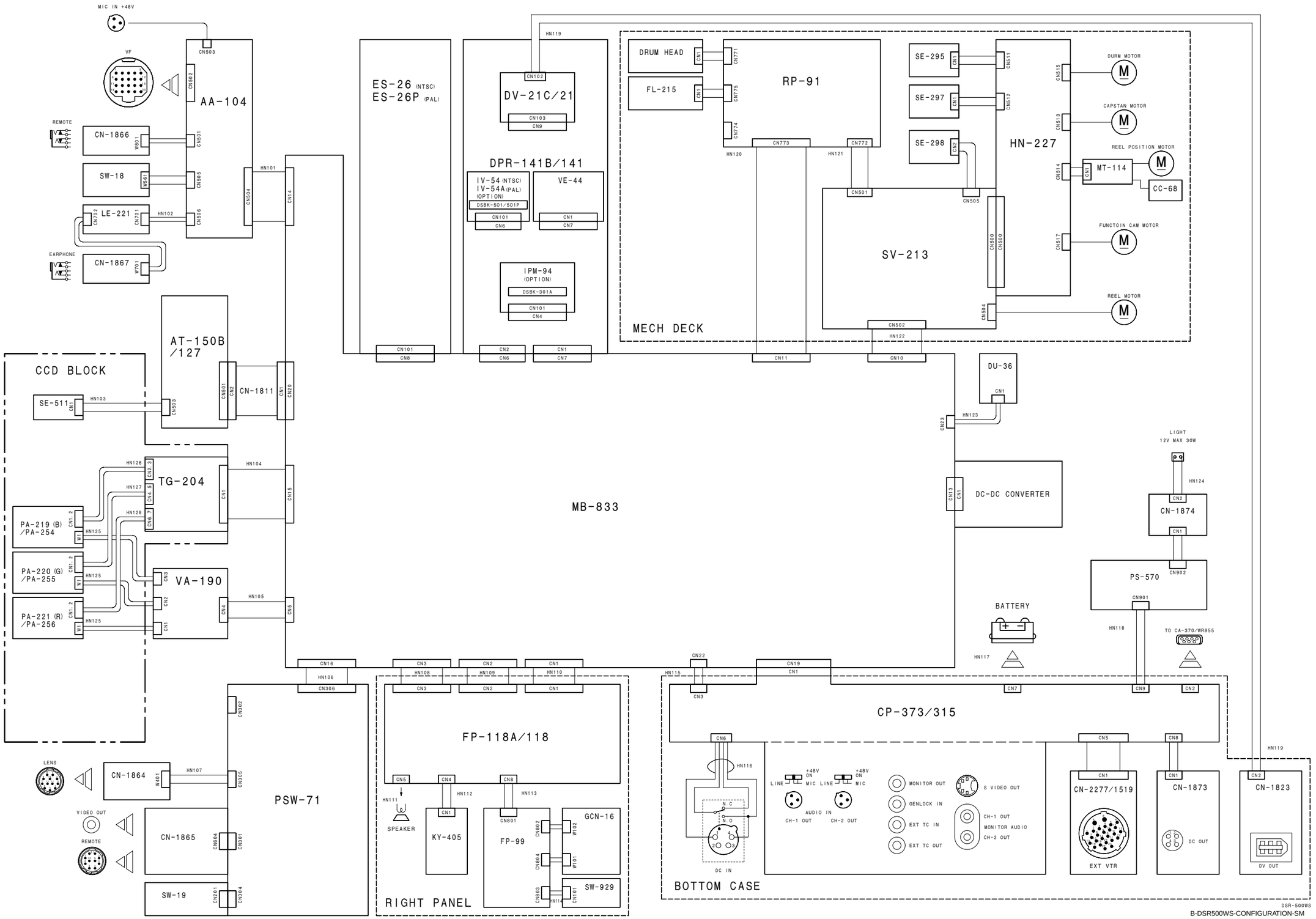
MIC IN +48V
VF
CN503
CN502
AA-104
REMOTE
CN-1866
W801
CN501
SW-18
W651
CN505
LE-221
CN702
CN701
HN102
CN506
EARPHONE
CN-1867
W701
HN101
CN504
CN14
ES-26 (NTSC)
ES-26P (PAL)
HN119
CN102
DV-21C/21
CN103
CN9
DPR-141B/141
IV-54 (NTSC)
IV-54A (PAL)
(OPTION)
DSBK-501/501P
CN101
CN6
VE-44
CN1
CN7
IPM-94
(OPTION)
DSBK-301A
CN101
CN4
CN101
CN8
CN2
CN6
CN1
CN7
DRUM HEAD
CN1
FL-215
CN1
CN771
CN775
CN774
RP-91
HN120
CN773
CN772
HN121
CN11
CN10
SE-295
CN1
SE-297
CN1
SE-298
CN2
CN511
CN512
CN501
CN505
HN-227
SV-213
CN500
CN500
CN502
HN122
CN504
CN515
CN513
CN514
CN517
DURM MOTOR
CAPSTAN MOTOR
REEL POSITION MOTOR
MT-114
CC-68
FUNCTOIN CAM MOTOR
REEL MOTOR
MECH DECK
DU-36
CN1
HN123
CN23
LIGHT
12V MAX 30W
HN124
CN-1874
CN2
CN1
CN902
PS-570
CN901
HN118
TO CA-370/WR855
BATTERY
HN117
DC-DC CONVERTER
CN13
CN1
MB-833
AT-150B
/127
CCD BLOCK
SE-511
CN1
HN103
CN603
CN601
CN2
CN-1811
CN1
CN20
HN126
HN127
HN128
TG-204
CN2, 3
CN4, 5
CN6, 7
CN1
HN104
CN15
PA-219 (B)
/PA-254
CN1, 2
W1
HN125
PA-220 (G)
/PA-255
PA-221 (R)
/PA-256
VA-190
CN3
CN2
CN1
CN4
HN105
CN5
CN16
HN106
CN306
CN302
CN305
CN301
CN304
CN201
PSW-71
LENS
CN-1864
W401
HN107
VIDEO OUT
REMOTE
CN-1865
CN604
SW-19
CN3
CN2
CN1
HN108
HN109
HN110
FP-118A/118
CN5
CN4
CN8
HN111
SPEAKER
HN112
KY-405
HN113
FP-99
CN802
CN804
CN803
HN114
GCN-16
W102
W101
SW-929
CN101
RIGHT PANEL
CN22
HN115
CN19
CN1
CN3
CN7
CN9
CN2
CP-373/315
CN6
HN116
N.C
COM
N.O
DC IN
+48V ON
LINE
MIC
AUDIO IN
CH-1 OUT
CH-2 OUT
MONITOR OUT
GENLOCK IN
EXT TC IN
EXT TC OUT
S VIDEO OUT
CH-1 OUT
MONITOR AUDIO
CH-2 OUT
CN5
CN8
CN1
CN-2277/1519
EXT VTR
CN-1873
DC OUT
HN119
CN2
CN-1823
DV OUT
BOTTOM CASE
DSR-500WS
B-DSR500WS-CONFIGURATION-SM

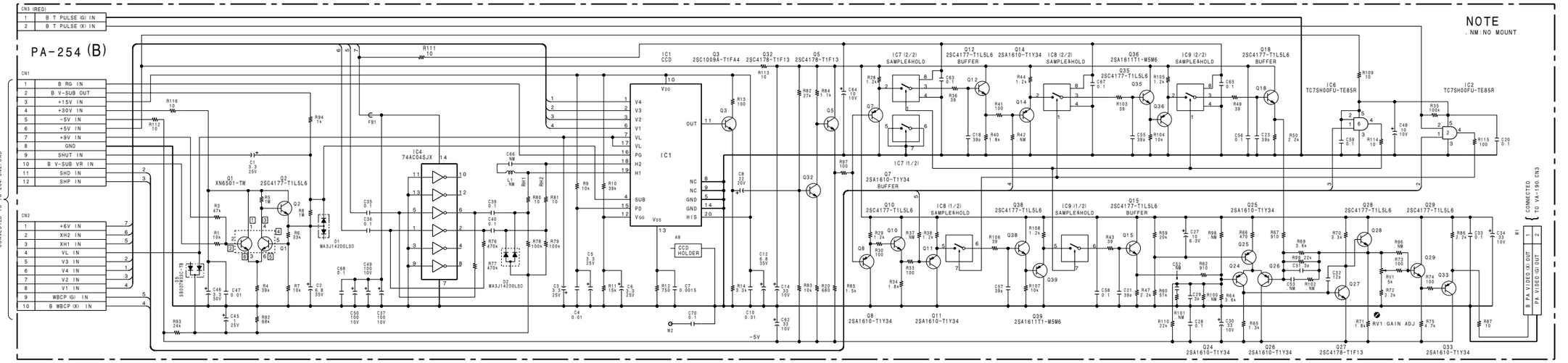

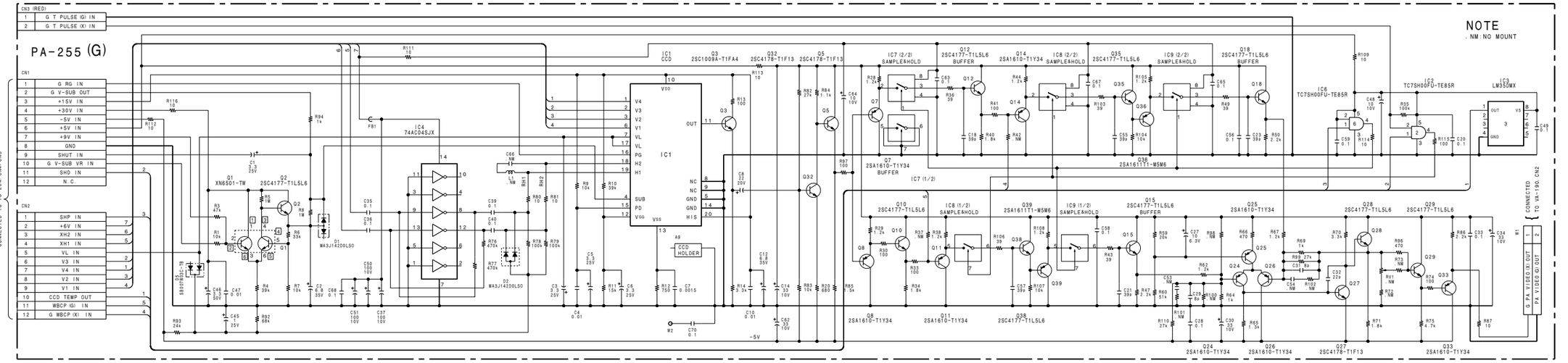

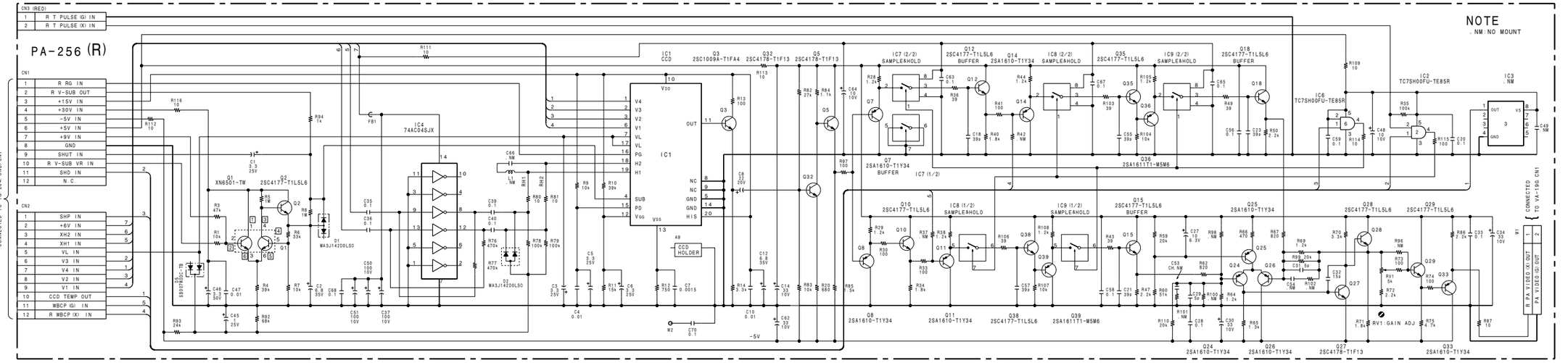

PA-254 (B)
BOARD NO. 1-677-417-11

PA-255 (G)
BOARD NO. 1-677-418-11

PA-256 (R)
BOARD NO. 1-677-419-11
B-DXCD35WS-PA.M

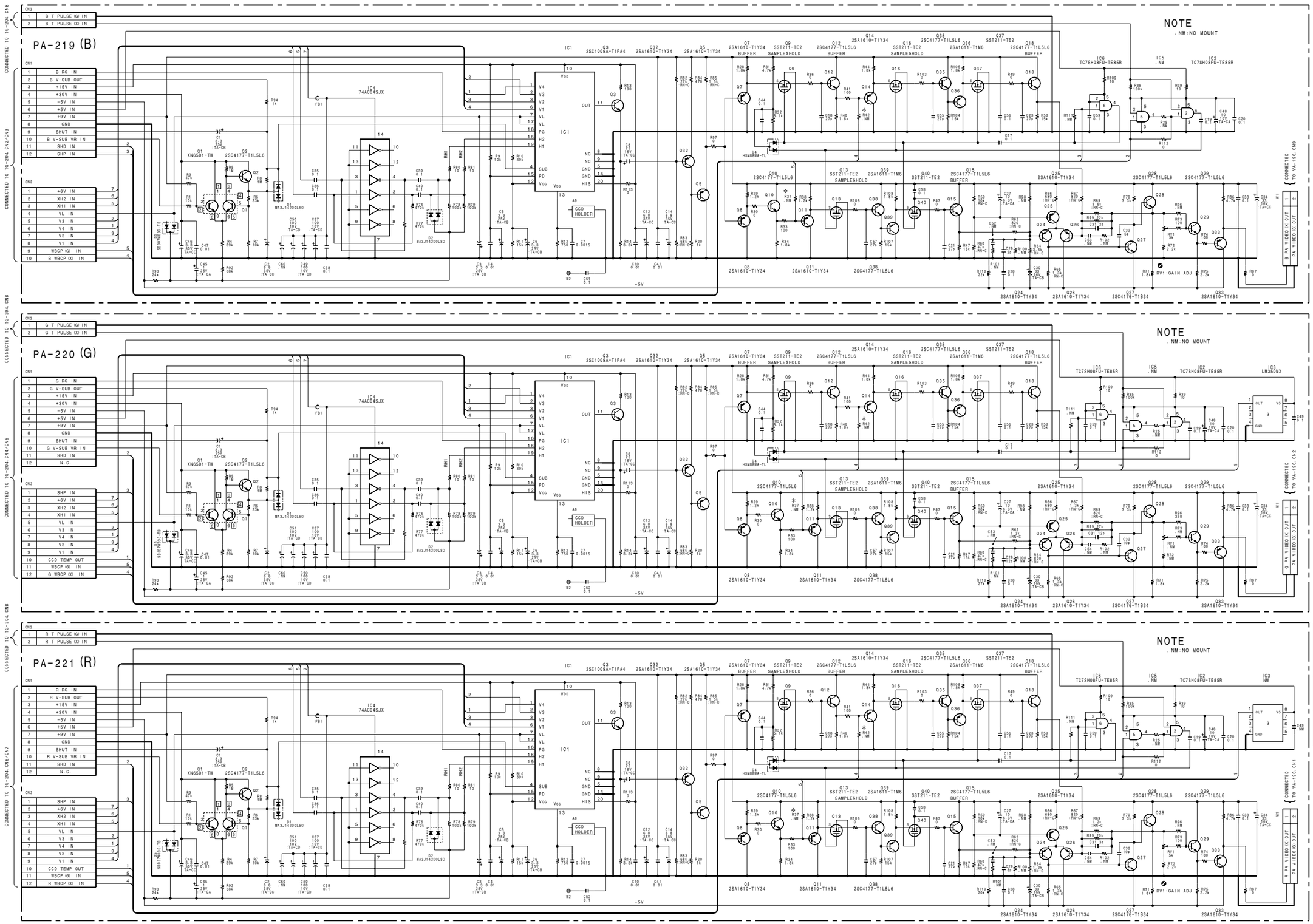

NOTE
*

BOARD NAME	REF NO.	CHANGE INFORMATION	SERIAL NO.
PA-219	R37, R42	3k → DELETE	(UC) 12006 - (J) 32001
PA-220	R37, R42	3k → DELETE	
PA-221	R37, R42	3k → DELETE	

PA-219 (B)
BOARD NO. 1-668-602-11
FOR DSR-500WS/500WSP

PA-220 (G)
BOARD NO. 1-668-603-11
FOR DSR-500WS/500WSP

PA-221 (R)
BOARD NO. 1-668-604-11
FOR DSR-500WS/500WSP

B-DSR500WS-PA-SM

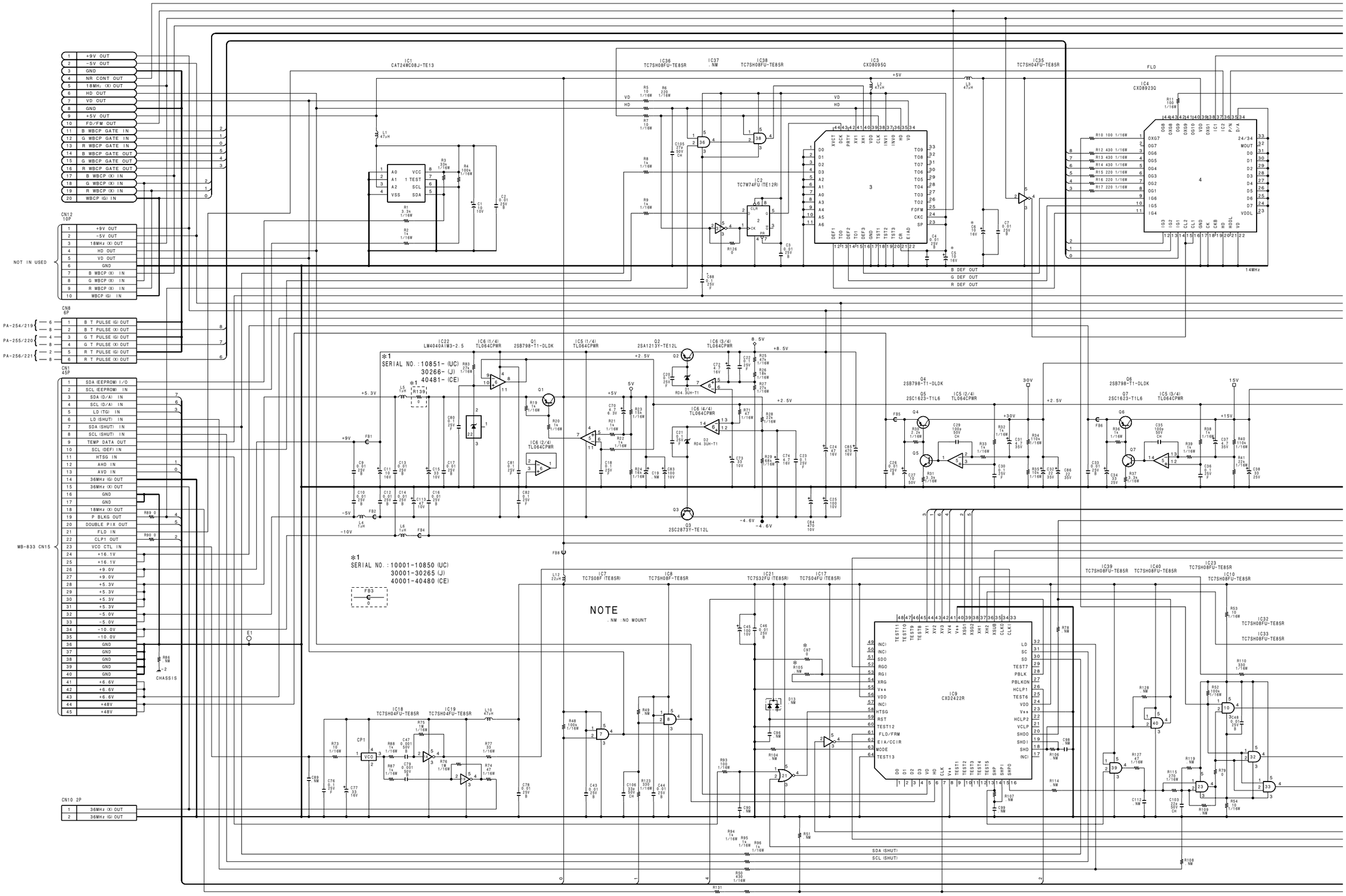
CN12 10P
NOT IN USED
CN8 6P
PA-254/219
PA-255/220
PA-256/221
CN1 45P
MB-833 CN15
CN10 2P
CHASSIS
IC1 CAT24WC08J-TE13
IC36 TC7SH08FU-TE85R
IC37 NM
IC38 TC7SH08FU-TE85R
IC3 CXD8095Q
IC35 TC7SH04FU-TE85R
IC4 CXD8923Q
FLD
IC2 TC7W74FU(TE12R)
14MHz
B DEF OUT
G DEF OUT
R DEF OUT
IC22 LM4040AIM3-2.5
IC6 (1/4) TL064CPWR
Q1 2SB798-T1-DLDK
IC5 (1/4) TL064CPWR
Q2 2SA1213Y-TE12L
IC6 (3/4) TL064CPWR
IC6 (4/4) TL064CPWR
IC6 (2/4) TL064CPWR
Q3 2SC2873Y-TE12L
Q4 2SB798-T1-DLDK
Q5 2SC1623-T1L6
IC5 (2/4) TL064CPWR
Q6 2SB798-T1-DLDK
Q7 2SC1623-T1L6
IC5 (3/4) TL064CPWR
*1
SERIAL NO.:10851-(UC)
30266-(J)
40481-(CE)
*1
SERIAL NO.:10001-10850 (UC)
30001-30265 (J)
40001-40480 (CE)
NOTE
:NM :NO MOUNT
IC7 TC7S08F(TE85R)
IC8 TC7SH08F-TE85R
IC21 TC7S32FU(TE85R)
IC17 TC7S04FU(TE85R)
IC39 TC7SH08FU-TE85R
IC40 TC7SH08FU-TE85R
IC23 TC7SH08FU-TE85R
IC10 TC7SH08FU-TE85R
IC32 TC7SH08FU-TE85R
IC33 TC7SH08FU-TE85R
IC18 TC7SH04FU-TE85R
IC19 TC7SH04FU-TE85R
IC9 CXD2422R
SDA (SHUT)
SCL (SHUT)

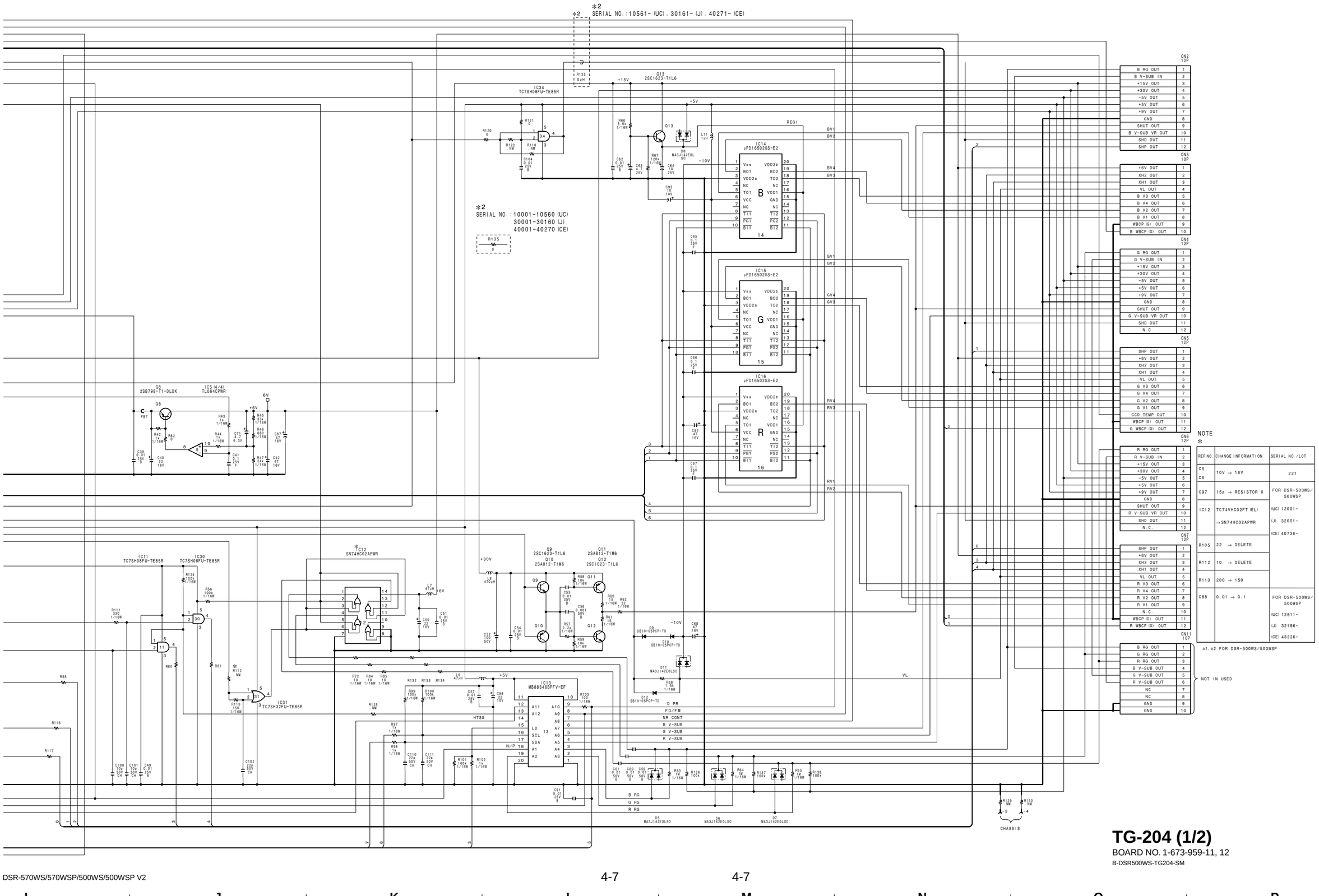

TG-204 (1/2)

BOARD NO. 1-673-959-11, 12

B-DSR500WS-TG204-SM

TG-204 (2/2)

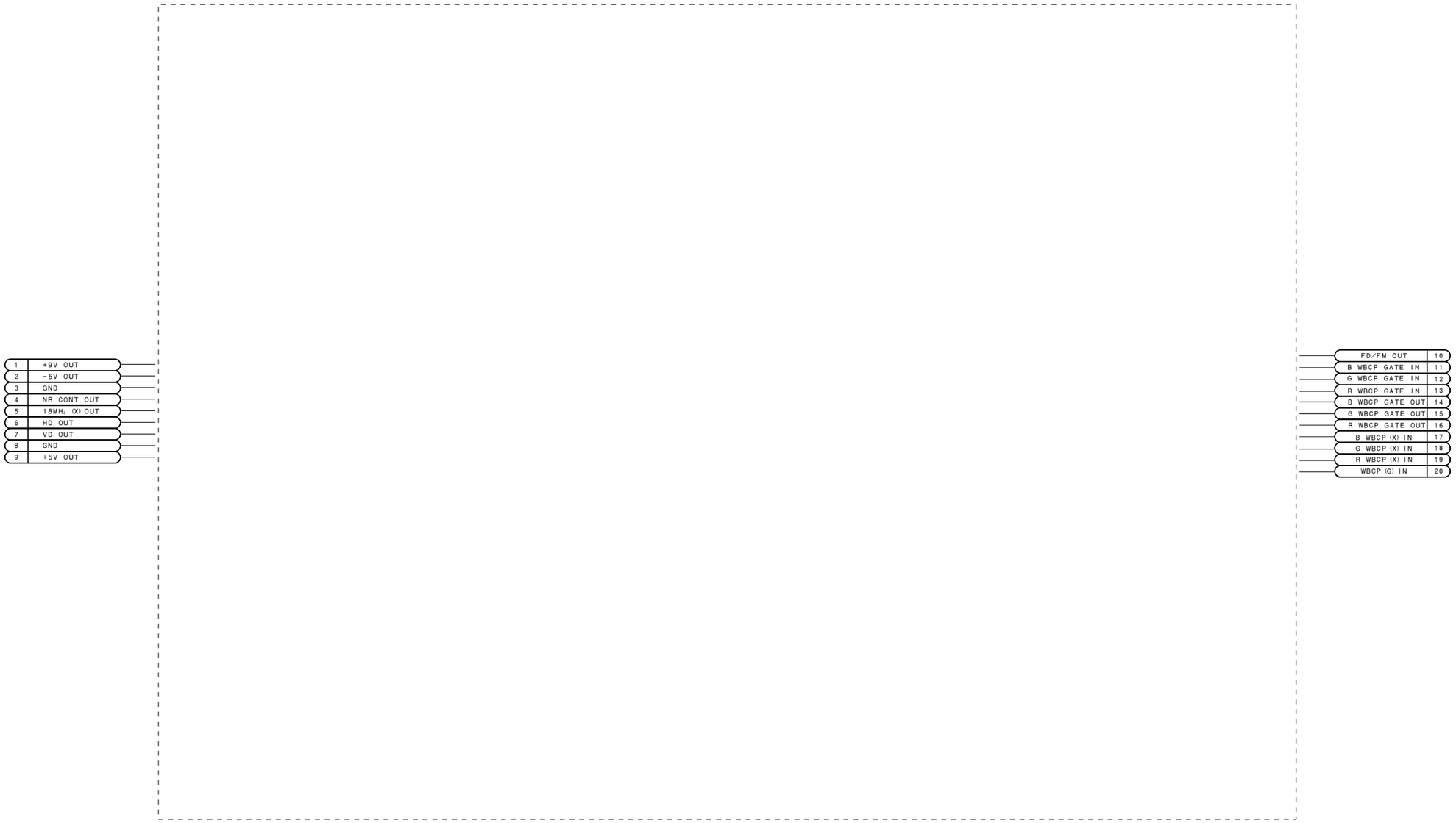

TG-204 (2/2)
BOARD NO. 1-673-959-11, 12
B-DSR500WS-TG204-SM

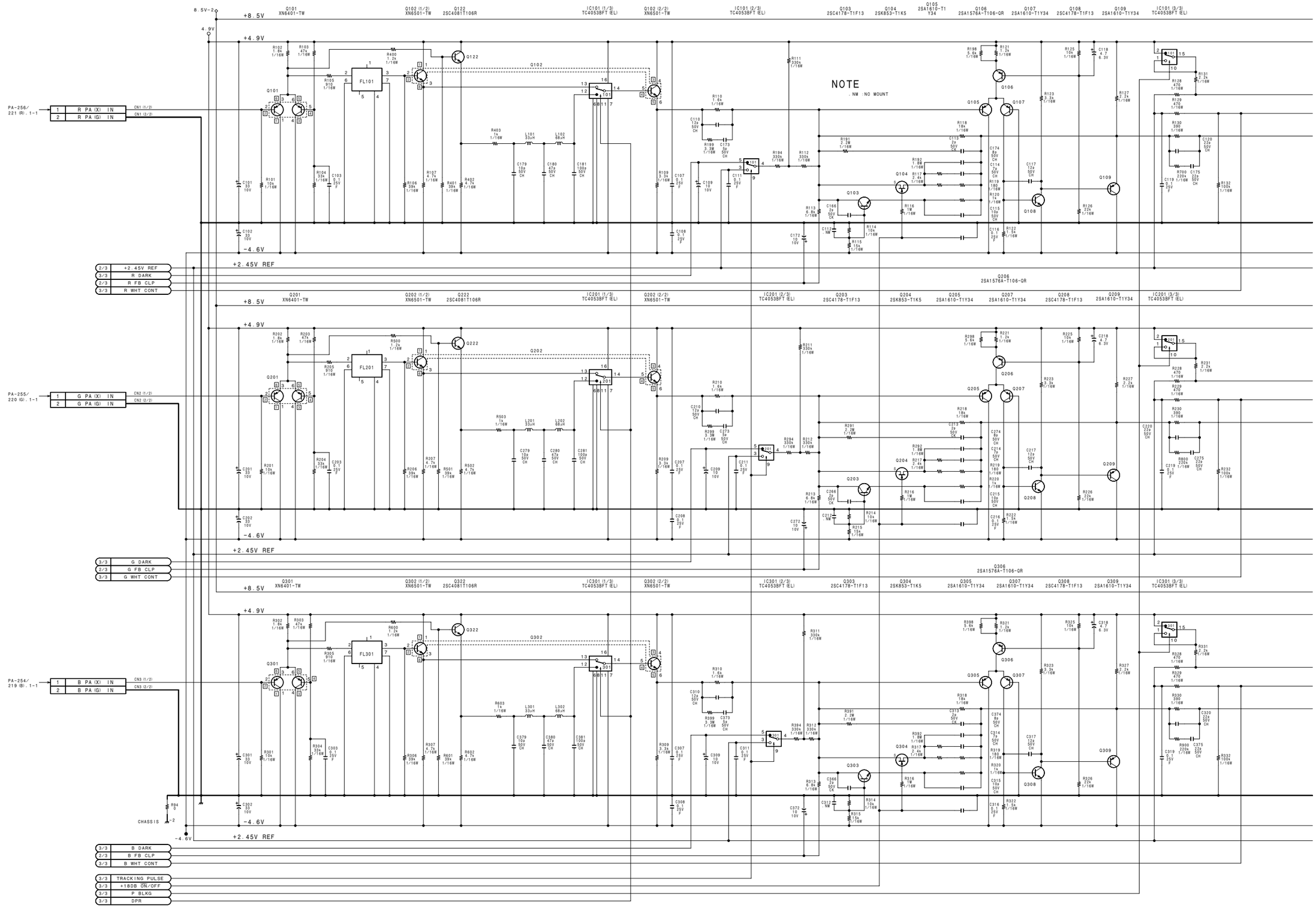
NOTE
. NM : NO MOUNT
PA-256/ 221 (R) . 1-1
PA-255/ 220 (G) . 1-1
PA-254/ 219 (B) . 1-1
R PA (X) IN
R PA (G) IN
G PA (X) IN
G PA (G) IN
B PA (X) IN
B PA (G) IN
+2.45V REF
R DARK
R FB CLP
R WHT CONT
G DARK
G FB CLP
G WHT CONT
B DARK
B FB CLP
B WHT CONT
TRACKING PULSE
+18DB ON/OFF
P BLKG
DPR
CHASSIS
+8.5V
+4.9V
-4.6V
Q101 XN6401-TW
Q102 (1/2) XN6501-TW
Q122 2SC4081T106R
IC101 (1/3) TC4053BFT (EL)
Q102 (2/2) XN6501-TW
IC101 (2/3) TC4053BFT (EL)
Q103 2SC4178-T1F13
Q104 2SK853-T1K5
Q105 2SA1610-T1 Y34
Q106 2SA1576A-T106-QR
Q107 2SA1610-T1Y34
Q108 2SC4178-T1F13
Q109 2SA1610-T1Y34
IC101 (3/3) TC4053BFT (EL)
Q201 XN6401-TW
Q202 (1/2) XN6501-TW
Q222 2SC4081T106R
IC201 (1/3) TC4053BFT (EL)
Q202 (2/2) XN6501-TW
IC201 (2/3) TC4053BFT (EL)
Q203 2SC4178-T1F13
Q204 2SK853-T1K5
Q205 2SA1610-T1Y34
Q207 2SA1610-T1Y34
Q208 2SC4178-T1F13
Q209 2SA1610-T1Y34
IC201 (3/3) TC4053BFT (EL)
Q301 XN6401-TW
Q302 (1/2) XN6501-TW
Q322 2SC4081T106R
IC301 (1/3) TC4053BFT (EL)
Q302 (2/2) XN6501-TW
IC301 (2/3) TC4053BFT (EL)
Q303 2SC4178-T1F13
Q304 2SK853-T1K5
Q305 2SA1610-T1Y34
Q307 2SA1610-T1Y34
Q308 2SC4178-T1F13
Q309 2SA1610-T1Y34
IC301 (3/3) TC4053BFT (EL)
Q206 2SA1576A-T106-QR
Q306 2SA1576A-T106-QR

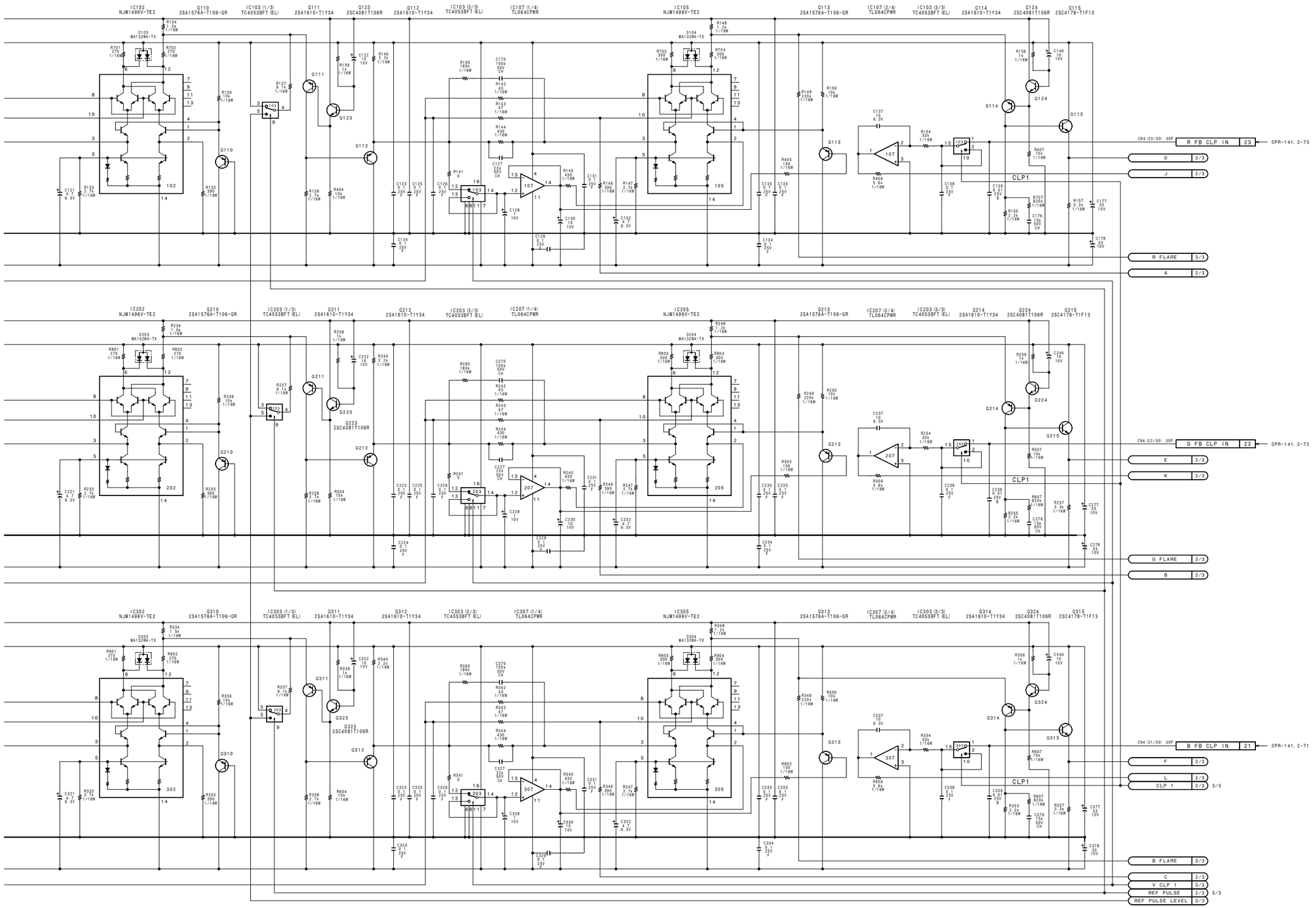

VA-190 (1/3)

BOARD NO. 1-673-963-11

B-DSR500WS-VA190-SM

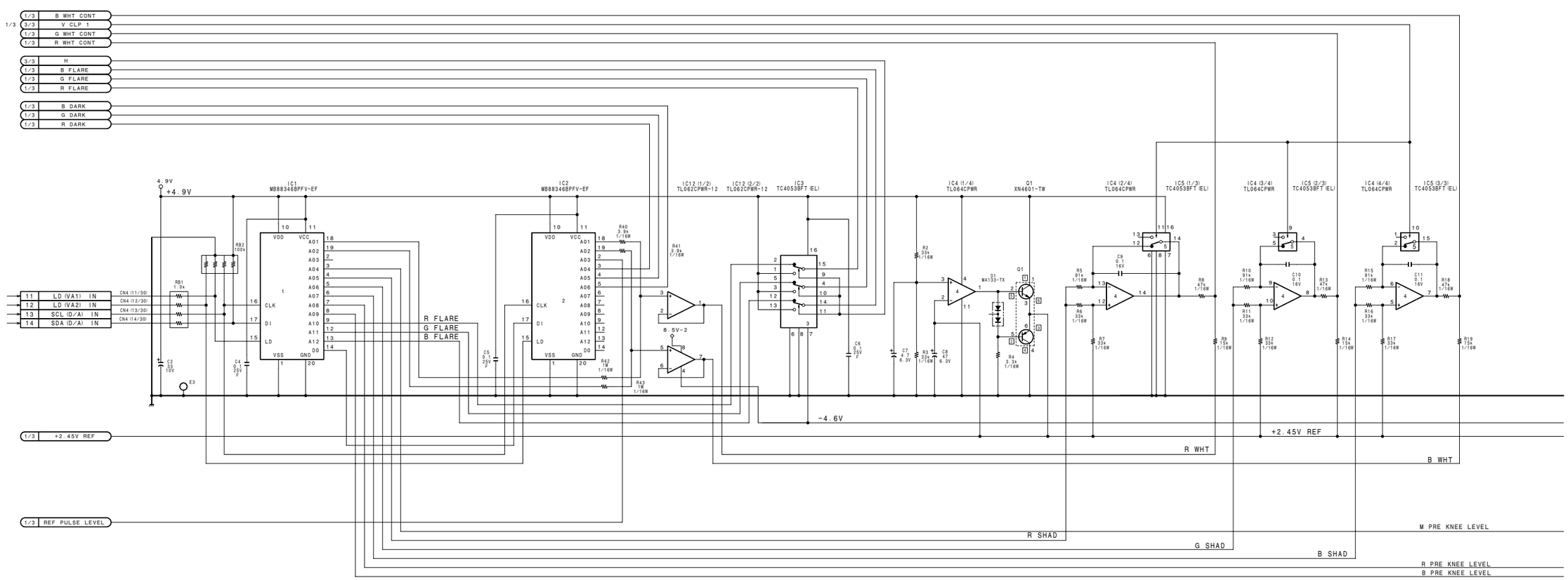
1/3 B WHT CONT
3/3 V CLP 1
1/3 G WHT CONT
1/3 R WHT CONT
3/3 H
1/3 B FLARE
1/3 G FLARE
1/3 R FLARE
1/3 B DARK
1/3 G DARK
1/3 R DARK
11 LD (VA1) IN
12 LD (VA2) IN
13 SCL (D/A) IN
14 SDA (D/A) IN
1/3 +2.45V REF
1/3 REF PULSE LEVEL
4.9V
+4.9V
IC1 M88834GBPFV-EF
IC2 M88834GBPFV-EF
IC12 (1/2) TL062CPWR-12
IC12 (2/2) TL062CPWR-12
IC3 TC4053BFT (EL)
IC4 (1/4) TL064CPWR
Q1 XN4601-TW
IC4 (2/4) TL064CPWR
IC5 (1/3) TC4053BFT (EL)
IC4 (3/4) TL064CPWR
IC5 (2/3) TC4053BFT (EL)
IC4 (4/4) TL064CPWR
IC5 (3/3) TC4053BFT (EL)
R FLARE
G FLARE
B FLARE
8.5V-2
-4.6V
+2.45V REF
R WHT
B WHT
R SHAD
G SHAD
B SHAD
M PRE KNEE LEVEL
R PRE KNEE LEVEL
B PRE KNEE LEVEL

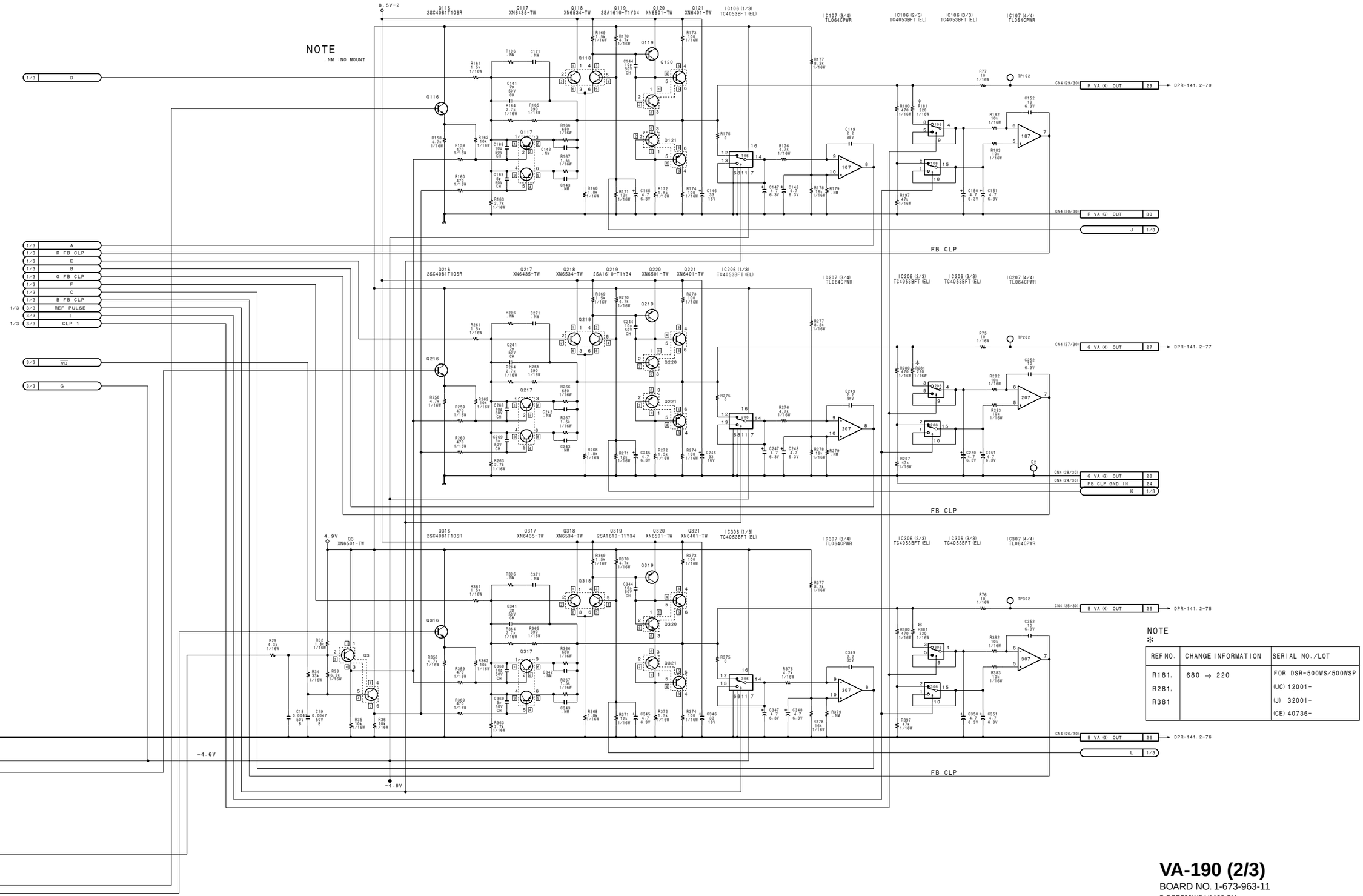

VA-190 (2/3)

BOARD NO. 1-673-963-11

B-DSR500WS-VA190-SM

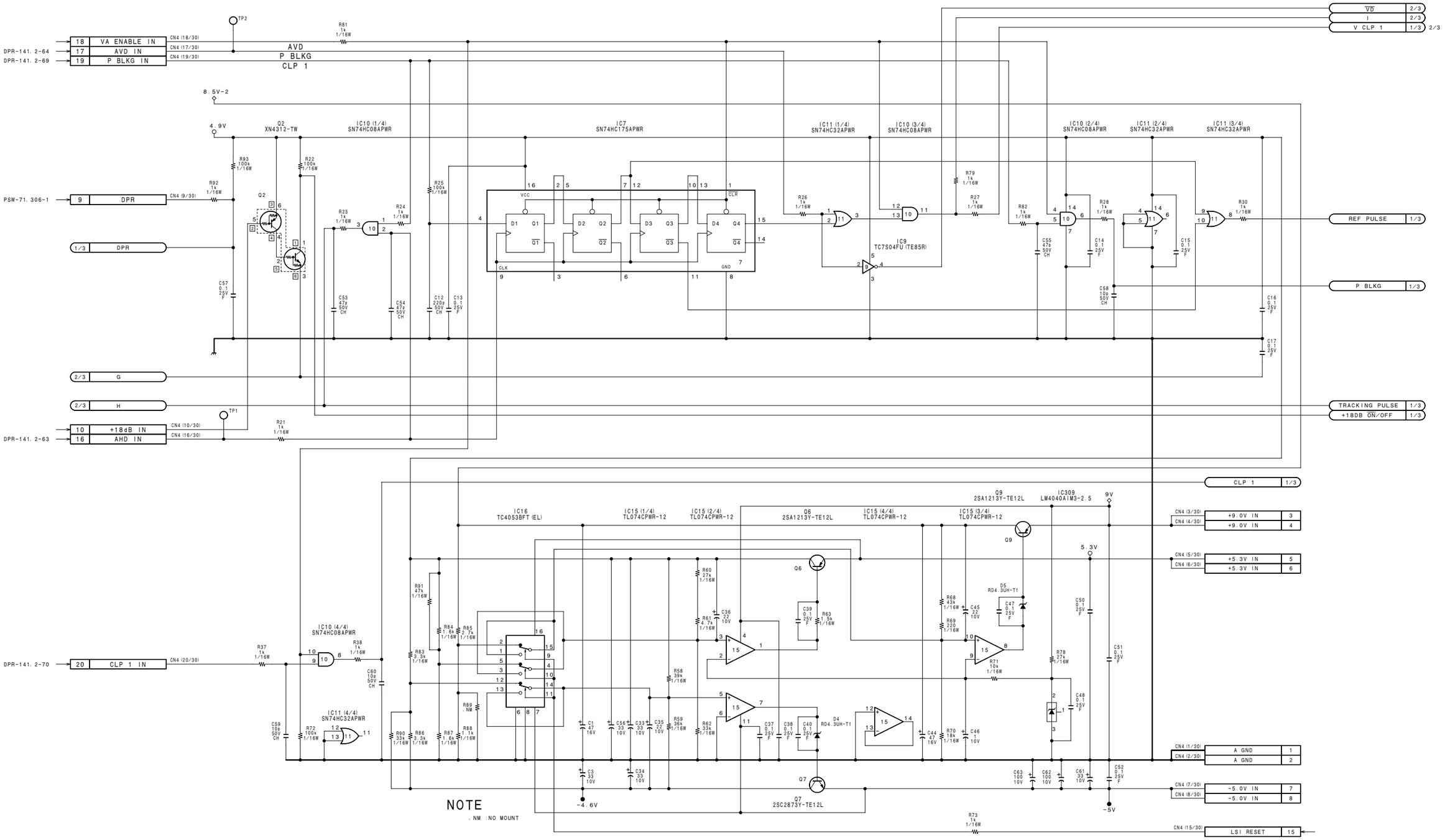

VA-190 (3/3)

BOARD NO. 1-673-963-11

B-DSR500WS-VA190-SM

DPR-141B/141 (1/9)
SUFFIX: -13, -14

This circuit diagram is common to DSR-370/370P/300A/300AP.

# :NOTE			
	570WS/500WS	370/300A	
CN7	1-208-178555121	NM	
R132	NM	10 1/16W 0.5%	
R133	10 1/16W 5%	NM	
R135	NM	0 --- ---	
R136	0 --- ---	NM	

* :NOTE			
REF. NO.	SUFFIX-13	SUFFIX-14	
C123	10uF 10V	10uF 16V	

DPR-141B/141 (2/9)
SUFFIX: -13, -14

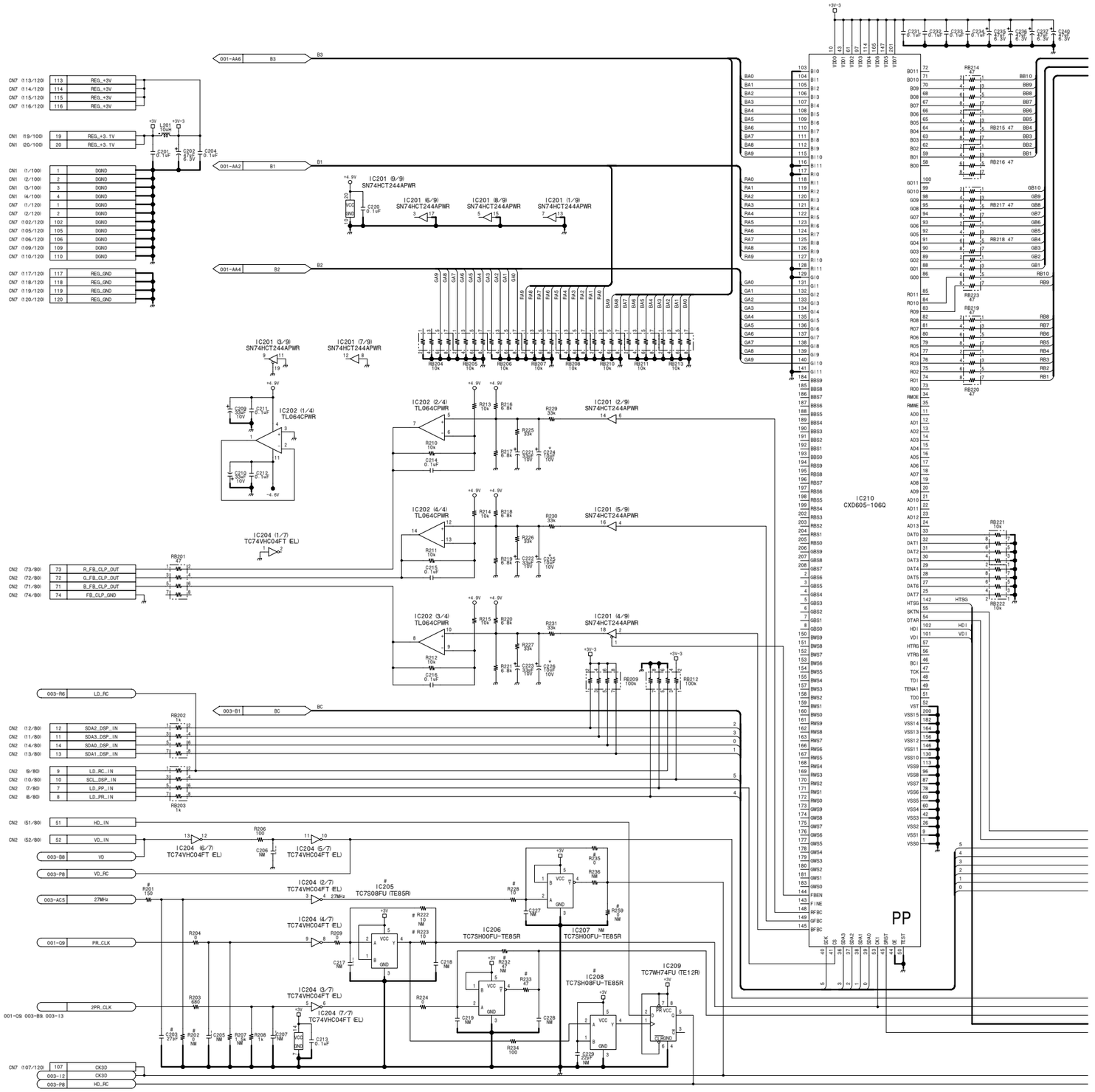

4-18 (b)

DPR-141B/141 (2/9)
SUFFIX: -13, -14

This circuit diagram is common to DSR-370/370P/300A/300AP.

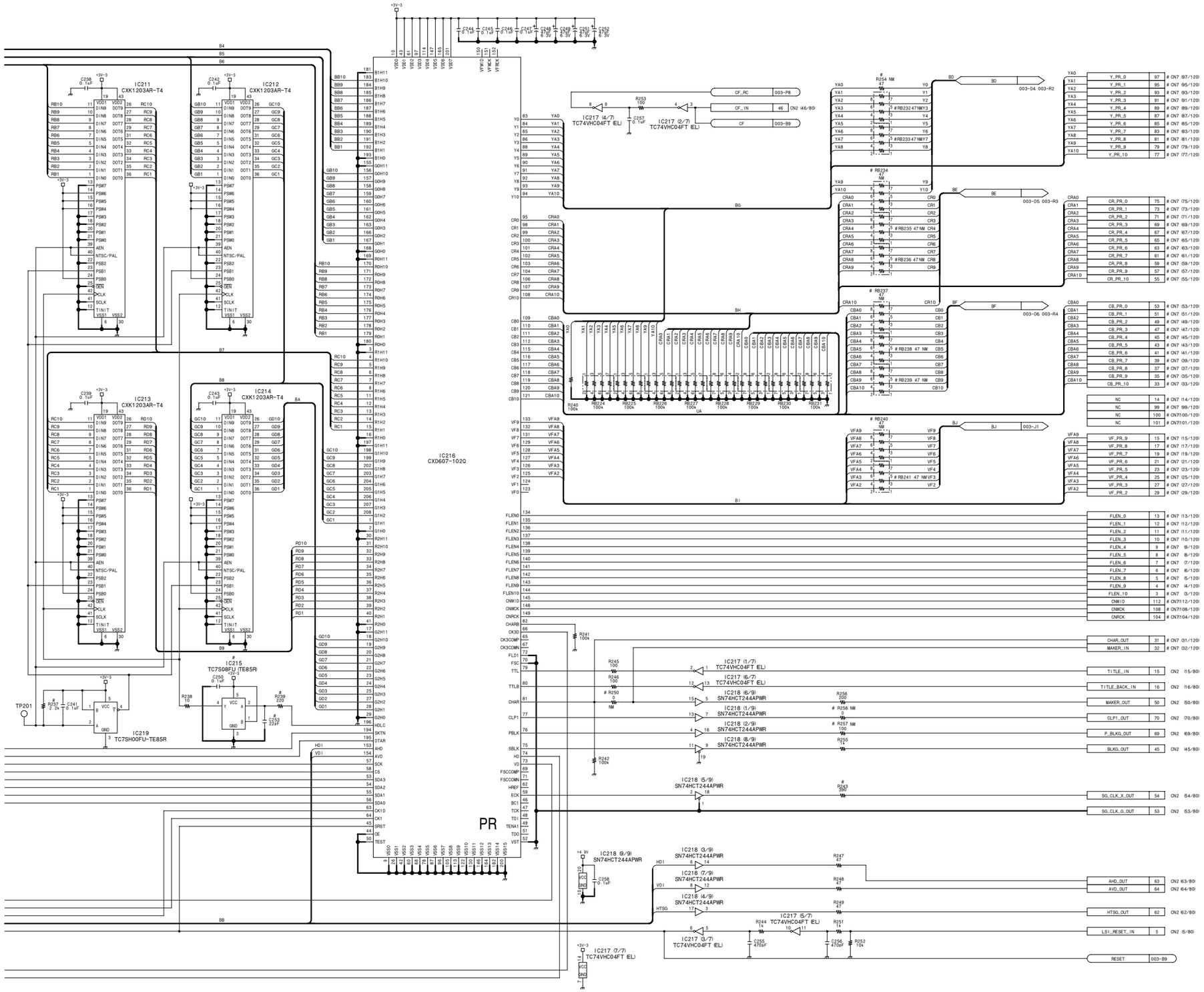

#:NOTE	570WS/500WS	370/300A
C203	47uF 50V CH	NM
C253	82pF 50V CH	NM
CN7	12P 178555121	NM
IC205	TC7S08FU IT	TC7S00FU IT
IC206	TC7SH00FU-	NM
IC208	TC7SH08FU-	TC7S00FU IT
IC215	TC7S08FU IT	TC7SH08FU-
R201	150 1/10W 0.5%	NM
R202	NM	0 --- ---
R222	NM	10 1/16W 5%
R223	10 1/16W 5%	NM
R228	10 1/16W 5%	NM
R232	NM	47 1/16W 5%
R233	47 1/16W 5%	NM
R235	0 --- ---	NM
R237	0.2k 1/16W 5%	NM
R239	220 1/16W 5%	0 --- ---
R243	390 1/16W 0.5%	100 1/16W 0.5%
R250	NM	0 --- ---
R254	NM	47 1/16W 5%
R257	NM	100 1/10W 0.5%
R258	NM	0 --- ---
R259	NM	0 --- ---
RB232	NM	47
RB233	NM	47
RB234	NM	47
RB235	NM	47
RB236	NM	47
RB237	NM	47
RB238	NM	47
RB239	NM	47
RB240	NM	47
RB241	NM	47

*:NOTE	SUFFIX:-13	SUFFIX:-14
C224	10uF 16V	10uF 10V
C225	10uF 16V	10uF 10V
C226	10uF 16V	10uF 10V

DPR-141B/141 (2/9)
BOARD NO. 1-673-975-13, 14
DSR-570_DPR-141_016_2

DPR-141B/141 (3/9)
SUFFIX: -13, -14

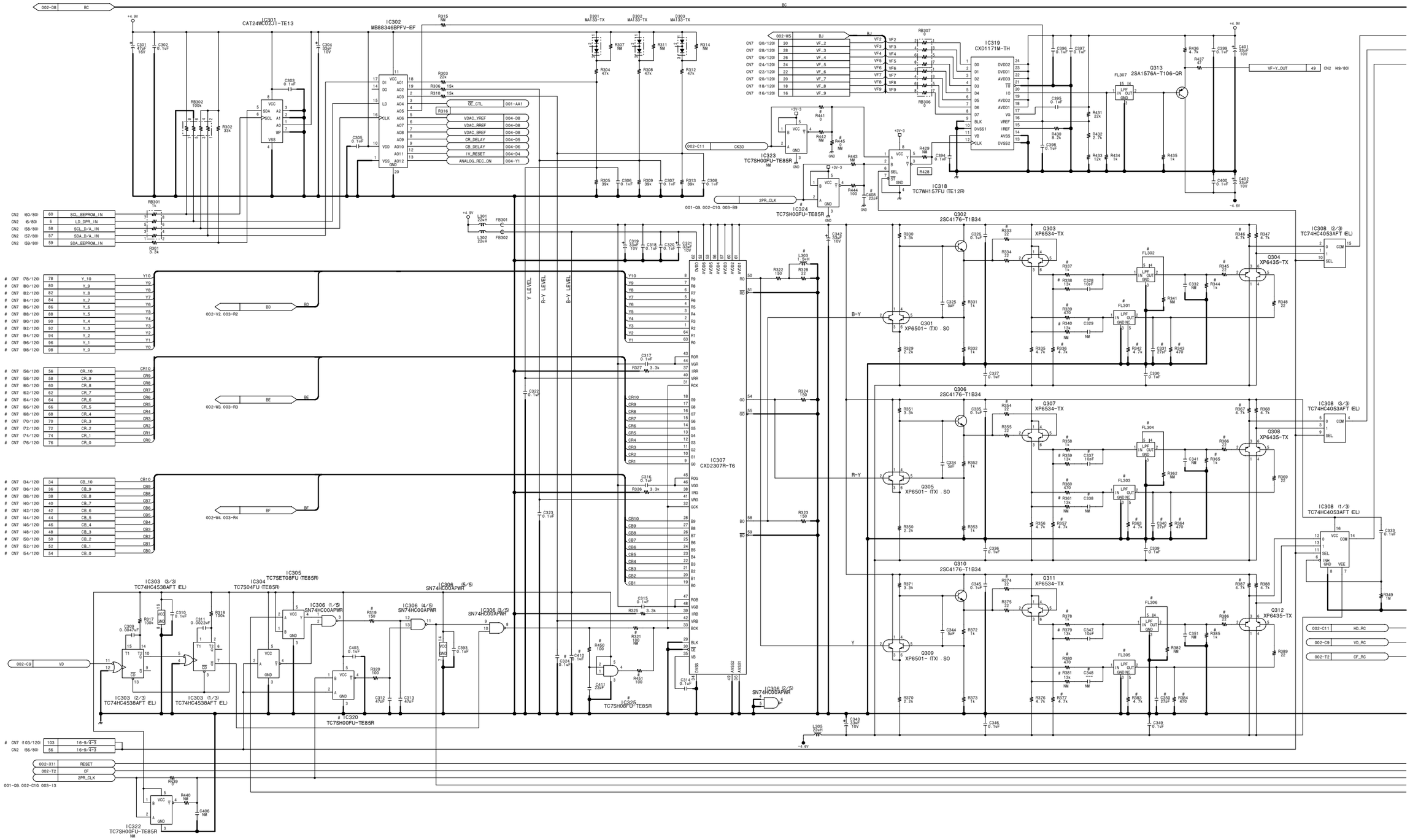

This circuit diagram is common to DSR-370/370P/300A/300AP.

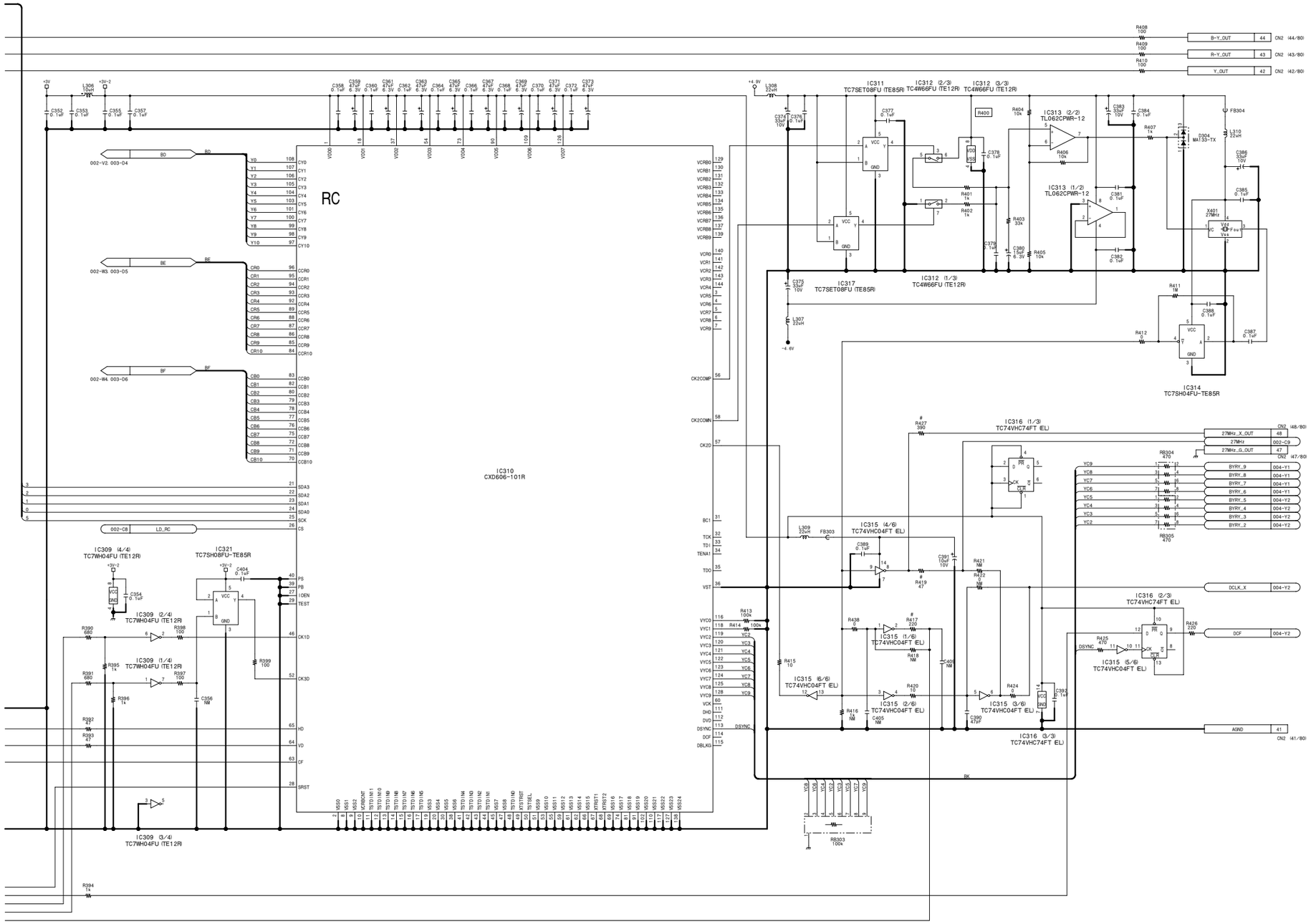

# :NOTE	570WS/500WS	370/300A
C312	47nF 50V CH	NM
C313	47nF 50V CH	NM
C328	10nF 50V CH	NM
C329	NM	10nF 50V CH
C331	27nF 50V CH	NM
C337	10nF 50V CH	NM
C338	NM	10nF 50V CH
C340	27nF 50V CH	NM
C347	10nF 50V CH	NM
C348	NM	10nF 50V CH
C350	27nF 50V CH	NM
C408	22nF 50V CH	NM
C410	0.1uF 25V F	NM
C411	22nF 50V CH	NM
CN7	1P5S 178555121	NM
FL301	123374221	123374021
FL302	123374021	NM
FL303	123374221	123374021
FL304	123374021	NM
FL305	123374221	123374021
FL306	123374021	NM
IC320	TC7SH00FU-	TC7SH08FU-
IC324	TC7SH00FU-	TC7S00FU (T
IC325	TC7SH08FU-	NM
L303	1.5uH 5%	0.47uH 5%
R319	150 1/16W 0.5%	100 1/16W 0.5%
R321	NM	100 1/16W 0.5%
R333	22 1/16W 0.5%	NM
R336	4.7k 1/16W 0.5%	NM
R337	1k 1/16W 0.5%	NM
R338	13k 1/16W 0.5%	NM
R339	470 1/16W 0.5%	1k 1/16W 0.5%
R340	NM	13k 1/16W 0.5%
R342	4.7k 1/16W 0.5%	NM
R343	470 1/16W 0.5%	1k 1/16W 0.5%
R344	1k 1/16W 0.5%	NM
R345	22 1/16W 0.5%	NM
R346	4.7k 1/16W 0.5%	100k 1/16W 0.5%
R354	22 1/16W 0.5%	NM
R357	4.7k 1/16W 0.5%	NM
R358	1k 1/16W 0.5%	NM
R359	13k 1/16W 0.5%	NM
R360	470 1/16W 0.5%	1k 1/16W 0.5%
R361	NM	13k 1/16W 0.5%
R363	4.7k 1/16W 0.5%	NM
R364	470 1/16W 0.5%	1k 1/16W 0.5%
R365	1k 1/16W 0.5%	NM
R366	22 1/16W 0.5%	NM
R367	4.7k 1/16W 0.5%	100k 1/16W 0.5%
R374	22 1/16W 0.5%	NM
R377	4.7k 1/16W 0.5%	NM
R378	1k 1/16W 0.5%	NM
R379	13k 1/16W 0.5%	NM
R380	470 1/16W 0.5%	1k 1/16W 0.5%
R381	NM	13k 1/16W 0.5%
R383	4.7k 1/16W 0.5%	NM
R384	470 1/16W 0.5%	1k 1/16W 0.5%
R385	1k 1/16W 0.5%	NM
R386	22 1/16W 0.5%	NM
R387	4.7k 1/16W 0.5%	100k 1/16W 0.5%

	570WS/500WS	370/300A
R417	220 1/10W 0.5%	0 --- ---
R419	47 1/16W 0.5%	NM
R427	390 1/16W 0.5%	NM
R441	0 0W ---	NM
R445	NM	0 --- ---
R450	100 1/10W 0.5%	NM
R451	100 1/10W 0.5%	NM

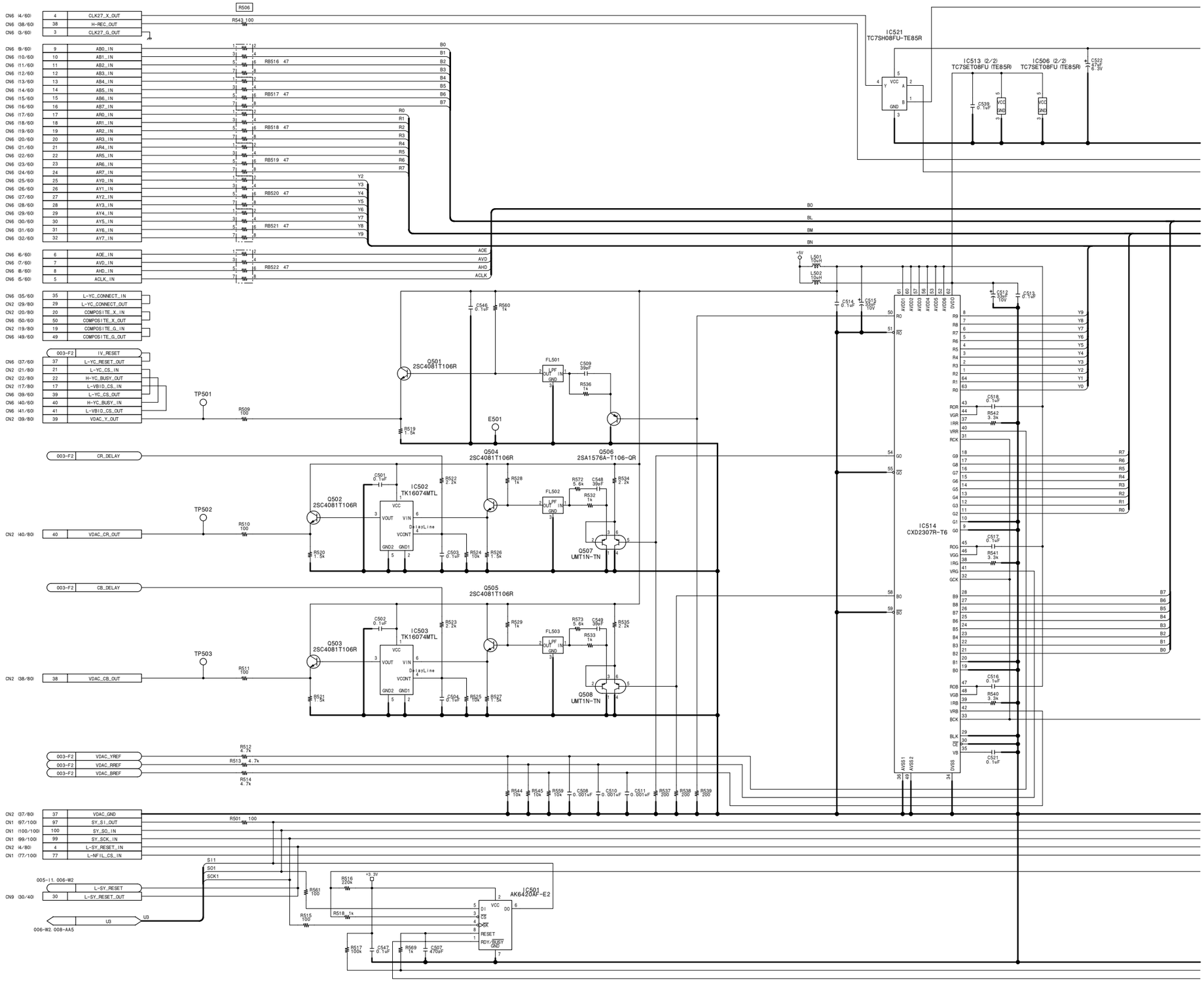
CN6 (4/60)
CN6 (38/60)
CN6 (3/60)
CLK27_X_OUT
H-REC_OUT
CLK27_G_OUT
R506
R543 100
CN6 (9/60)
CN6 (10/60)
CN6 (11/60)
CN6 (12/60)
CN6 (13/60)
CN6 (14/60)
CN6 (15/60)
CN6 (16/60)
CN6 (17/60)
CN6 (18/60)
CN6 (19/60)
CN6 (20/60)
CN6 (21/60)
CN6 (22/60)
CN6 (23/60)
CN6 (24/60)
CN6 (25/60)
CN6 (26/60)
CN6 (27/60)
CN6 (28/60)
CN6 (29/60)
CN6 (30/60)
CN6 (31/60)
CN6 (32/60)
AB0_IN
AB1_IN
AB2_IN
AB3_IN
AB4_IN
AB5_IN
AB6_IN
AB7_IN
AR0_IN
AR1_IN
AR2_IN
AR3_IN
AR4_IN
AR5_IN
AR6_IN
AR7_IN
AY0_IN
AY1_IN
AY2_IN
AY3_IN
AY4_IN
AY5_IN
AY6_IN
AY7_IN
RB516 47
RB517 47
RB518 47
RB519 47
RB520 47
RB521 47
RB522 47
B0
B1
B2
B3
B4
B5
B6
B7
R0
R1
R2
R3
R4
R5
R6
R7
Y2
Y3
Y4
Y5
Y6
Y7
Y8
Y9
CN6 (6/60)
CN6 (7/60)
CN6 (8/60)
CN6 (5/60)
ACE_IN
AVD_IN
AHD_IN
ACLK_IN
ACE
AVD
AHD
ACLK
CN6 (35/60)
CN2 (29/80)
CN2 (20/80)
CN6 (50/60)
CN2 (19/80)
CN6 (49/60)
L-YC_CONNECT_IN
L-YC_CONNECT_OUT
COMPOSITE_X_IN
COMPOSITE_X_OUT
COMPOSITE_G_IN
COMPOSITE_G_OUT
003-F2
IV_RESET
CN6 (37/60)
CN2 (21/80)
CN2 (22/80)
CN2 (17/80)
CN6 (39/60)
CN6 (40/60)
CN6 (41/60)
CN2 (39/80)
L-YC_RESET_OUT
L-YC_CS_IN
H-YC_BUSY_OUT
L-VBID_CS_IN
L-YC_CS_OUT
H-YC_BUSY_IN
L-VBID_CS_OUT
VDAC_Y_OUT
TP501
R509 100
R519 1.5k
C546 0.1uF
R560 1k
Q501 2SC4081T106R
FL501
LPF
C509 39pF
R536 1k
E501
Q504 2SC4081T106R
Q506 2SA1576A-T106-QR
003-F2
CR_DELAY
C501 0.1uF
R522 2.2k
R528 1k
IC502 TK16074MTL
VCC
VOUT
VIN
DelayLine 4
VCONT
GND2
GND1
FL502
R572 5.6k
C548 39pF
R534 2.2k
R532 1k
TP502
CN2 (40/80)
40
VDAC_CR_OUT
R510 100
R520 1.5k
C503 0.1uF
R524 10k
R526 1.5k
Q507 UMT1N-TN
003-F2
CB_DELAY
Q505 2SC4081T106R
C502 0.1uF
R523 2.2k
R529 1k
IC503 TK16074MTL
FL503
R573 5.6k
C549 39pF
R535 2.2k
R533 1k
TP503
CN2 (38/80)
38
VDAC_CB_OUT
R511 100
R521 1.5k
C504 0.1uF
R525 10k
R527 1.5k
Q508 UMT1N-TN
003-F2
003-F2
003-F2
VDAC_YREF
VDAC_RREF
VDAC_BREF
R512 4.7k
R513 4.7k
R514 4.7k
R544 10k
R545 10k
R559 10k
C508 0.001uF
C510 0.001uF
C511 0.001uF
R537 200
R538 200
R539 200
CN2 (37/80)
CN1 (97/100)
CN1 (100/100)
CN1 (99/100)
CN2 (4/80)
CN1 (77/100)
37
97
100
99
4
77
VDAC_GND
SY_SI_OUT
SY_SO_IN
SY_SCK_IN
L-SY_RESET_IN
L-NFIL_CS_IN
R501 100
SI1
SO1
SCK1
005-I1, 006-W2
L-SY_RESET
CN9 (30/40)
30
L-SY_RESET_OUT
U3
006-W2, 008-AA5
R516 220k
+3.3V
R518 1k
R515 100
R561 100
R517 100k
C547 0.1uF
R569 1k
C507 470pF
IC501 AK6420AF-E2
VCC
DI
CS
SK
RESET
RDY/BUSY
GND
DO
IC521 TC7SH08FU-TE85R
IC513 (2/2) TC7SET08FU (TE85R)
IC506 (2/2) TC7SET08FU (TE85R)
C539 0.1uF
C522 47pF 6.3V
B0
BL
BM
BN
+5V
L501 10uH
L502 10uH
C514 0.1uF
C515 680pF 10V
C512 33pF 10V
C513 0.1uF
C518 0.1uF
R542 3.3k
C517 0.1uF
R541 3.3k
C516 0.1uF
R540 3.3k
C521 0.1uF
IC514 CXD2307R-T6
AVDD1
AVDD2
AVDD3
AVDD4
AVDD5
AVDD6
DVDD
AVSS1
AVSS2
DVSS
R0
R1
Y0
Y1
Y2
Y3
Y4
Y5
Y6
Y7
Y8
Y9
RGR
VGR
IRR
VRR
RCK
RGG
VGG
IRG
VRG
GCK
RGB
VGB
IRB
VRB
BCK
BLK
CE
VB
G0
G1
G2
G3
G4
G5
G6
G7
G8
G9
GO
GO
BO
BO

4-22 (b) 4-22 (b)

DPR-141B/141 (4/9)
SUFFIX: -13, -14

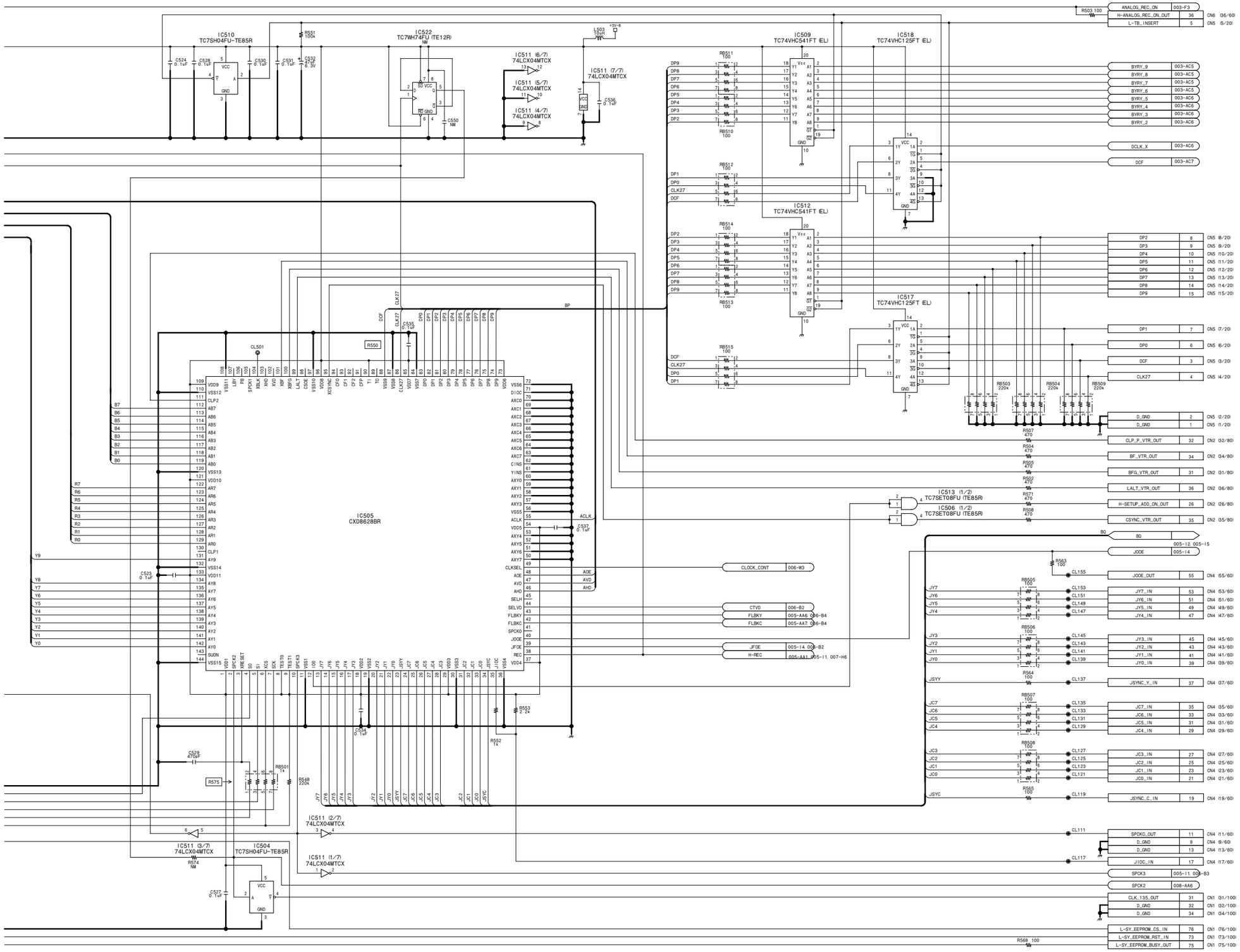

DPR-141B/141 (4/9)
BOARD NO. 1-673-975-13, 14
DSR-570_DPR-141_016_4

DPR-141B/141 (5/9)

SUFFIX: -13, -14

DPR-141B/141 (5/9)

SUFFIX: -13, -14

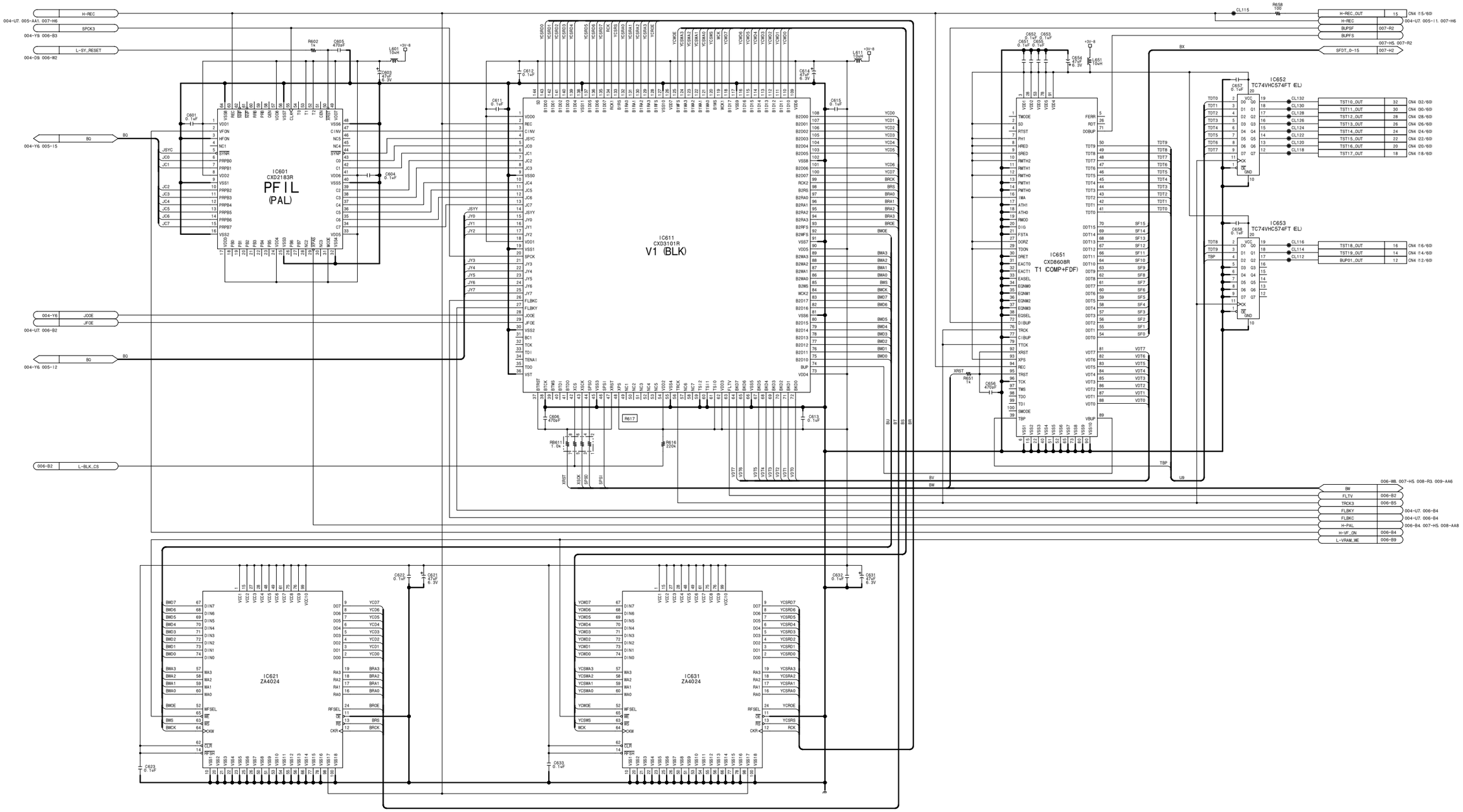

DPR-141B/141 (5/9)

BOARD NO. 1-673-975-13, 14

DSR-570_DPR-141_016_5

DPR-141B/141 (6/9)
SUFFIX: -13, -14

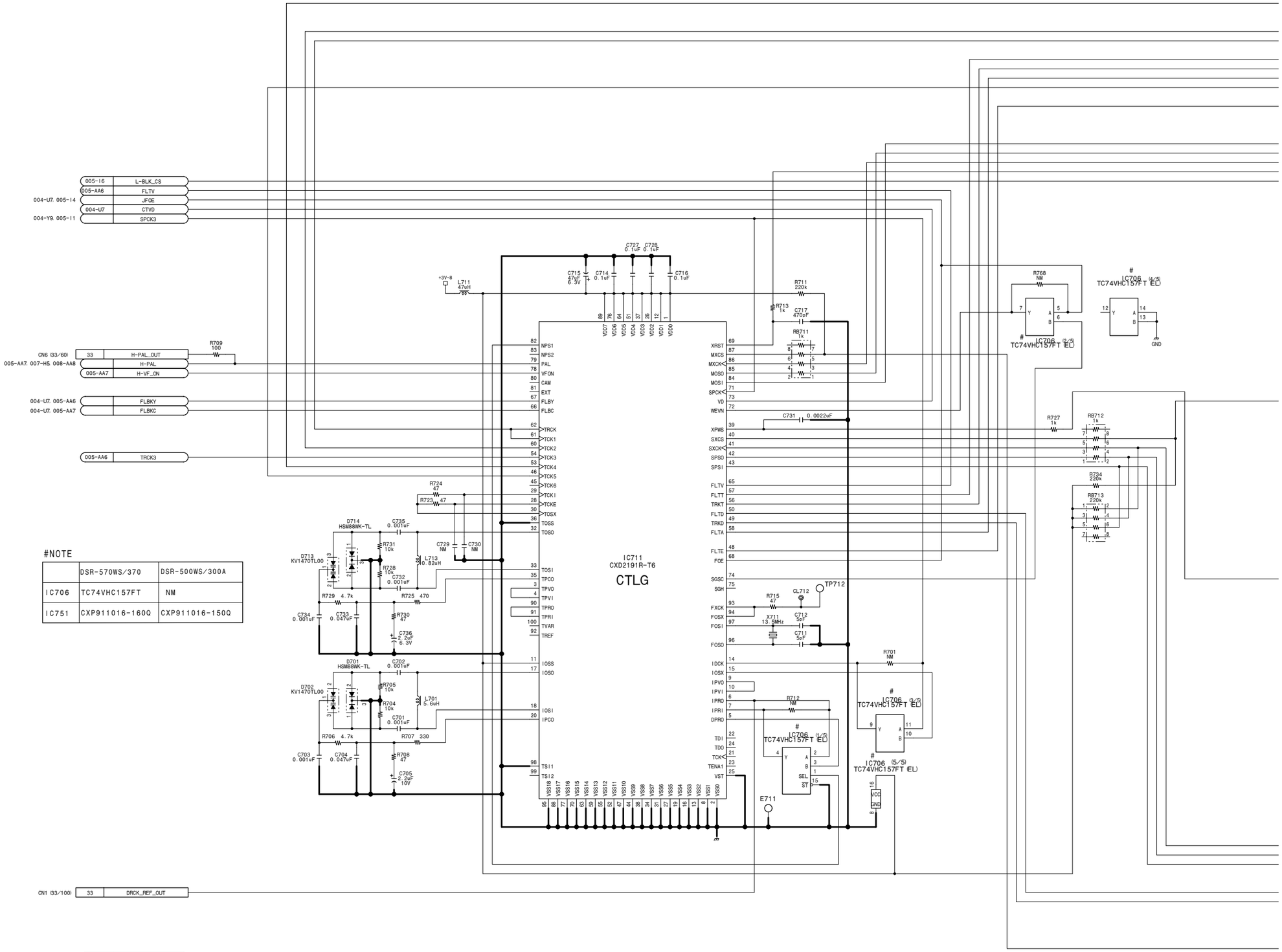

4-26 (b)

DPR-141B/141 (6/9)

SUFFIX: -13, -14

DPR-141B/141 (6/9)
SUFFIX: -13, -14

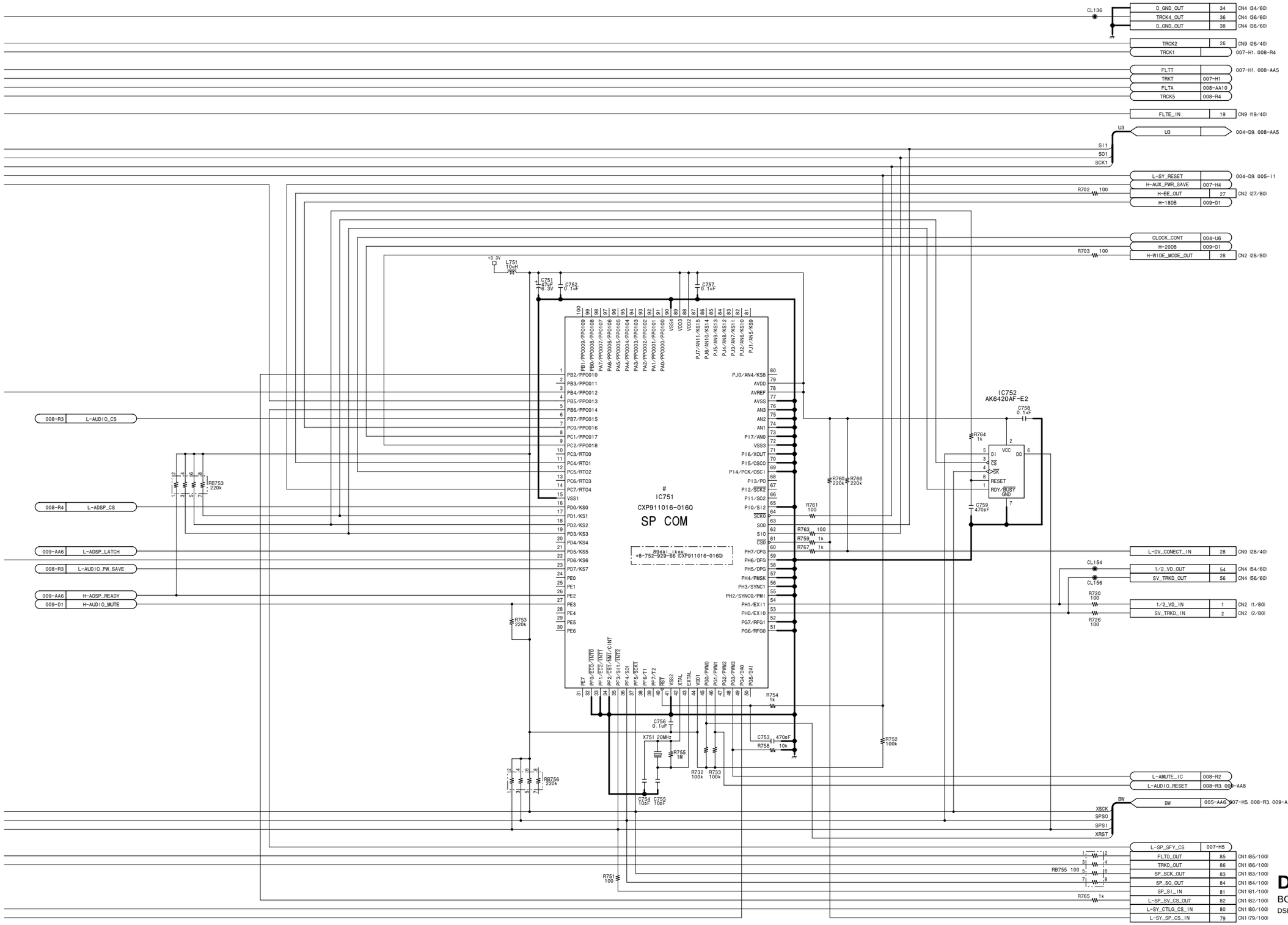

DPR-141B/141 (6/9)

BOARD NO. 1-673-975-13, 14

DSR-570_DPR-141_016_6

DPR-141B/141 (7/9)
SUFFIX: -13, -14

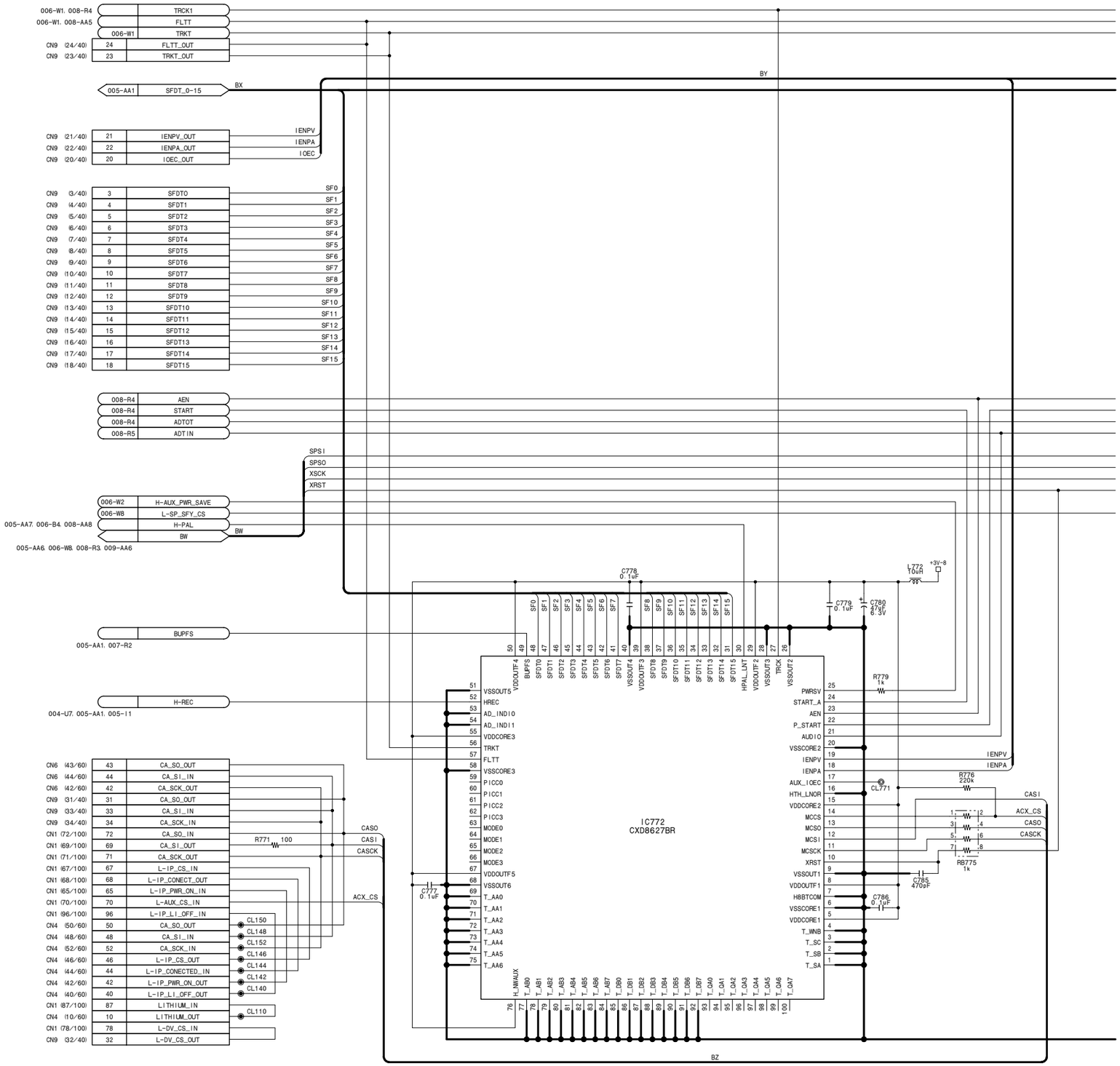

4-28 (b)

DPR-141B/141 (7/9)

SUFFIX: -13, -14

DPR-141B/141 (7/9)
SUFFIX: -13, -14

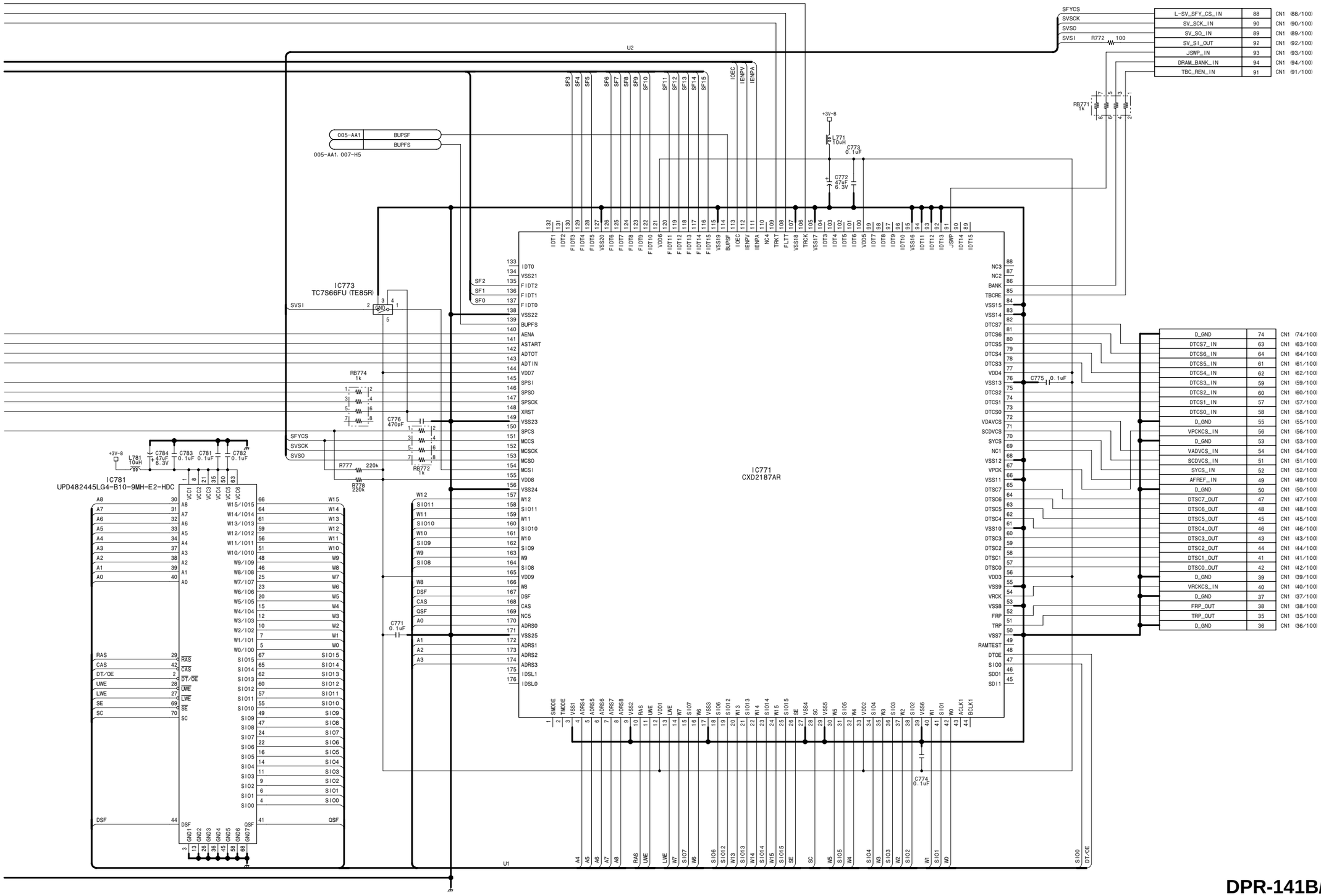

DPR-141B/141 (7/9)

BOARD NO. 1-673-975-13, 14

DSR-570_DPR-141_016_7

DPR-141B/141 (8/9)
SUFFIX: -13, -14

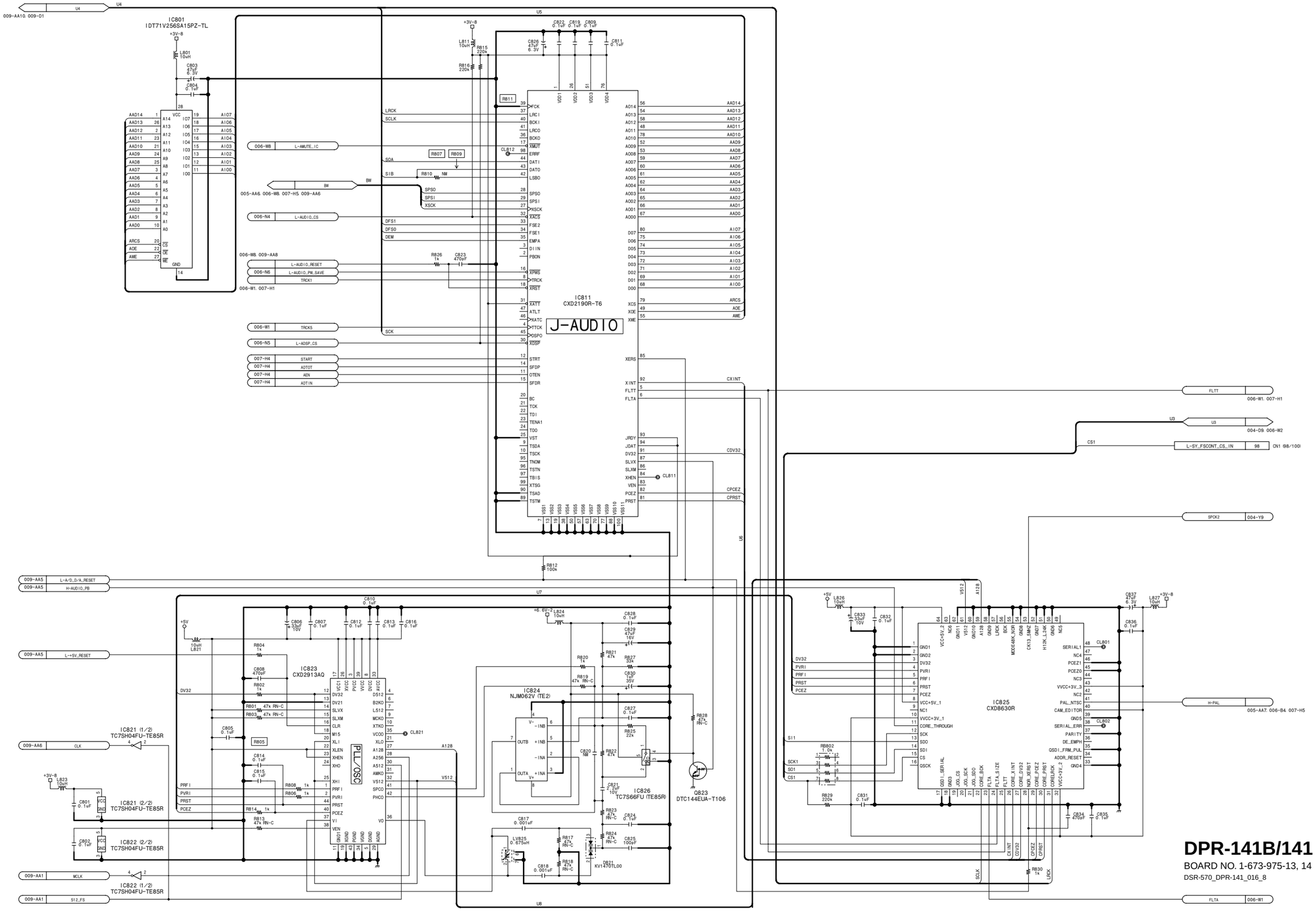

DPR-141B/141 (8/9)
BOARD NO. 1-673-975-13, 14
DSR-570_DPR-141_016_8

DPR-141B/141 (9/9)
SUFFIX: -13, -14

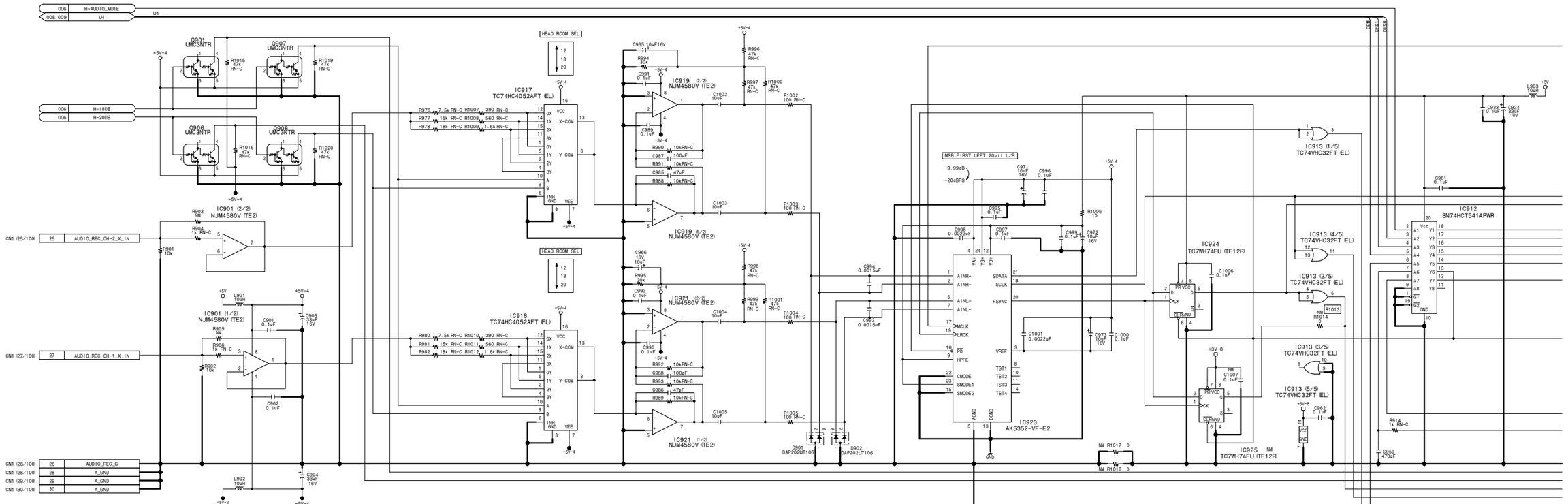

DPR-141B/141 (9/9)

SUFFIX: -13, -14

DPR-141B/141 (9/9)
SUFFIX: -13, -14

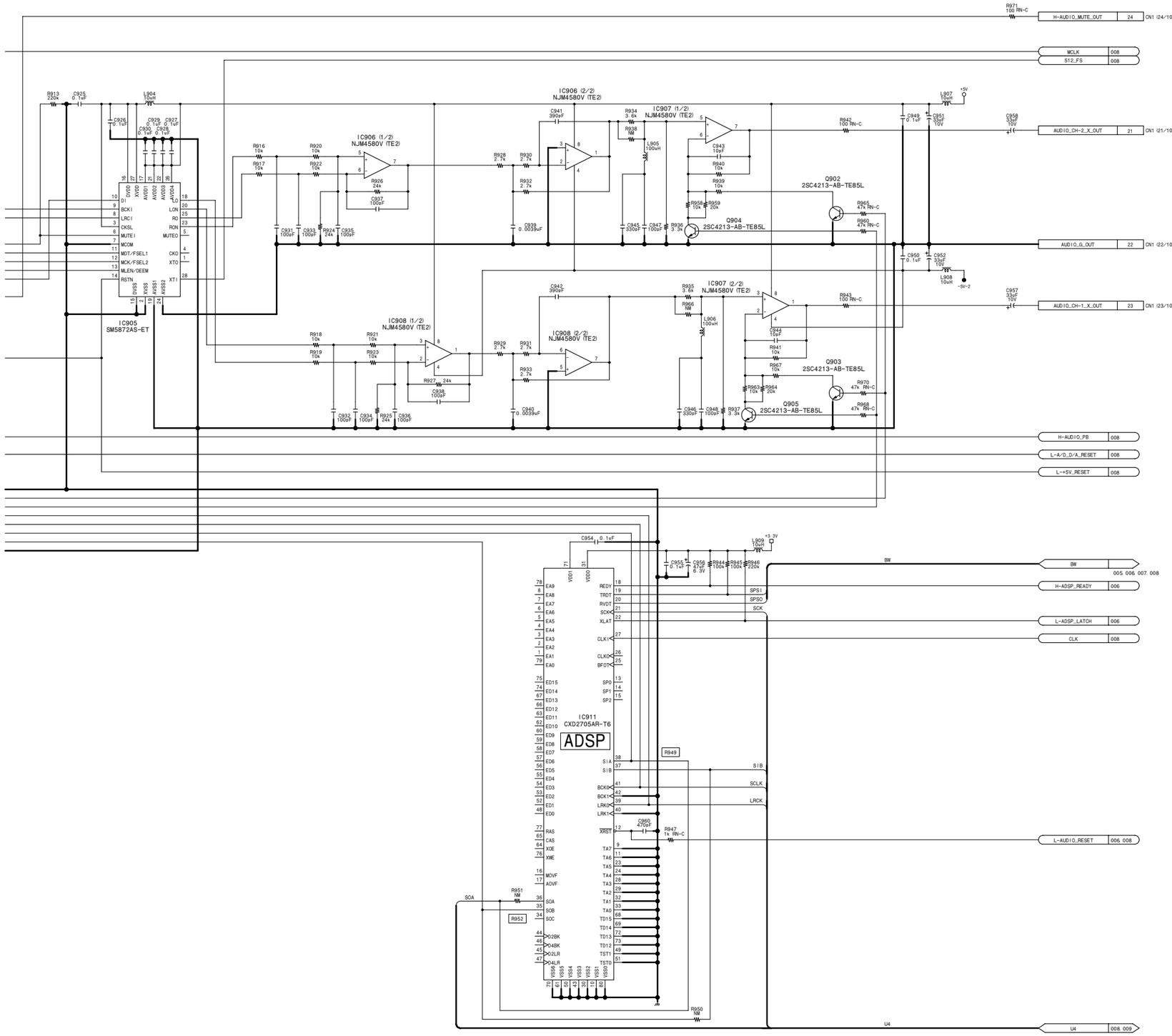

DPR-141B/141 (9/9)

BOARD NO. 1-673-975-13, 14

DSR-570_DPR-141_016_9

DPR-141 (1/9)
SUFFIX: -11

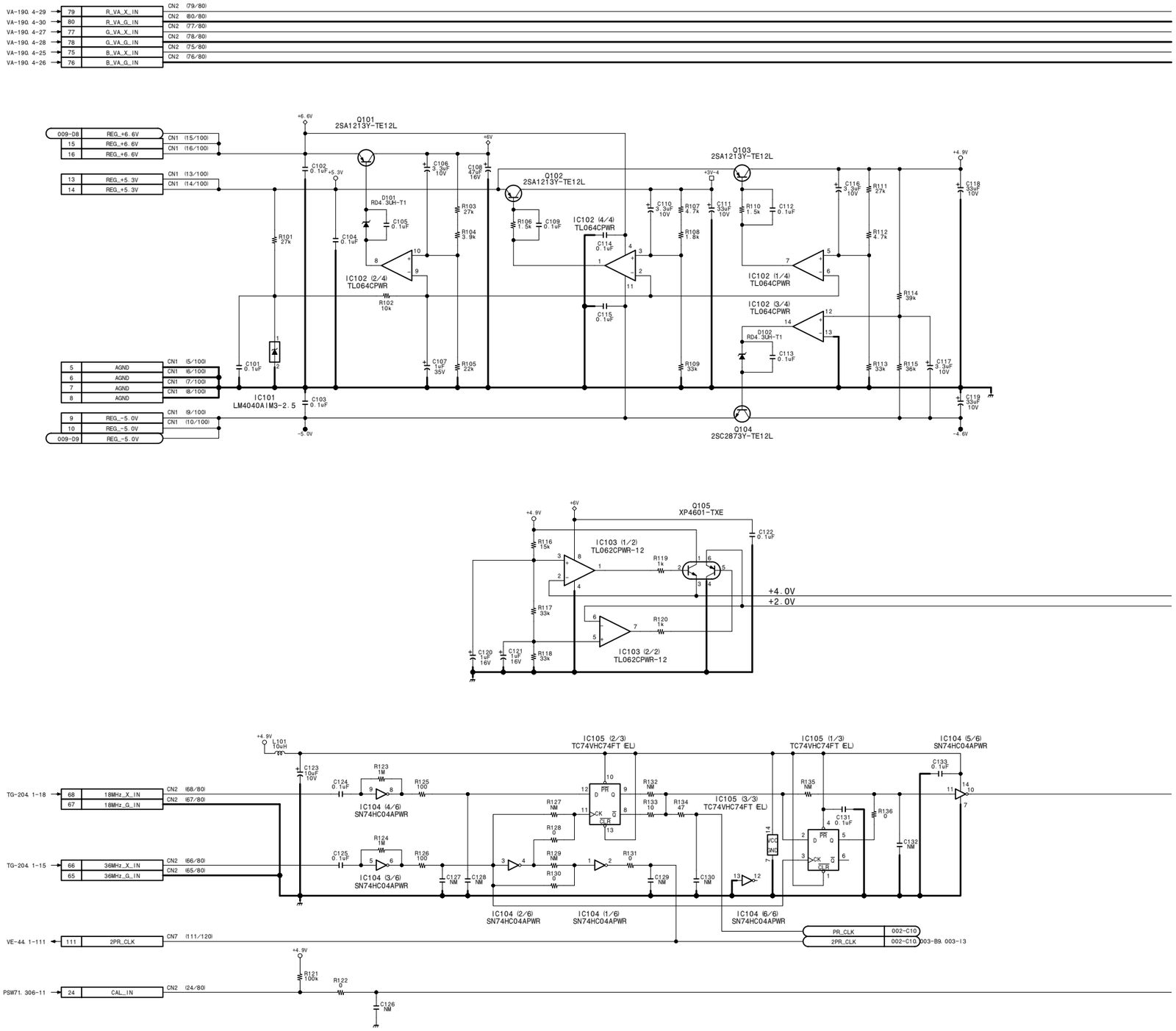

4-16 (a)

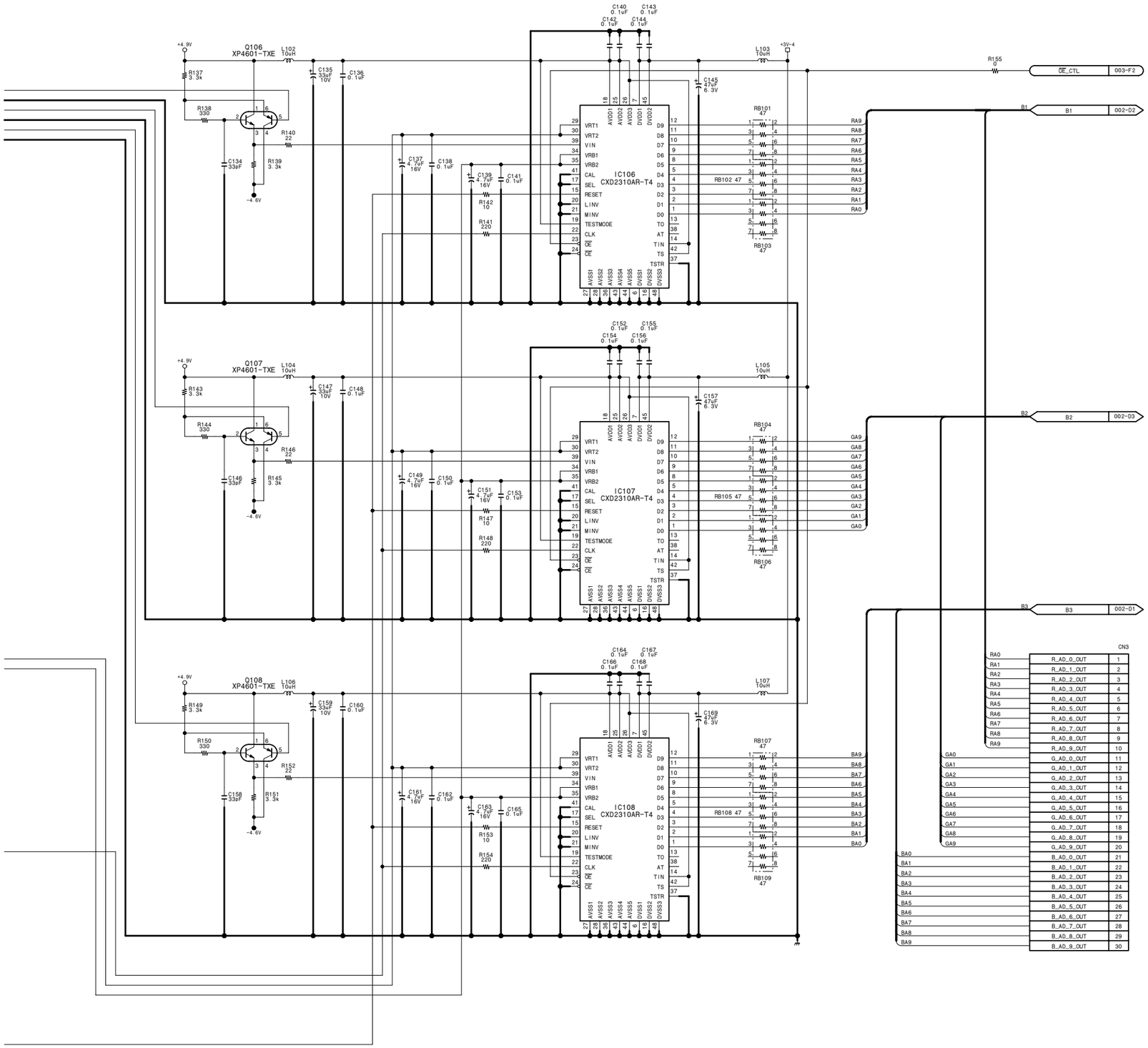

DPR-141 (1/9)
BOARD NO. 1-673-975-11
FOR DSR-500WS/500WSP
DSR-500WSL_DPR-141_004

DPR-141 (2/9) **SUFFIX: -11**

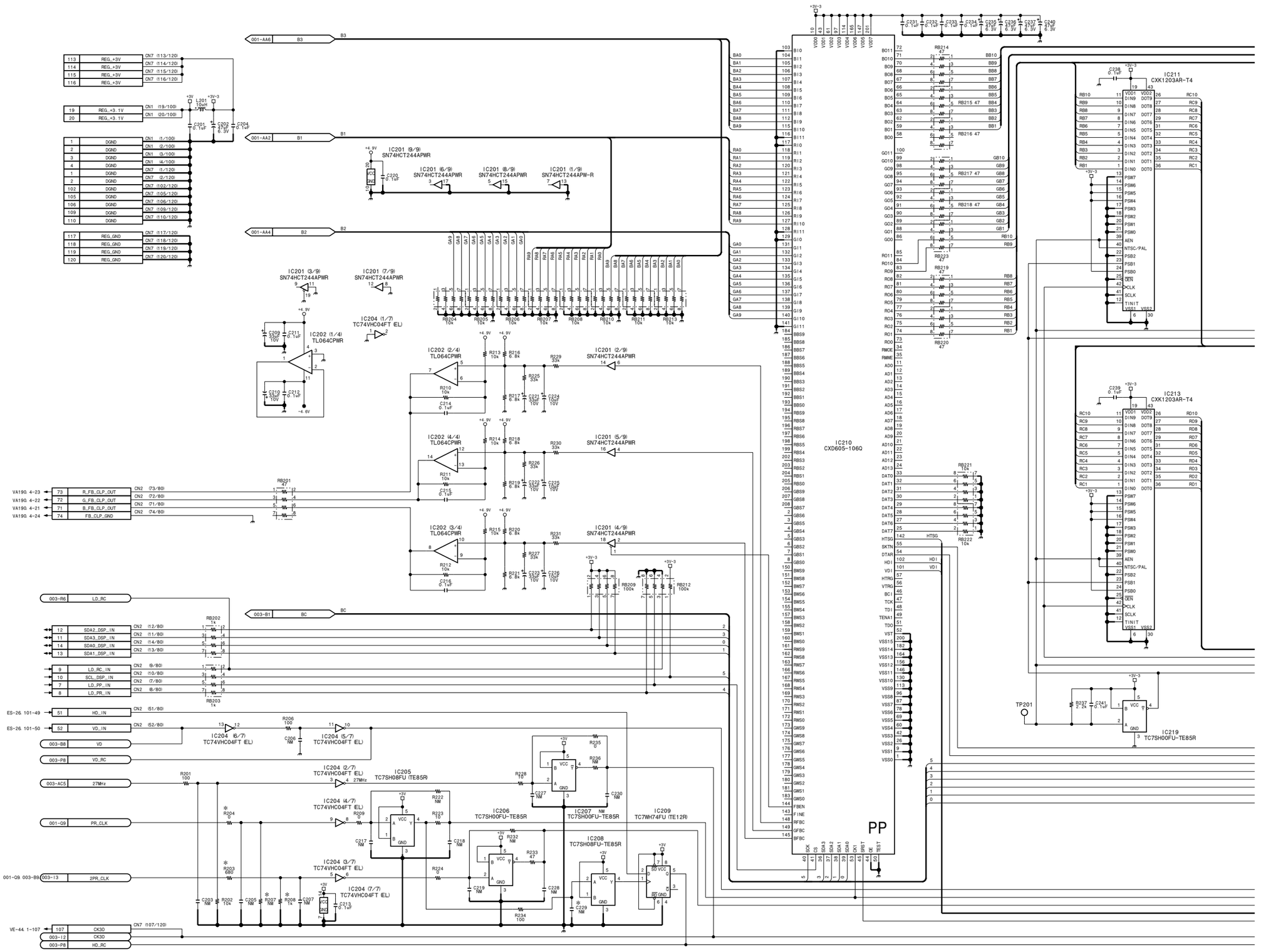

4-18 (a) 4-18 (a)

DSR-570WS/570WSP/500WS/500WSP V2

DPR-141 (2/9) **SUFFIX: -11**

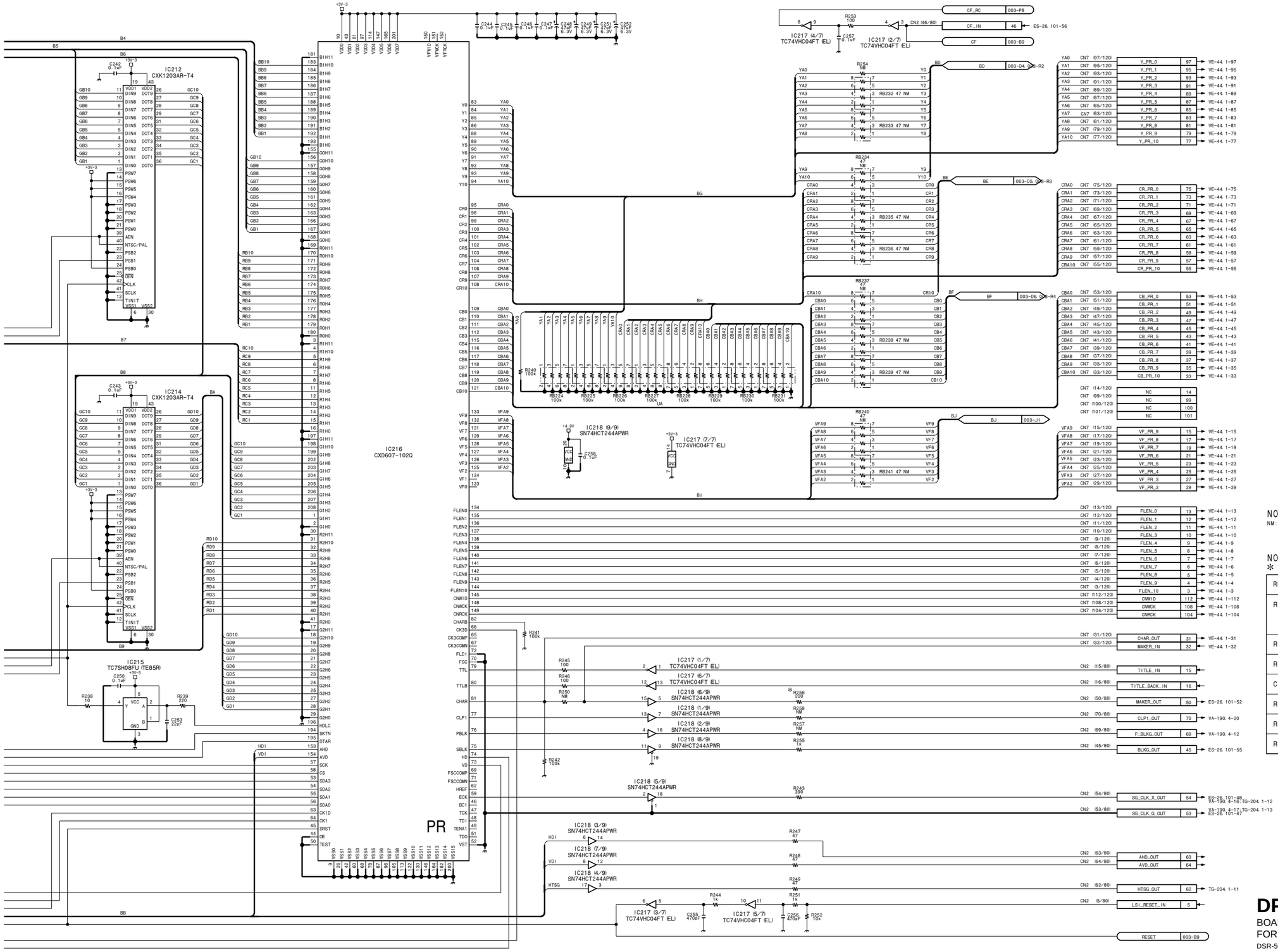

NOTE
NM:NO MOUNT

NOTE
*

REF.NO.	CHANGE INFORMATION	SERIAL NO.
R256	47 → 4.7k	(UC) 10561-12000 (J) 30161-32000 (CE) 40271-40735
R203	1.6k → 680	(UC) 10851- (J) 30266- (CE) 40481-
R208	2.4k → 1k	
C229	22p → DELETE	(UC) 12001- (J) 32001- (CE) 40736-
R204	1k → 0	
R207	1.5k → DELETE	
R256	4.7k → 200	

DPR-141 (2/9)
BOARD NO. 1-673-975-11
FOR DSR-500WS/500WSP
DSR-500WSL_DPR-141_004

DPR-141 (3/9)
SUFFIX: -11

DPR-141 (3/9)
SUFFIX: -11

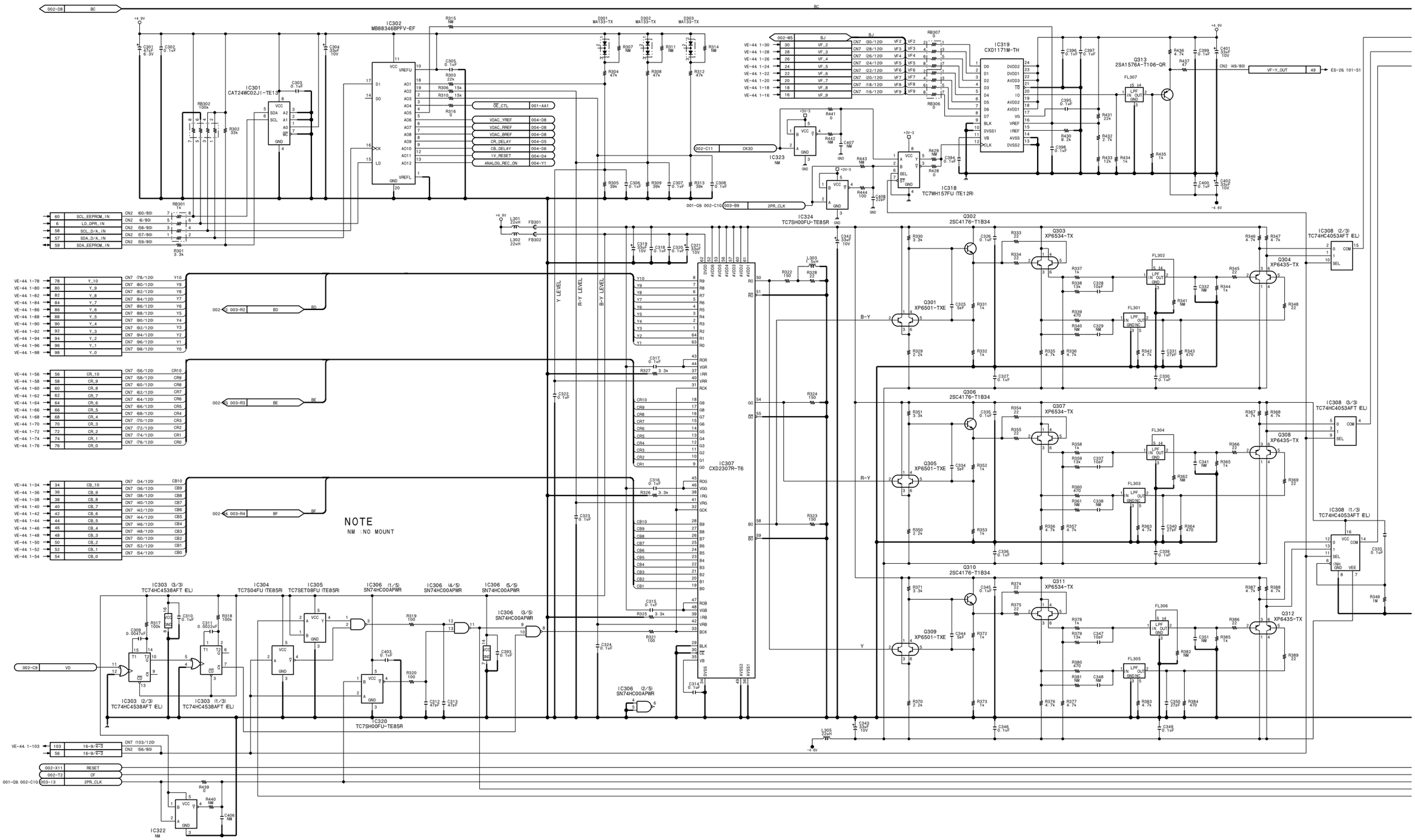

DPR-141 (3/9)
SUFFIX: -11

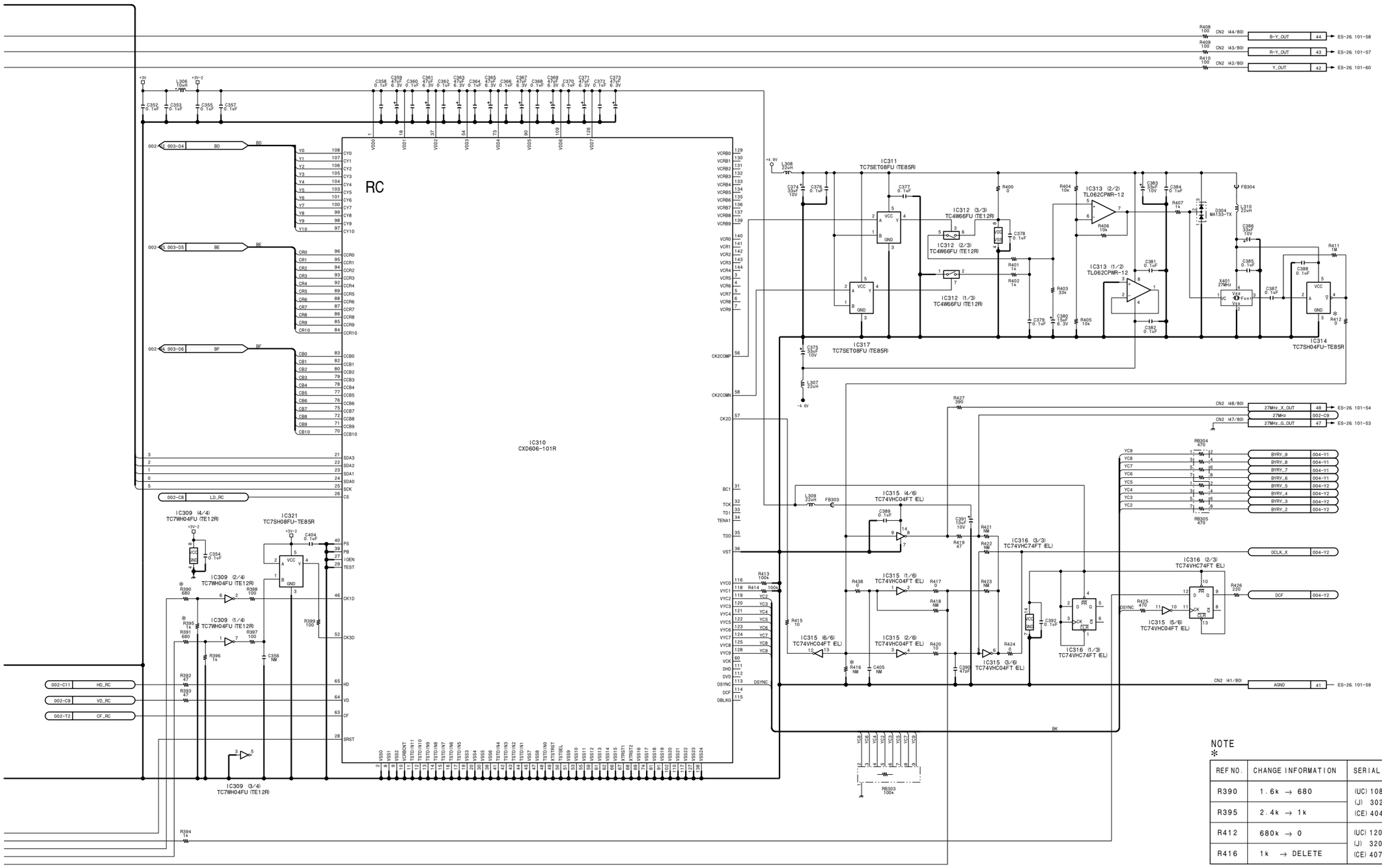

NOTE
*

REF NO.	CHANGE INFORMATION	SERIAL NO.
R390	1.6k → 680	(UC) 10851-
R395	2.4k → 1k	(J) 30266- (CE) 40481-
R412	680k → 0	(UC) 12001-
R416	1k → DELETE	(J) 32001- (CE) 40736-

DPR-141 (3/9)

BOARD NO. 1-673-975-11
FOR DSR-500WS/500WSP
DSR-500WSL_DPR-141_004

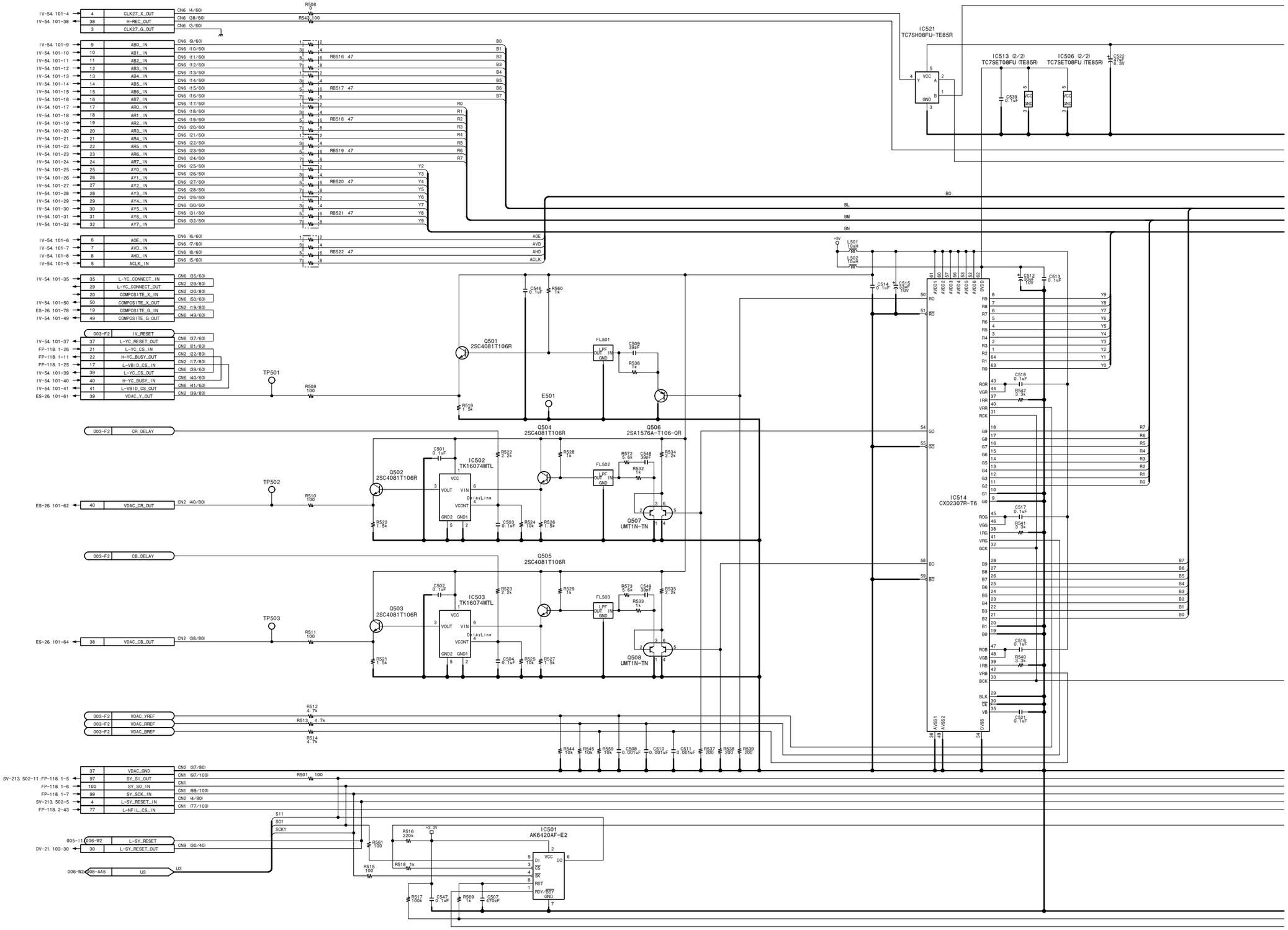

4-22 (a) 4-22 (a)

DSR-570WS/570WSP/500WS/500WSP V2

DPR-141 (4/9)
SUFFIX: -11

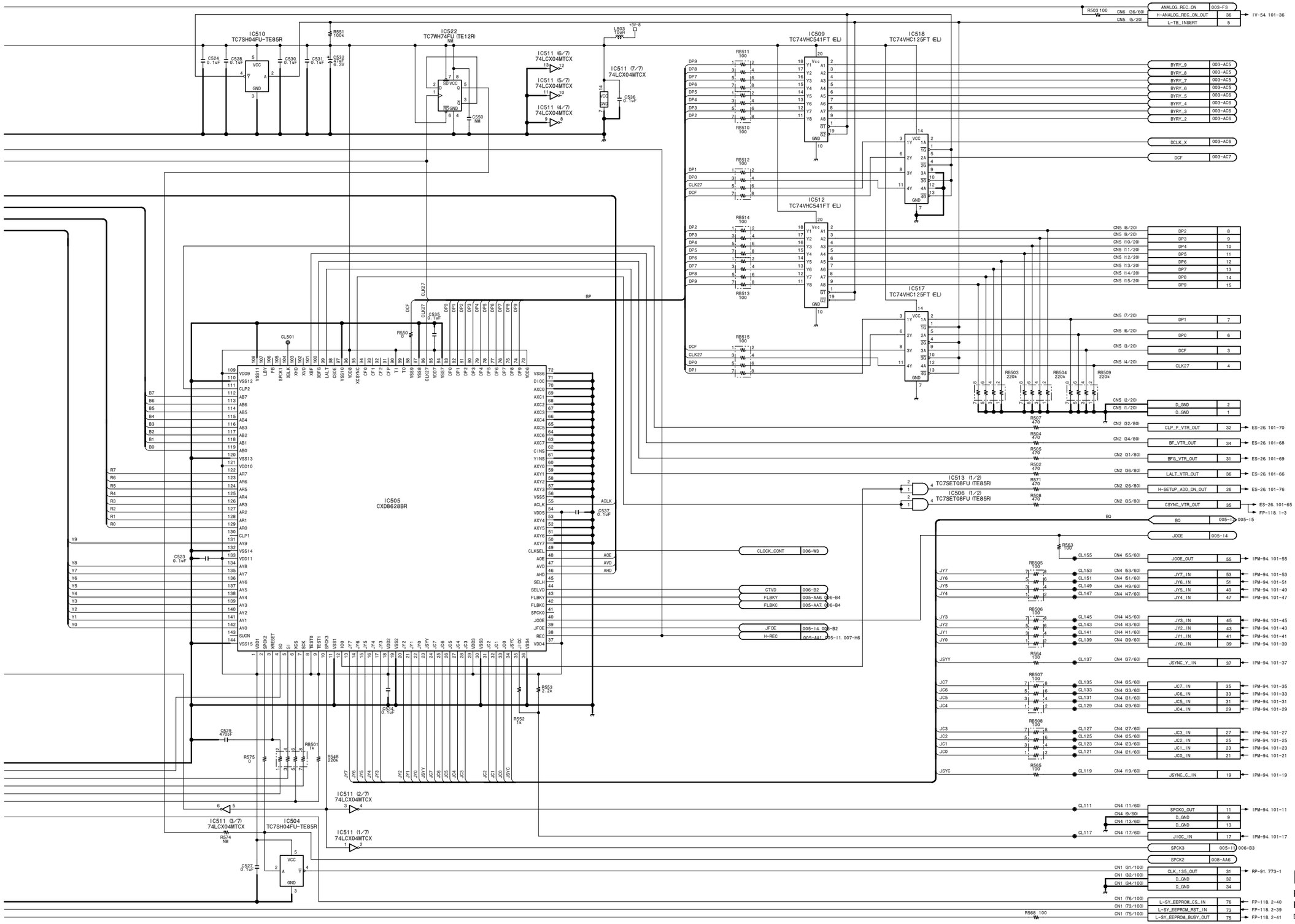

DPR-141 (4/9)
BOARD NO. 1-673-975-11
FOR DSR-500WS/500WSP
DSR-500WSL_DPR-141_004

DPR-141 (5/9)
SUFFIX: -11

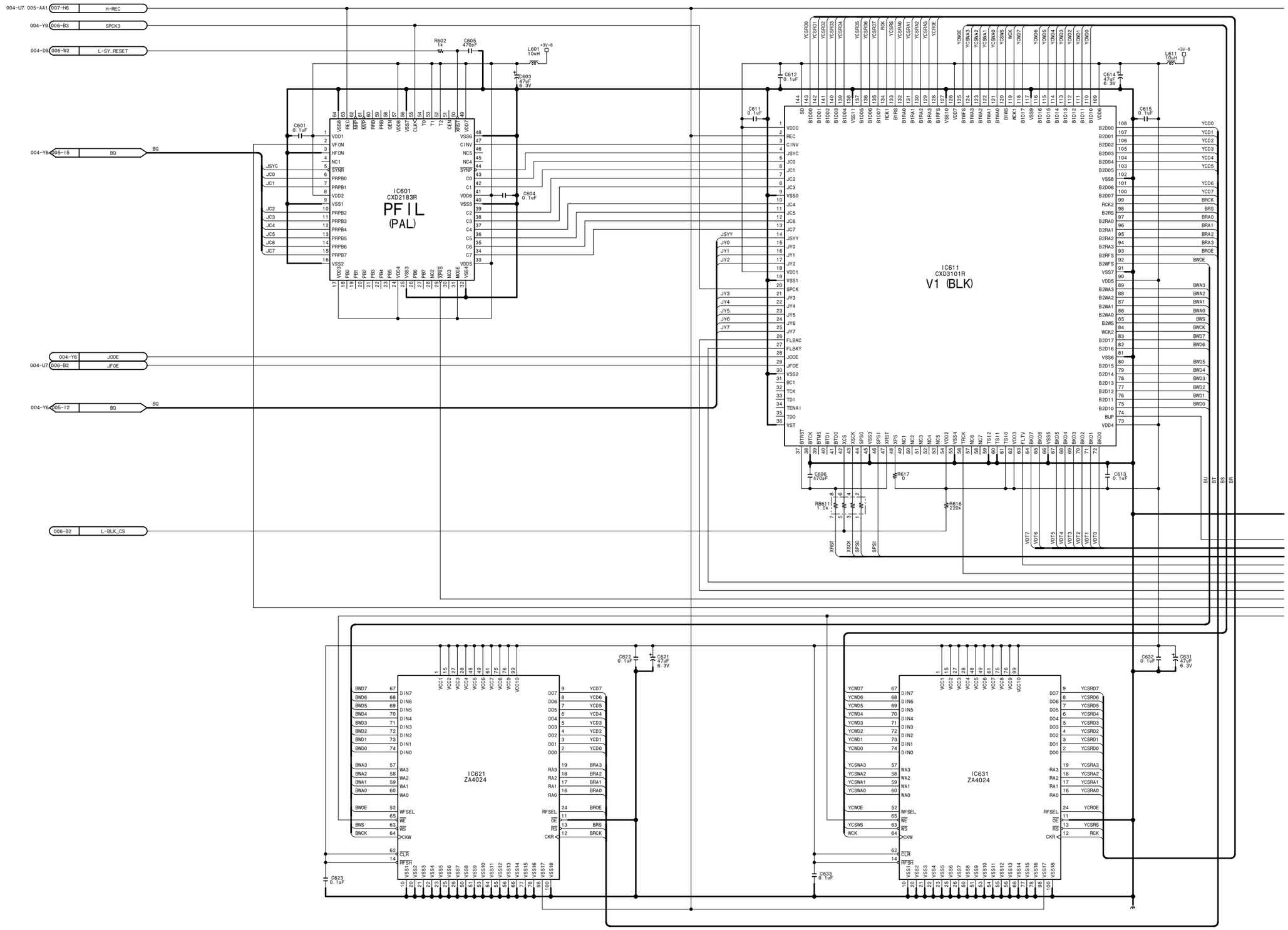

4-24 (a)
4-24 (a)

DPR-141 (5/9)
SUFFIX: -11

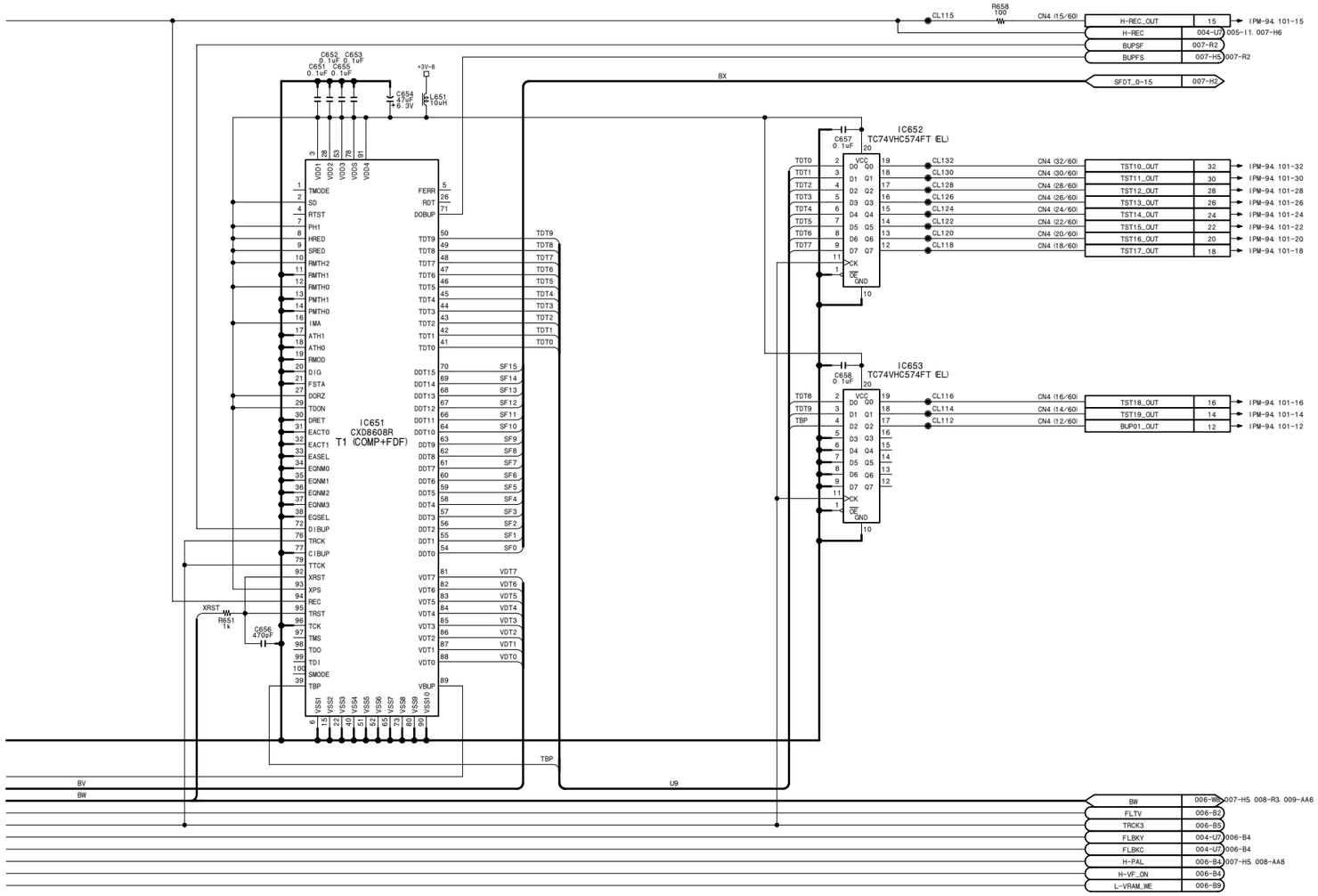

DPR-141 (5/9)
BOARD NO. 1-673-975-11
FOR DSR-500WS/500WSP
DSR-500WSL_DPR-141_004

DPR-141 (6/9)
SUFFIX: -11

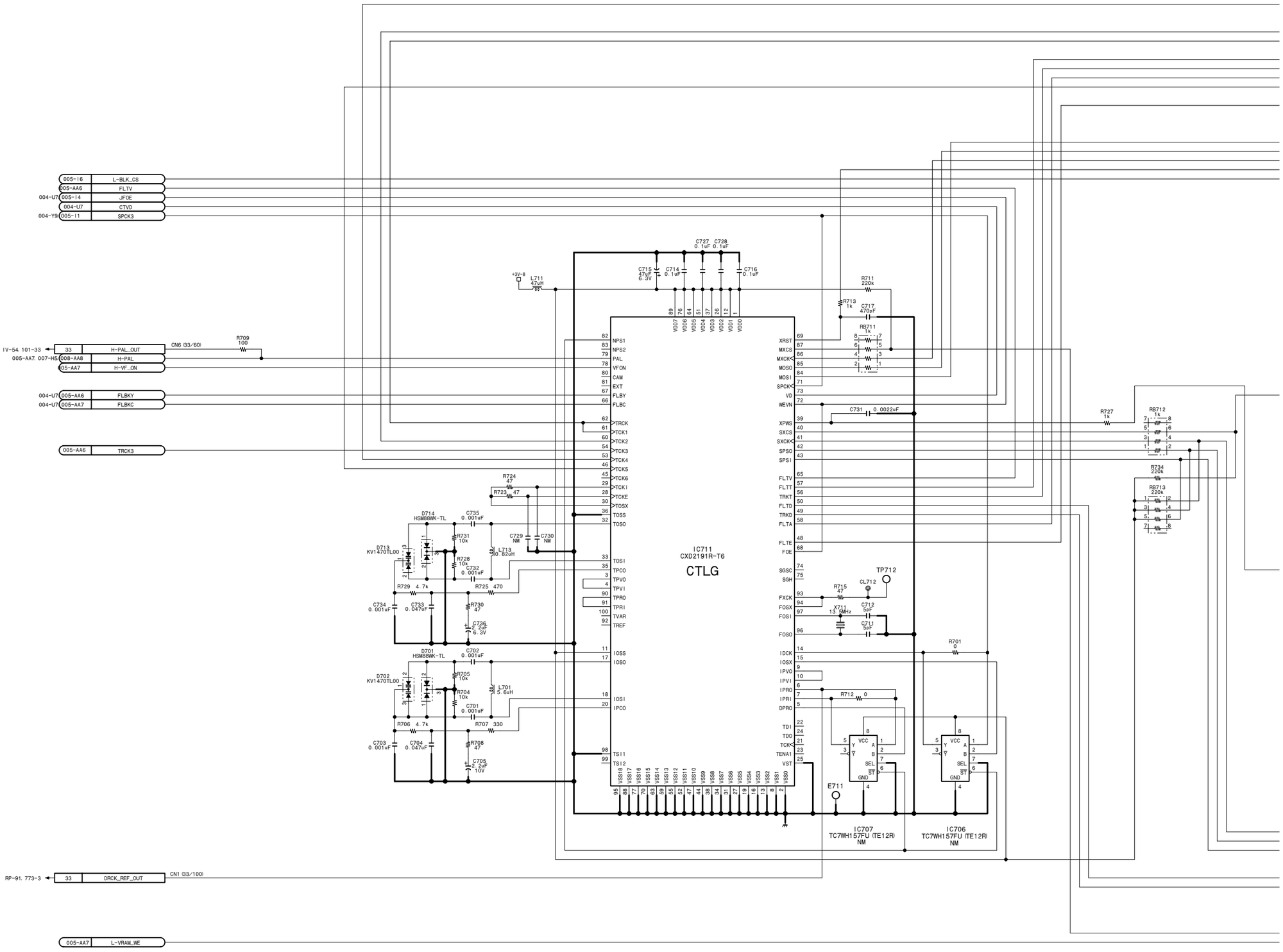

4-26 (a)

DPR-141 (6/9)
SUFFIX: -11

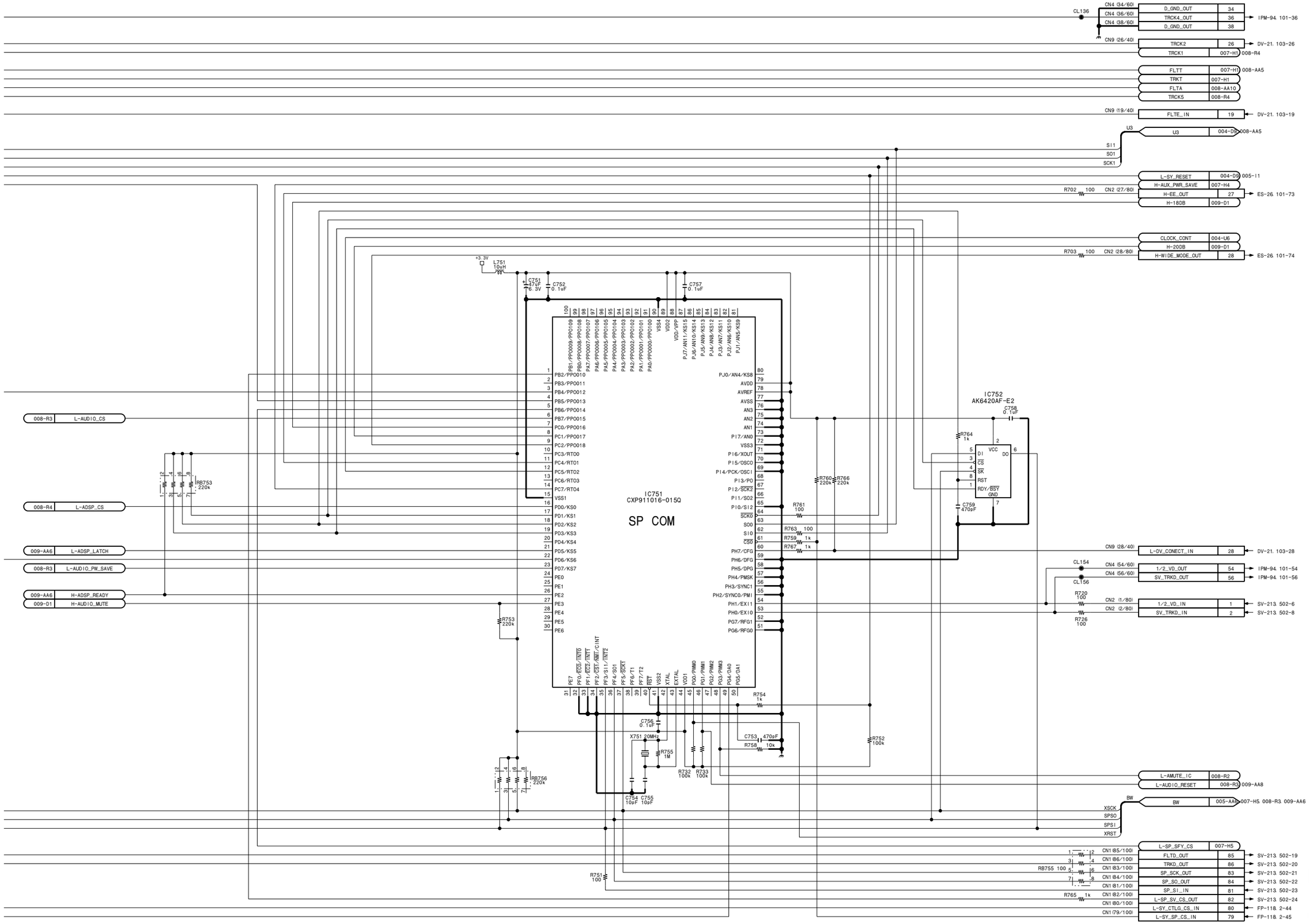

DPR-141 (6/9)
BOARD NO. 1-673-975-11
FOR DSR-500WS/500WSP
DSR-500WSL_DPR-141_004

DPR-141 (7/9)
SUFFIX: -11

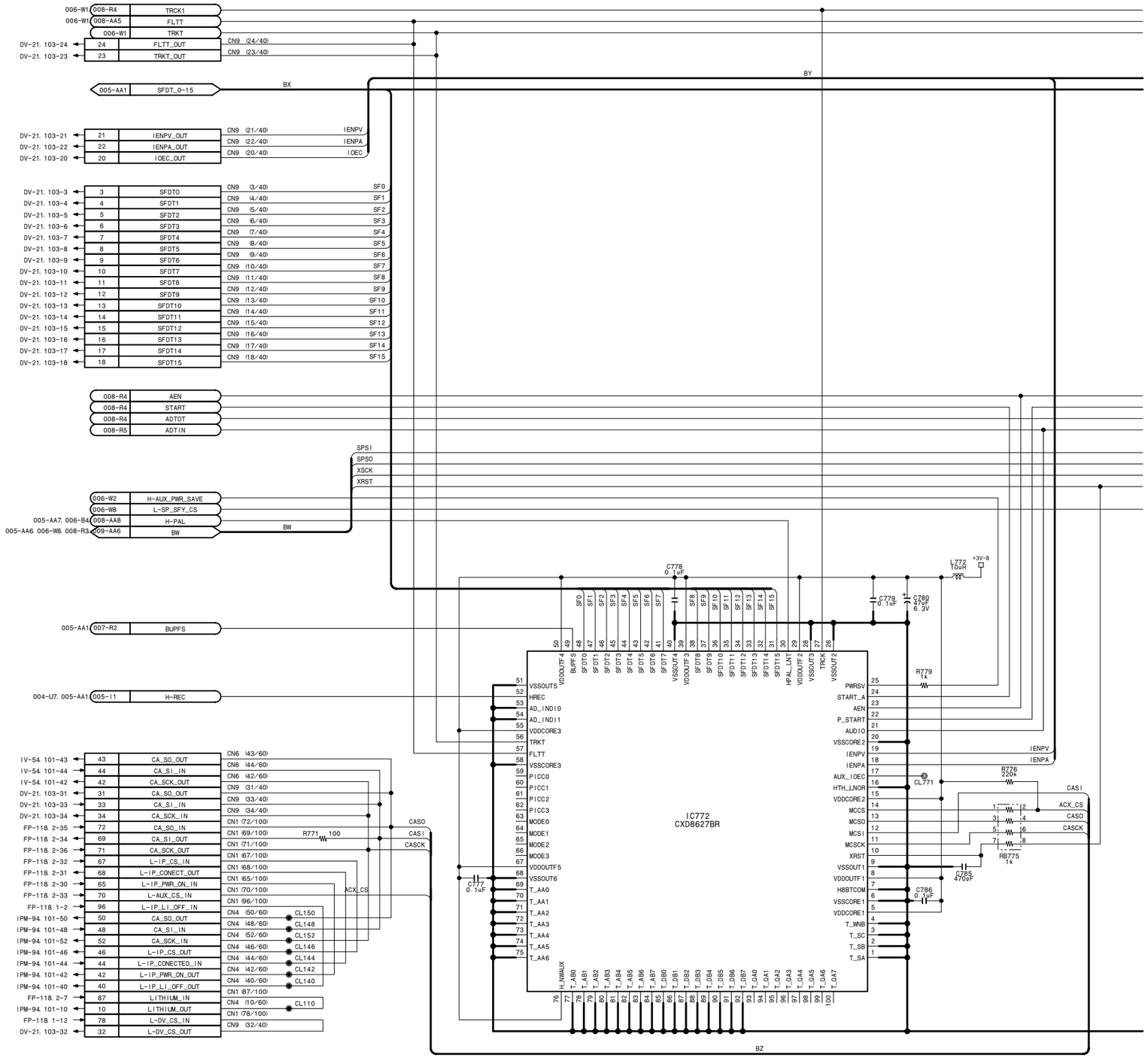

4-28 (a)

DPR-141 (7/9)
SUFFIX: -11

DPR-141 (7/9)
SUFFIX: -11

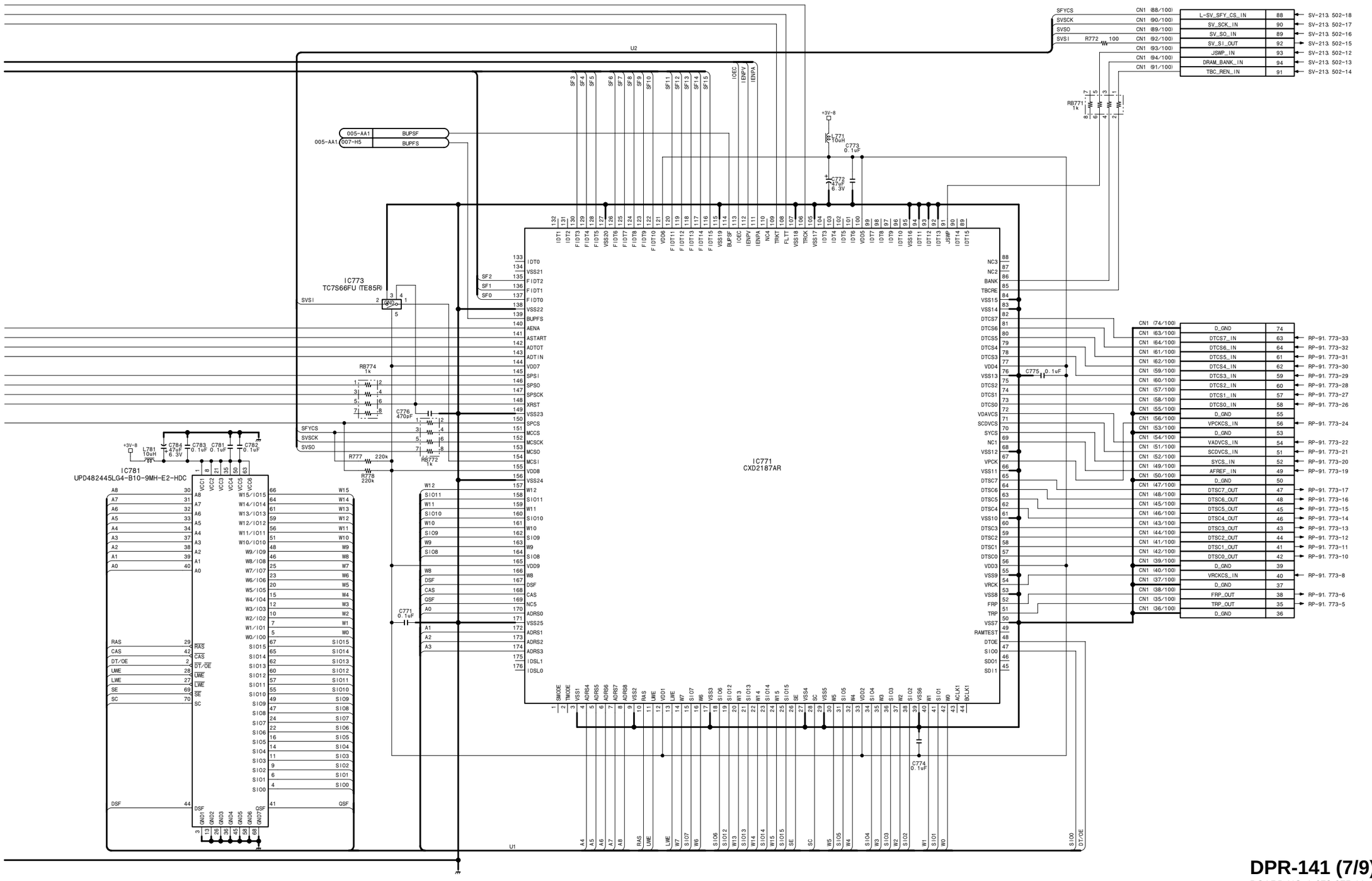

DPR-141 (7/9)
BOARD NO. 1-673-975-11
FOR DSR-500WS/500WSP
DSR-500WSL_DPR-141_004

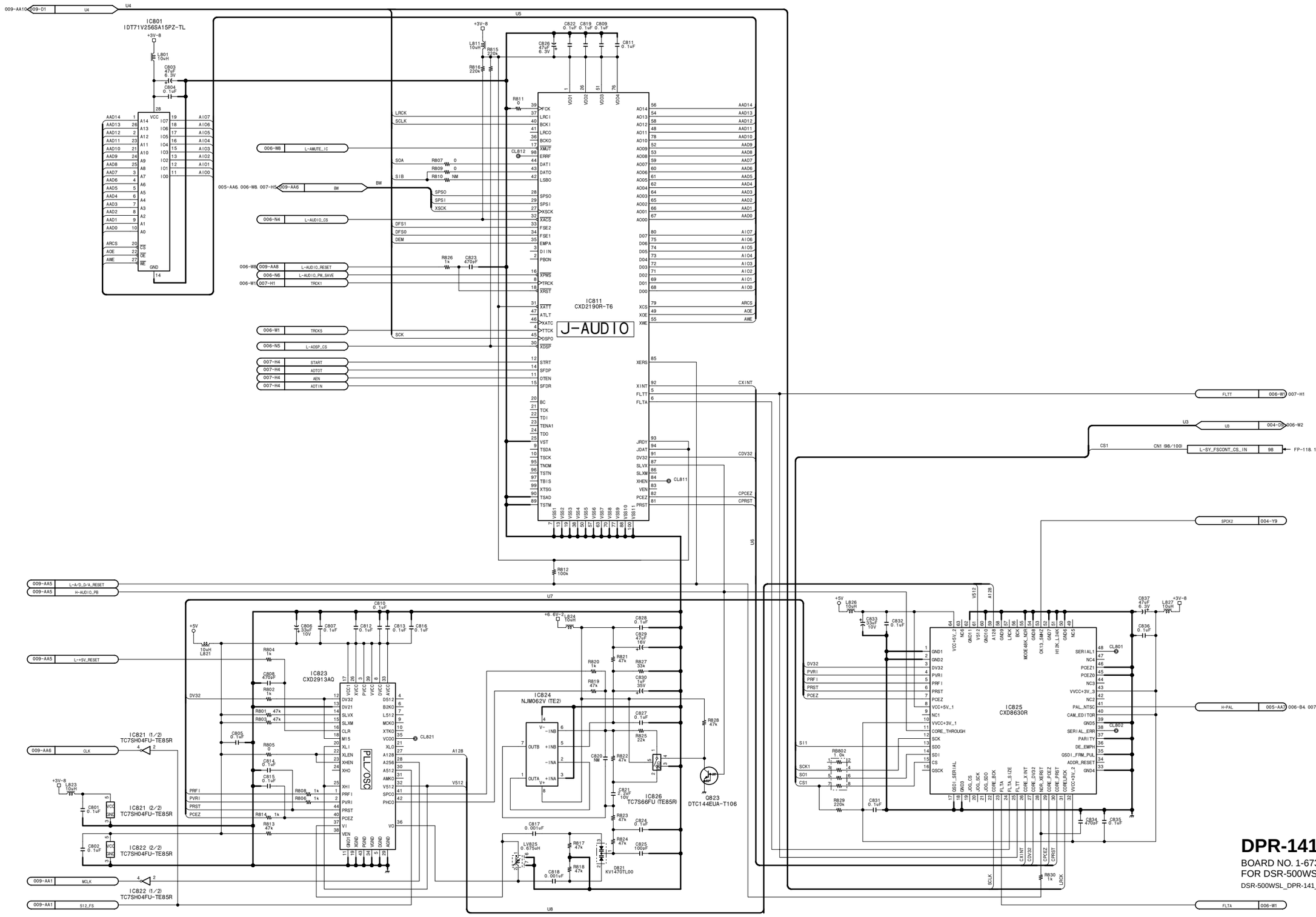

DPR-141 (8/9)
BOARD NO. 1-673-975-11
FOR DSR-500WS/500WSP
DSR-500WSL_DPR-141_004

DPR-141 (9/9)
SUFFIX: -11

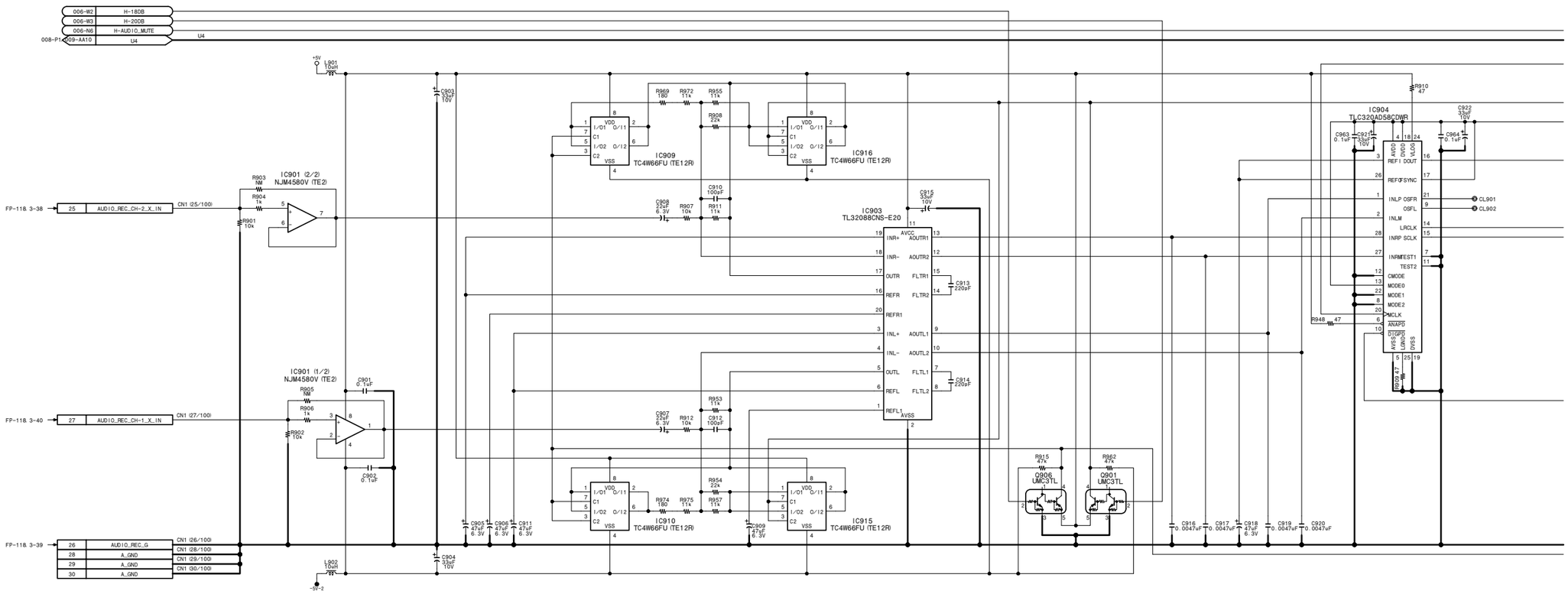

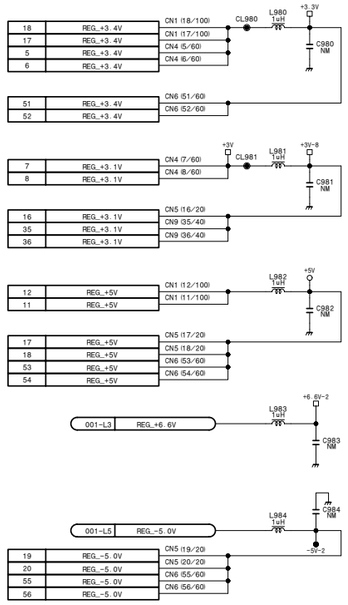

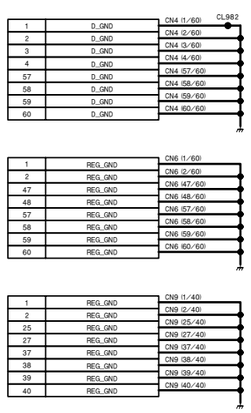

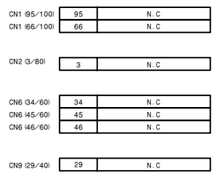

DPR-141 (9/9)
SUFFIX: -11

DPR-141 (9/9)
SUFFIX: -11

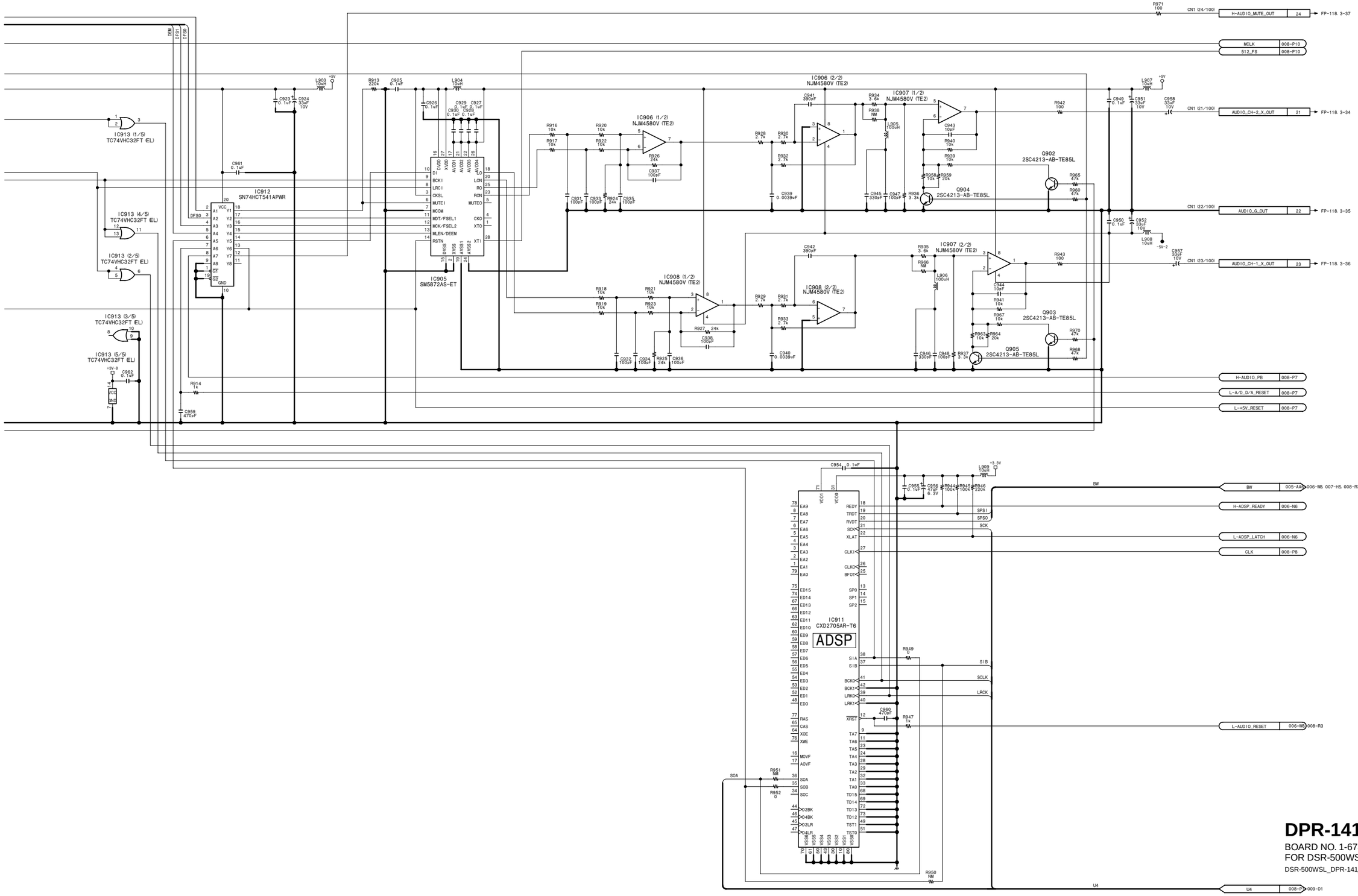

DPR-141 (9/9)
BOARD NO. 1-673-975-11
FOR DSR-500WS/500WSP
DSR-500WSL_DPR-141_004

ES-26 (1/4)

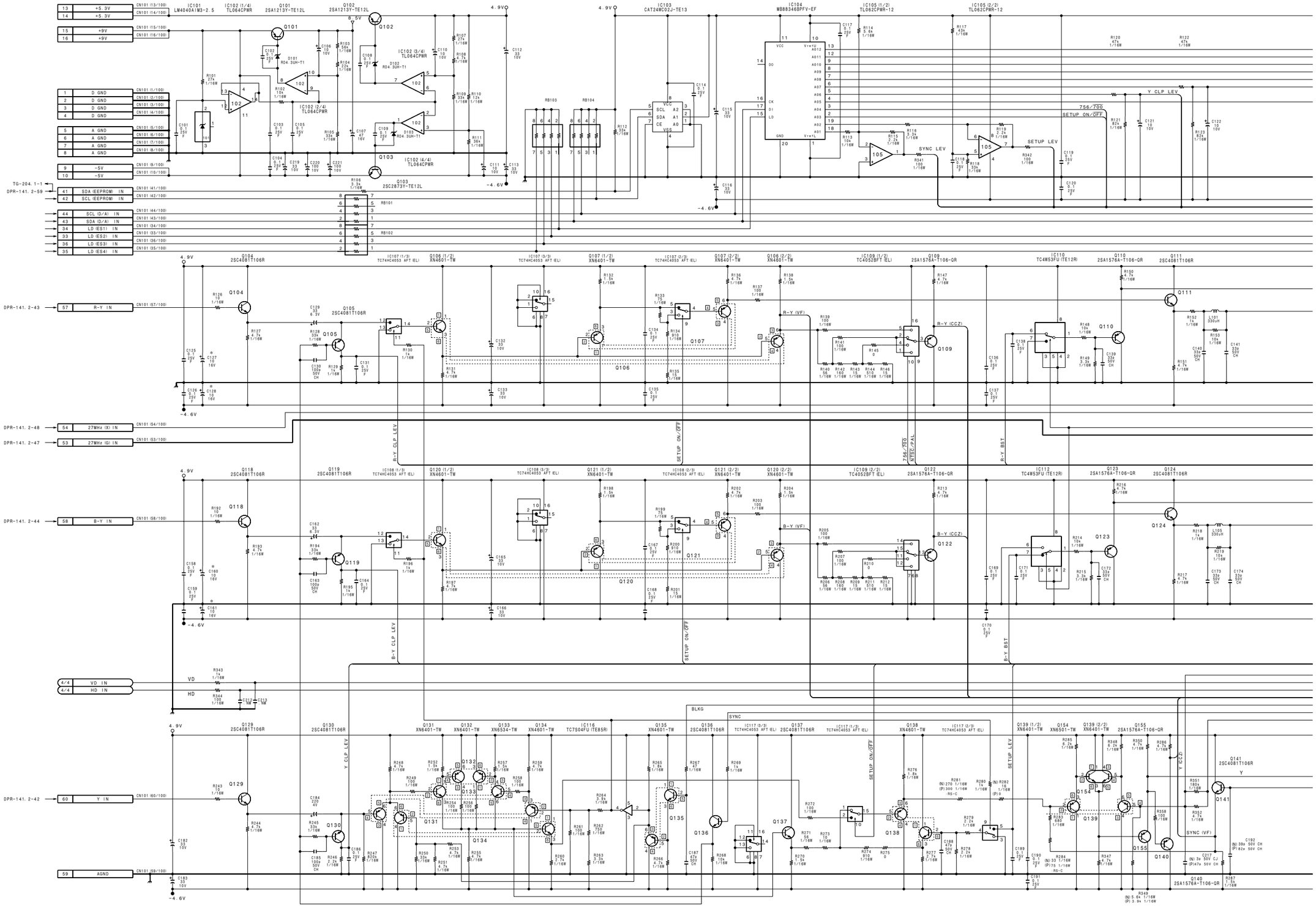
IC101 LM4040AIM3-2.5
IC102 (1/4) TL064CPWR
IC102 (2/4) TL064CPWR
IC102 (3/4) TL064CPWR
IC102 (4/4) TL064CPWR
Q101 2SA1213Y-TE12L
Q102 2SA1213Y-TE12L
Q103 2SC2873Y-TE12L
IC103 CAT24WC02J-TE13
IC104 MB88346BPFV-EF
IC105 (1/2) TL062CPWR-12
IC105 (2/2) TL062CPWR-12
CN101 (13/100) +5.3V
CN101 (14/100) +5.3V
CN101 (15/100) +9V
CN101 (16/100) +9V
CN101 (1/100) D GND
CN101 (2/100) D GND
CN101 (3/100) D GND
CN101 (4/100) D GND
CN101 (5/100) A GND
CN101 (6/100) A GND
CN101 (7/100) A GND
CN101 (8/100) A GND
CN101 (9/100) -5V
CN101 (10/100) -5V
CN101 (41/100) SDA (EEPROM) IN
CN101 (42/100) SCL (EEPROM) IN
CN101 (44/100) SCL (D/A) IN
CN101 (43/100) SDA (D/A) IN
CN101 (34/100) LD (ES1) IN
CN101 (33/100) LD (ES2) IN
CN101 (36/100) LD (ES3) IN
CN101 (35/100) LD (ES4) IN
TG-204.1-1
DPR-141.2-59
RB101
RB102
RB103
RB104
4.9V
8.5V
-4.6V
SETUP LEV
SYNC LEV
Y CLP LEV
756/700 SETUP ON/OFF
IC107 (1/3) TC74HC4053 AFT (EL)
IC107 (2/3) TC74HC4053 AFT (EL)
IC107 (3/3) TC74HC4053 AFT (EL)
Q104 2SC4081T106R
Q105 2SC4081T106R
Q106 (1/2) XN4601-TW
Q106 (2/2) XN4601-TW
Q107 (1/2) XN6401-TW
Q107 (2/2) XN6401-TW
IC109 (1/2) TC4052BFT (EL)
Q109 2SA1576A-T106-QR
IC110 TC4W53FU (TE12R)
Q110 2SA1576A-T106-QR
Q111 2SC4081T106R
CN101 (57/100) R-Y IN
DPR-141.2-43
R-Y (VF)
R-Y (CCZ)
R-Y CLP LEV
R-Y BST
CN101 (54/100) 27MHz (X) IN
CN101 (53/100) 27MHz (G) IN
DPR-141.2-48
DPR-141.2-47
Q118 2SC4081T106R
Q119 2SC4081T106R
Q120 (1/2) XN4601-TW
Q120 (2/2) XN4601-TW
Q121 (1/2) XN6401-TW
Q121 (2/2) XN6401-TW
IC109 (2/2) TC4052BFT (EL)
Q122 2SA1576A-T106-QR
IC112 TC4W53FU (TE12R)
Q123 2SA1576A-T106-QR
Q124 2SC4081T106R
CN101 (58/100) B-Y IN
DPR-141.2-44
B-Y (VF)
B-Y (CCZ)
B-Y CLP LEV
B-Y BST
4/4 VD IN
4/4 HD IN
VD
HD
Q129 2SC4081T106R
Q130 2SC4081T106R
Q131 XN6401-TW
Q132 XN6401-TW
Q133 XN6534-TW
Q134 XN4601-TW
IC116 TC7S04FU (TE85R)
Q135 XN4601-TW
Q136 2SC4081T106R
Q137 2SC4081T106R
IC117 (1/3) TC74HC4053 AFT (EL)
IC117 (2/3) TC74HC4053 AFT (EL)
IC117 (3/3) TC74HC4053 AFT (EL)
Q138 XN4601-TW
Q139 (1/2) XN6401-TW
Q139 (2/2) XN6401-TW
Q154 XN6501-TW
Q155 2SA1576A-T106-QR
Q140 2SA1576A-T106-QR
Q141 2SC4081T106R
CN101 (60/100) Y IN
DPR-141.2-42
CN101 (59/100) AGND
BLKG
SYNC
SYNC (VF)
Y (CCZ)
SETUP ON/OFF
SETUP LEV
Y CLP LEV

4-34

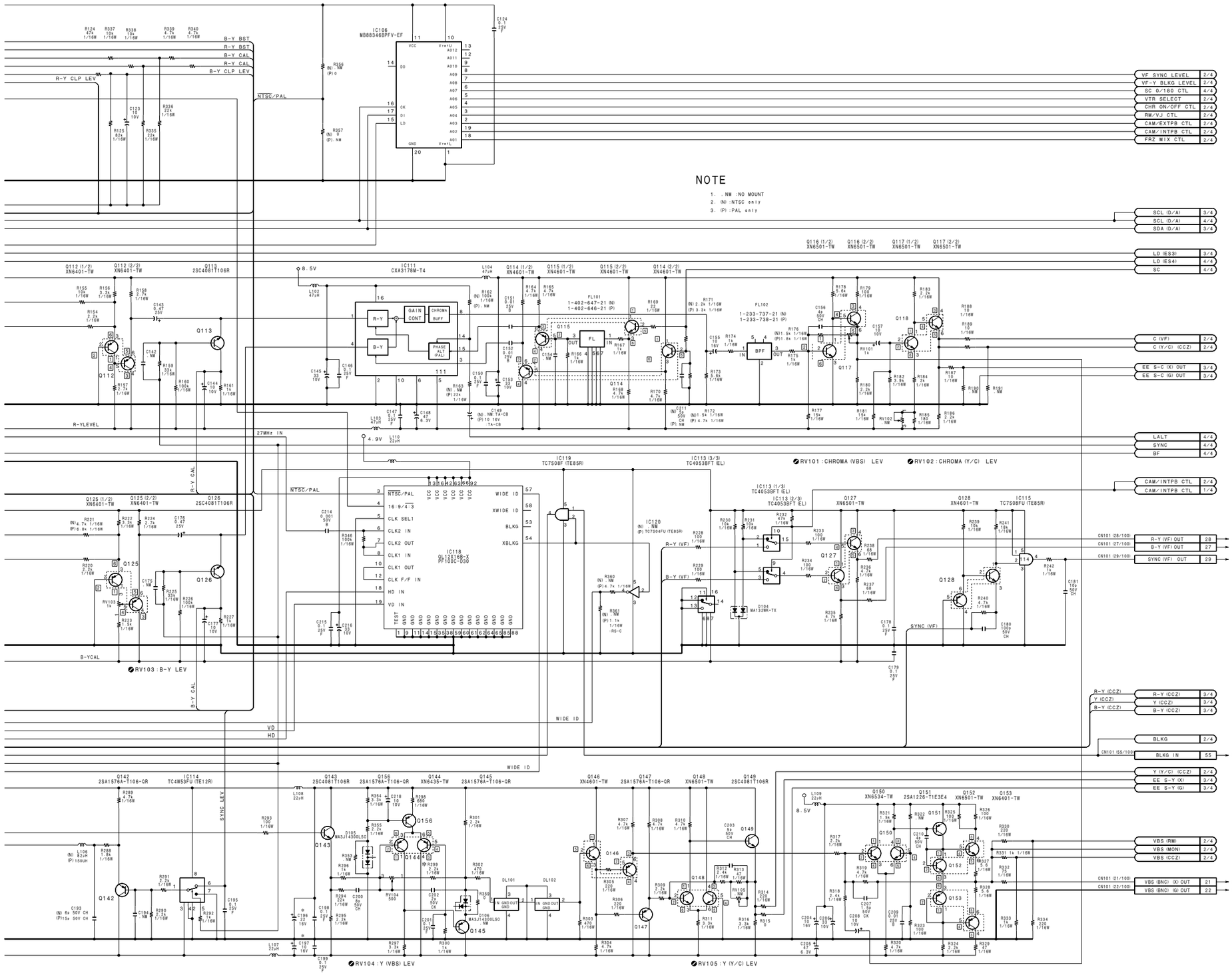

NOTE
*

REF NO.	CHANGE INFORMATION	SERIAL NO./LOT
C127 C128 C160 C161 C196 C197	10V → 16V	221
R299	2k → 2.2k	FOR DSR-500WS/500WSP (UC) 12001- (J) 32001- (CE) 42001-

REF	NTSC	PAL
C149	.NM:TA-CB	10 16V:TA-CB
C192	39p	82p
C193	6p	15p
C211	5p 50V CH	.NM
C217	3p	47p
IC120	.NM	TC7S04FU (TE85R)
L106	82UH	150UH
R162	100k 1/16W	.NM
R163	.NM	22k 1/16W
R171	2.2k	3.3k
R172	1.5k	4.7k
R176	1.5k	1.8k
R221	4.7k	6.8k
R281	270	300:RS-C
R282	16 1/16W	0
R284	33	75:RS-C
R349	5.6k	3.9k
R356	.NM	0
R357	0	.NM
R360	.NM	4.7k 1/16W
R361	NM	1.1k 1/16W:RS-C
FL101	1-402-647-21	1-402-646-21
FL102	1-233-737-21	1-233-738-21

ES-26 (1/4)
BOARD NO. 1-673-964-11, 12
B-DSR500WS-ES26-SM

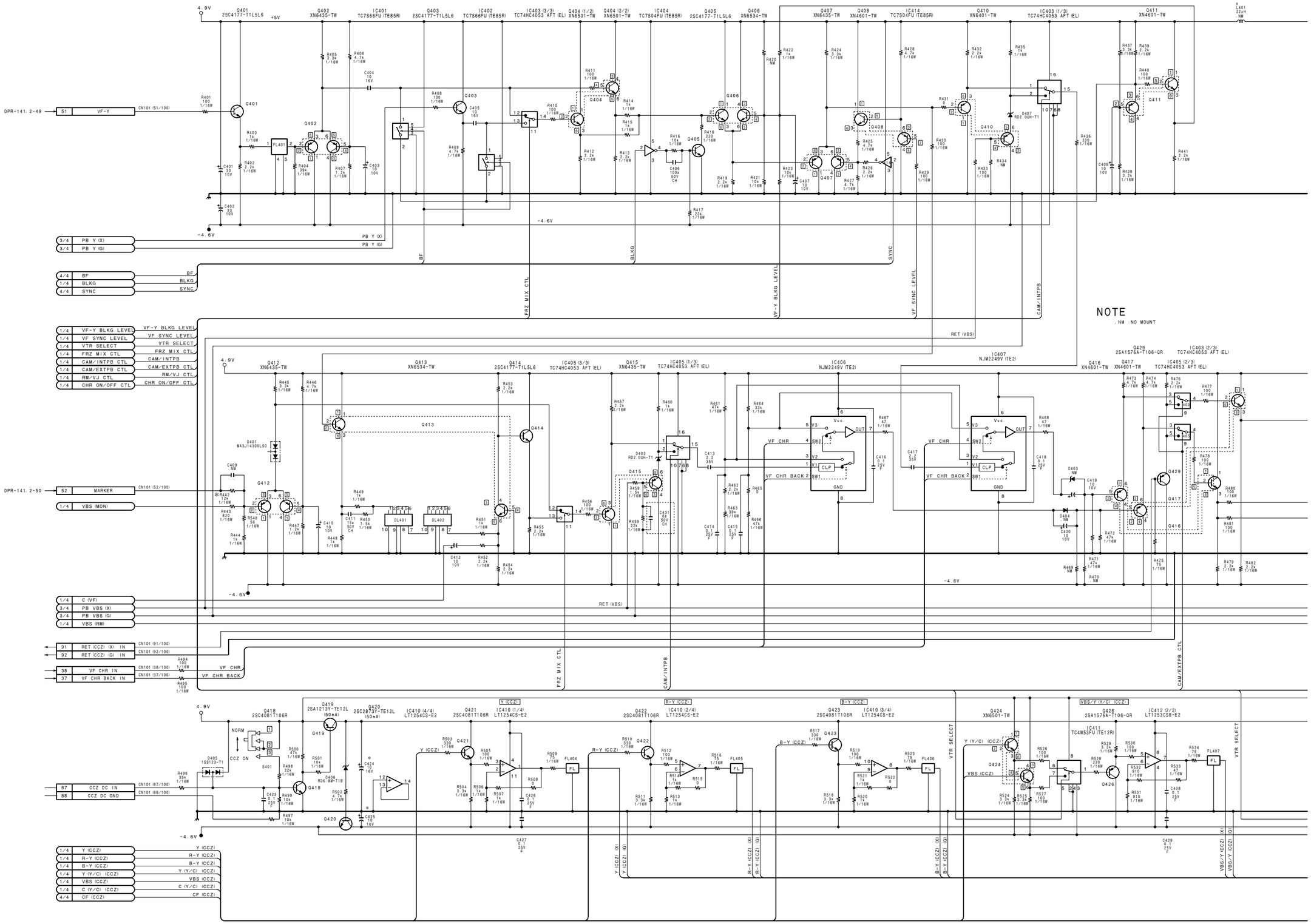
4.9V
+5V
-4.6V
Q401 2SC4177-T1L5L6
Q402 XN6435-TW
IC401 TC7S66FU (TE85R)
Q403 2SC4177-T1L5L6
IC402 TC7S66FU (TE85R)
IC403 (3/3) TC74HC4053 AFT (EL)
Q404 (1/2) XN6501-TW
Q404 (2/2) XN6501-TW
IC404 TC7S04FU (TE85R)
Q405 2SC4177-T1L5L6
Q406 XN6534-TW
Q407 XN6435-TW
Q408 XN4601-TW
IC414 TC7S04FU (TE85R)
Q410 XN6401-TW
IC403 (1/3) TC74HC4053 AFT (EL)
Q411 XN4601-TW
L401 22uH NM
DPR-141. 2-49
51 VF-Y
CN101 (51/100)
3/4 PB Y (X)
3/4 PB Y (G)
4/4 BF
1/4 BLKG
4/4 SYNC
BF
BLKG
SYNC
FRZ MIX CTL
VF-Y BLKG LEVEL
VF SYNC LEVEL
CAM/INTPB
RET (VBS)
1/4 VF-Y BLKG LEVEL
1/4 VF SYNC LEVEL
1/4 VTR SELECT
1/4 FRZ MIX CTL
1/4 CAM/INTPB
1/4 CAM/EXTPB CTL
1/4 RM/VJ CTL
1/4 CHR ON/OFF CTL
NOTE
.NM :NO MOUNT
Q412 XN6435-TW
Q413 XN6534-TW
Q414 2SC4177-T1L5L6
IC405 (3/3) TC74HC4053 AFT (EL)
Q415 XN6435-TW
IC405 (1/3) TC74HC4053 AFT (EL)
IC406 NJM2249V (TE2)
IC407 NJM2249V (TE2)
Q416 XN4601-TW
Q417 XN4601-TW
Q429 2SA1576A-T106-QR
IC405 (2/3) TC74HC4053 AFT (EL)
D401 MA3J14300LSG
D402 RD2.0UM-T1
D403 NM
D404 NM
D405 1SS123-T1
D406 RD6.8M-T1B
DL401
DL402
VF_CHR
VF_CHR_BACK
FRZ MIX CTL
CAM/INTPB
CAM/EXTPB CTL
VF_CHR
VF_CHR_BACK
RET (VBS)
DPR-141. 2-50
52 MARKER
1/4 VBS (MON)
1/4 C (VF)
3/4 PB VBS (X)
3/4 PB VBS (G)
1/4 VBS (RM)
91 RET (CCZ) (X) IN
92 RET (CCZ) (G) IN
38 VF_CHR IN
37 VF_CHR BACK IN
CN101 (91/100)
CN101 (92/100)
CN101 (38/100)
CN101 (37/100)
87 CCZ DC IN
88 CCZ DC GND
CN101 (87/100)
CN101 (88/100)
1/4 Y (CCZ)
1/4 R-Y (CCZ)
1/4 B-Y (CCZ)
1/4 Y (Y/C) (CCZ)
1/4 VBS (CCZ)
1/4 C (Y/C) (CCZ)
4/4 CF (CCZ)
Y (CCZ)
R-Y (CCZ)
B-Y (CCZ)
Y (Y/C) (CCZ)
VBS (CCZ)
C (Y/C) (CCZ)
CF (CCZ)
Q418 2SC4081T106R
Q419 2SA1213Y-TE12L (50mA)
Q420 2SC2873Y-TE12L (50mA)
IC410 (4/4) LT1254CS-E2
Q421 2SC4081T106R
IC410 (1/4) LT1254CS-E2
Q422 2SC4081T106R
IC410 (2/4) LT1254CS-E2
Q423 2SC4081T106R
IC410 (3/4) LT1254CS-E2
Q424 XN6501-TW
IC411 TC4W53FU (TE12R)
Q426 2SA1576A-T106-QR
IC412 (2/2) LT1253CS8-E2
Y (CCZ)
R-Y (CCZ)
B-Y (CCZ)
VBS/Y (Y/C) (CCZ)
VTR SELECT
NORM
CCZ ON
S401
FL404
FL405
FL406
FL407

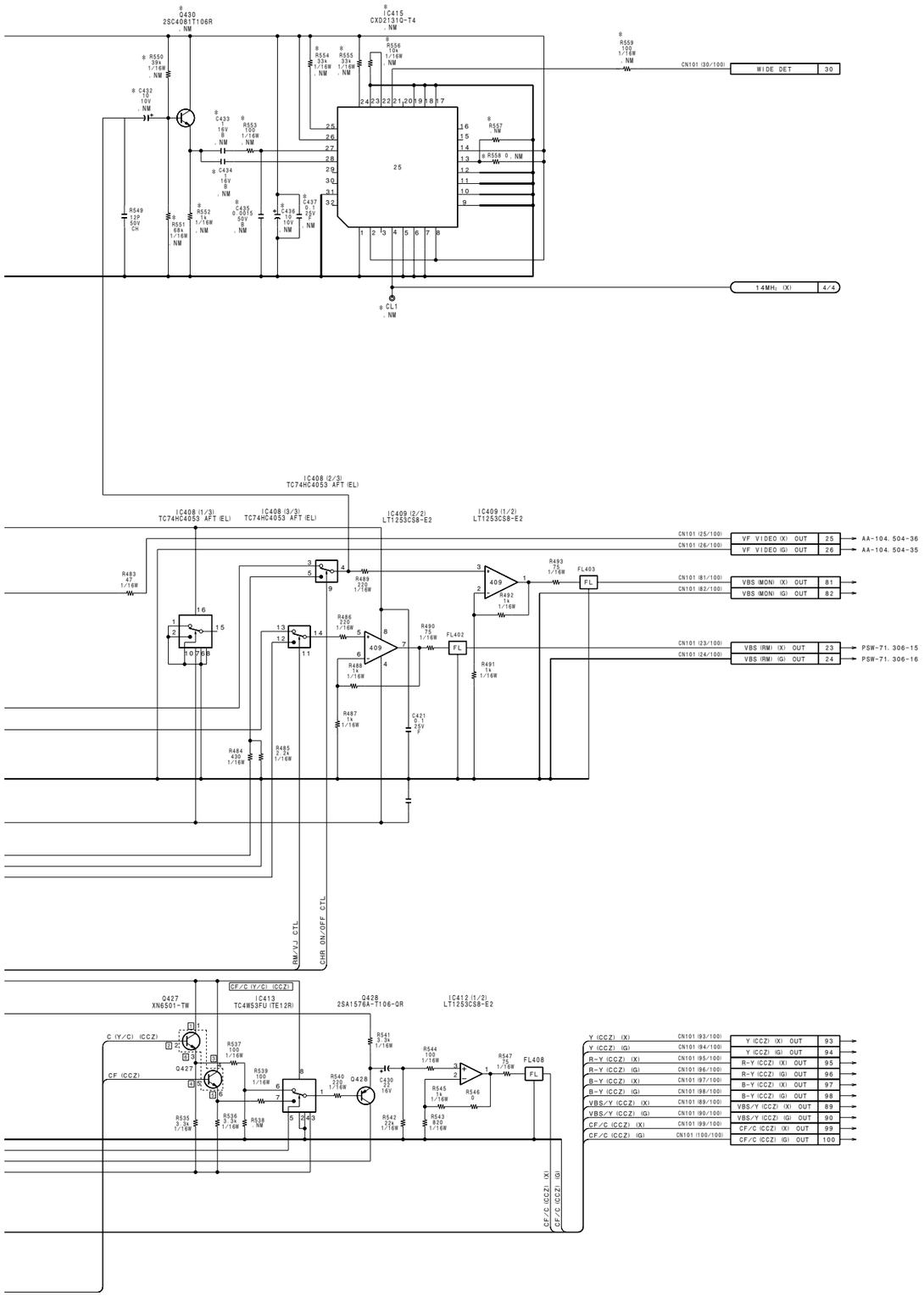

NOTE
*

REF NO.	CHANGE INFORMATION	SERIAL NO./LOT
C424 C425	10V → 16V	221
R442	7.5k → 12k	FOR DSR-500WS/500WSP (UC) 12001- (J) 32001- (CE) 40686-
C432	10u → DELETE	FOR DSR-500WS/500WSP (UC) 12586- (J) 32206- (CE) 43406-
C433 C434	1u → DELETE	
C435	0.0015u → DELETE	
C436	10u → DELETE	
C437	0.1u → DELETE	
IC415	CXD2131Q-T4 → DELETE	
L401	22uH → DELETE	
Q430	2SC4081-R → DELETE	
R549	100k → 12pF	
R550	39k → DELETE	
R551	68k → DELETE	
R552	1k → DELETE	
R553	100 → DELETE	
R554 R555	39k → DELETE	
R556	10k → DELETE	
R558	0 → DELETE	
R559	100 → DELETE	

ES-26 (2/4)
BOARD NO. 1-673-964-11, 12
B-DSR500WS-ES26-SM

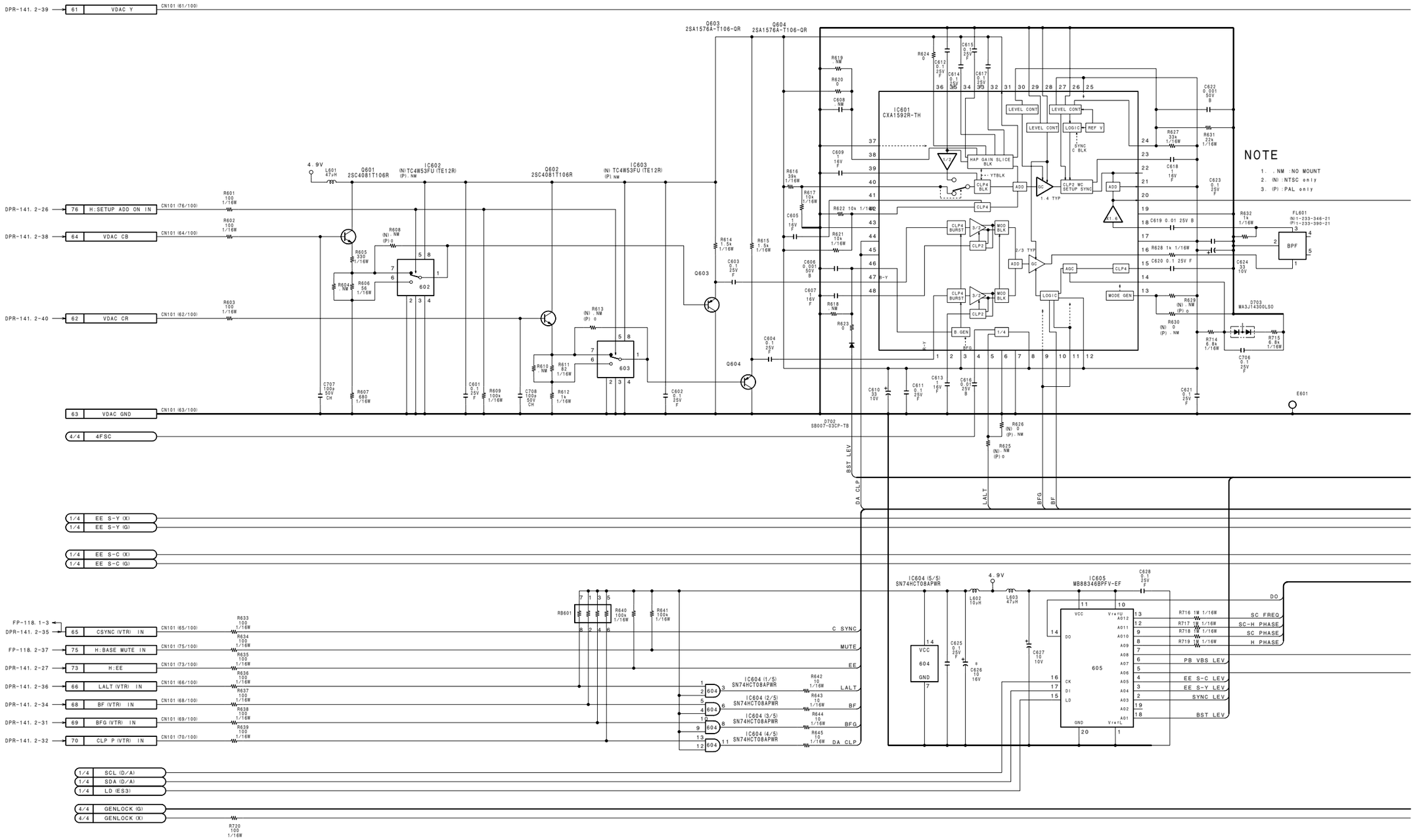
NOTE
1. , , NM : NO MOUNT
2. (N) : NTSC only
3. (P) : PAL only
IC601 CXA1592R-TH
IC602 (N) TC4W53FU (TE12R) (P) NM
IC603 (N) TC4W53FU (TE12R) (P) NM
Q601 2SC4081T106R
Q602 2SC4081T106R
Q603 2SA1576A-T106-QR
Q604 2SA1576A-T106-QR
IC604 (1/5) SN74HCT08APWR
IC604 (2/5) SN74HCT08APWR
IC604 (3/5) SN74HCT08APWR
IC604 (4/5) SN74HCT08APWR
IC604 (5/5) SN74HCT08APWR
IC605 MB88346BPFV-EF
D702 SB007-03CP-TB
D703 MA3J14300LS0
FL601 (N) 1-233-346-21 (P) 1-233-390-21
RB601
DPR-141. 2-39 61 VDAC Y CN101 (61/100)
DPR-141. 2-26 76 H.SETUP ADD ON IN CN101 (76/100)
DPR-141. 2-38 64 VDAC CB CN101 (64/100)
DPR-141. 2-40 62 VDAC CR CN101 (62/100)
63 VDAC GND CN101 (63/100)
4/4 4FSC
1/4 EE S-Y (X)
1/4 EE S-Y (G)
1/4 EE S-C (X)
1/4 EE S-C (G)
FP-118. 1-3 DPR-141. 2-35 65 CSYNC (VTR) IN CN101 (65/100)
FP-118. 2-37 75 H.BASE MUTE IN CN101 (75/100)
DPR-141. 2-27 73 H.EE CN101 (73/100)
DPR-141. 2-36 66 LALT (VTR) IN CN101 (66/100)
DPR-141. 2-34 68 BF (VTR) IN CN101 (68/100)
DPR-141. 2-31 69 BFG (VTR) IN CN101 (69/100)
DPR-141. 2-32 70 CLP P (VTR) IN CN101 (70/100)
1/4 SCL (D/A)
1/4 SDA (D/A)
1/4 LD (ES3)
4/4 GENLOCK (G)
4/4 GENLOCK (X)
C SYNC
MUTE
EE
LALT
BF
BFG
DA CLP
BST LEV
DO
SC FREQ
SC-H PHASE
SC PHASE
H PHASE
PB VBS LEV
EE S-C LEV
EE S-Y LEV
SYNC LEV
BST LEV

ES-26 (3/4)

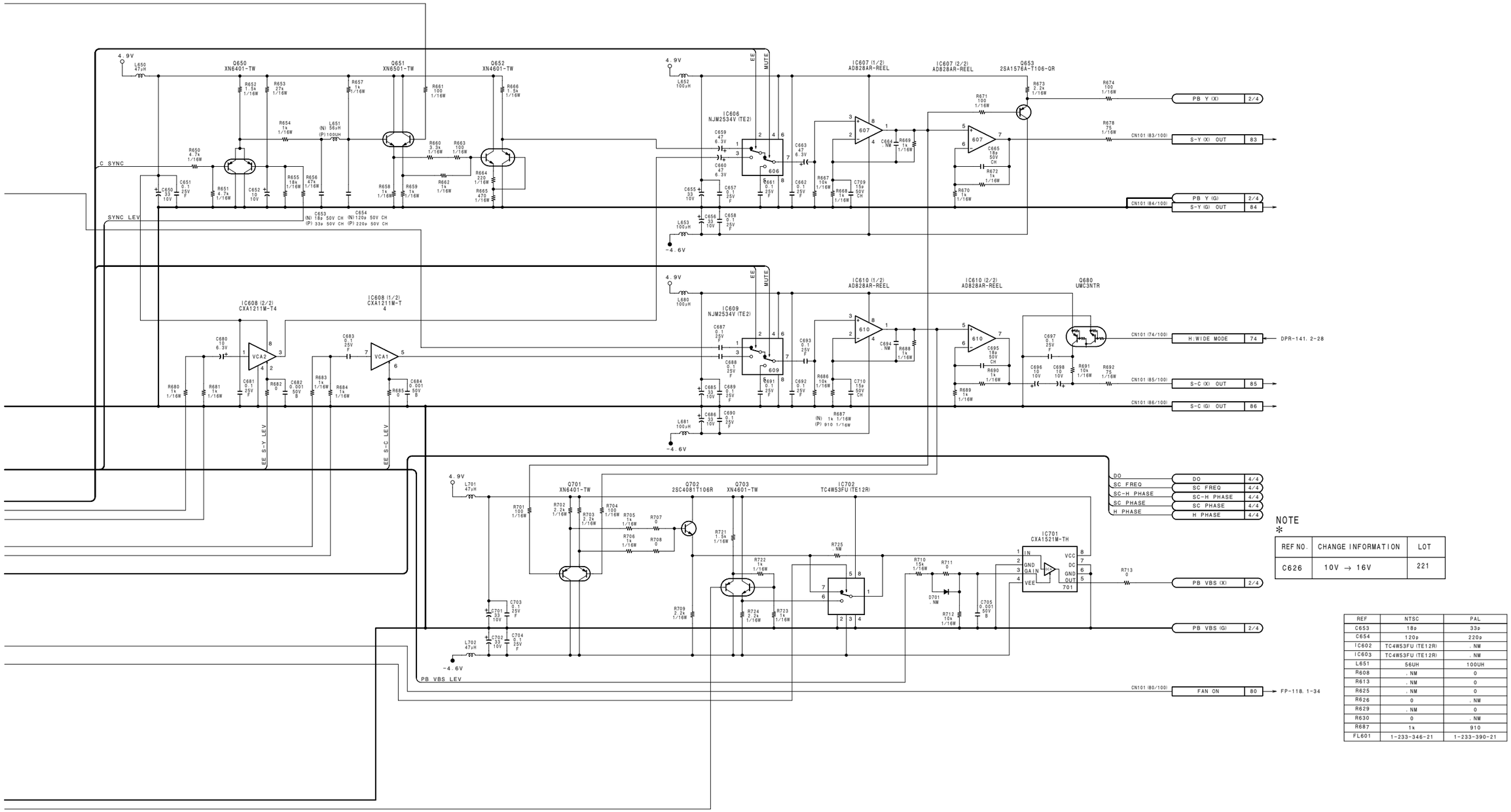

NOTE
*

REF NO.	CHANGE INFORMATION	LOT
C626	10V → 16V	221

REF	NTSC	PAL
C653	18p	33p
C654	120p	220p
IC602	TC4W53FU (TE12R)	. NM
IC603	TC4W53FU (TE12R)	. NM
L651	56UH	100UH
R608	. NM	0
R613	. NM	0
R625	. NM	0
R626	0	. NM
R629	. NM	0
R630	0	. NM
R687	1k	910
FL601	1-233-346-21	1-233-390-21

ES-26 (3/4)

BOARD NO. 1-673-964-11, 12

B-DSR500WS-ES26-SM

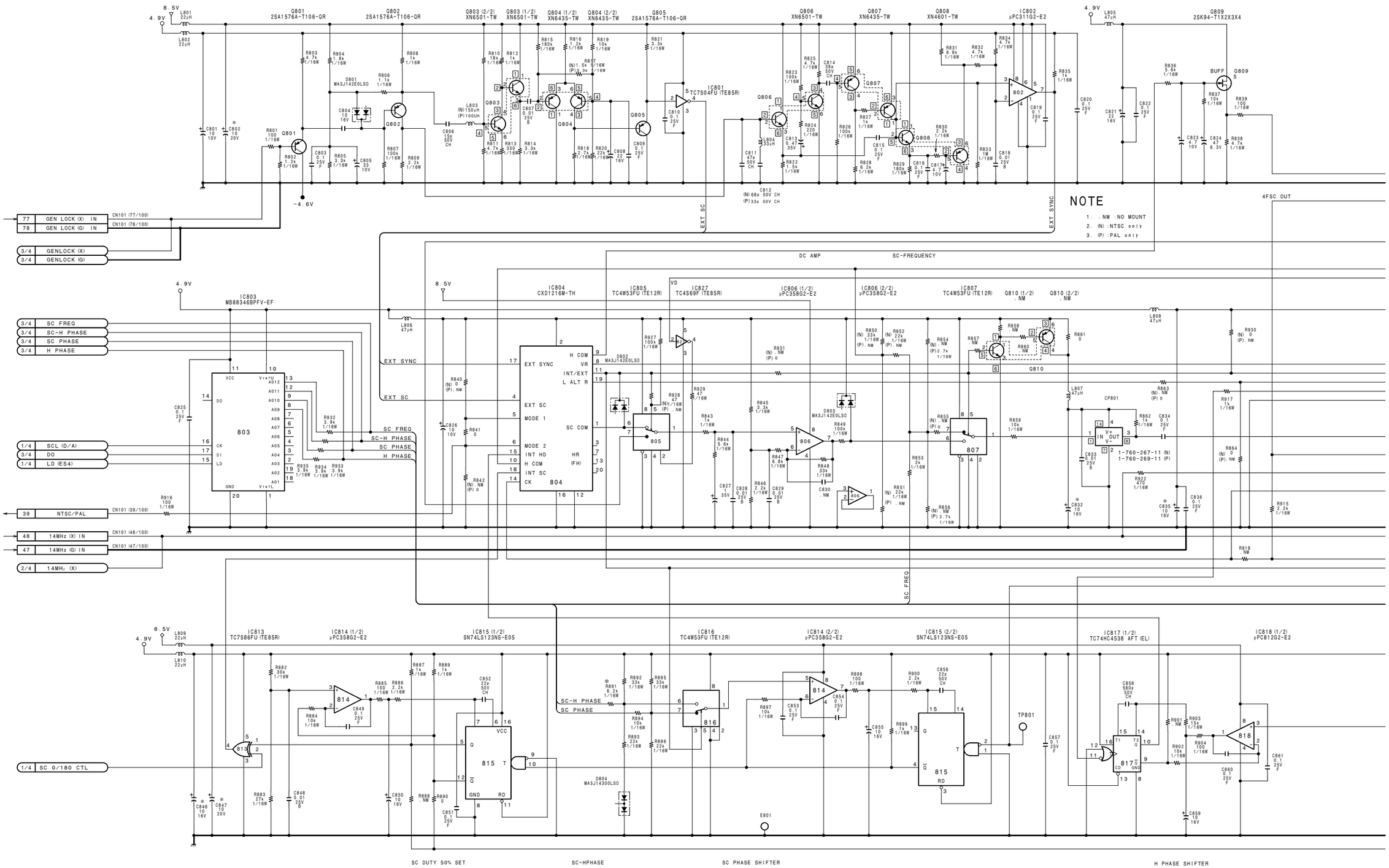
Q801 2SA1576A-T106-QR
Q802 2SA1576A-T106-QR
Q803 (2/2) XN6501-TW
Q803 (1/2) XN6501-TW
Q804 (1/2) XN6435-TW
Q804 (2/2) XN6435-TW
Q805 2SA1576A-T106-QR
Q806 XN6501-TW
Q807 XN6435-TW
Q808 XN4601-TW
IC802 µPC311G2-E2
Q809 2SK94-T1X2X3X4
IC801 TC7S04FU (TE85R)
NOTE
1. . NM : NO MOUNT
2. (N) : NTSC only
3. (P) : PAL only
EXT SC
EXT SYNC
4FSC OUT
GEN LOCK (X) IN
GEN LOCK (G) IN
CN101 (77/100)
CN101 (78/100)
GENLOCK (X)
GENLOCK (G)
DC AMP
SC-FREQUENCY
IC803 MB88346BPFV-EF
IC804 CXD1216M-TH
IC805 TC4W53FU (TE12R)
IC827 TC4S69F (TE85R)
IC806 (1/2) µPC358G2-E2
IC806 (2/2) µPC358G2-E2
IC807 TC4W53FU (TE12R)
Q810 (1/2) . NM
Q810 (2/2) . NM
SC FREQ
SC-H PHASE
SC PHASE
H PHASE
SCL (D/A)
DO
LD (ES4)
NTSC/PAL
14MHz (X) IN
14MHz (G) IN
14MHz (X)
SC 0/180 CTL
IC813 TC7S86FU (TE85R)
IC814 (1/2) µPC358G2-E2
IC815 (1/2) SN74LS123NS-E05
IC816 TC4W53FU (TE12R)
IC814 (2/2) µPC358G2-E2
IC815 (2/2) SN74LS123NS-E05
IC817 (1/2) TC74HC4538 AFT (EL)
IC818 (1/2) µPC812G2-E2
TP801
E801
SC DUTY 50% SET
SC-HPHASE
SC PHASE SHIFTER
H PHASE SHIFTER

ES-26 (4/4)

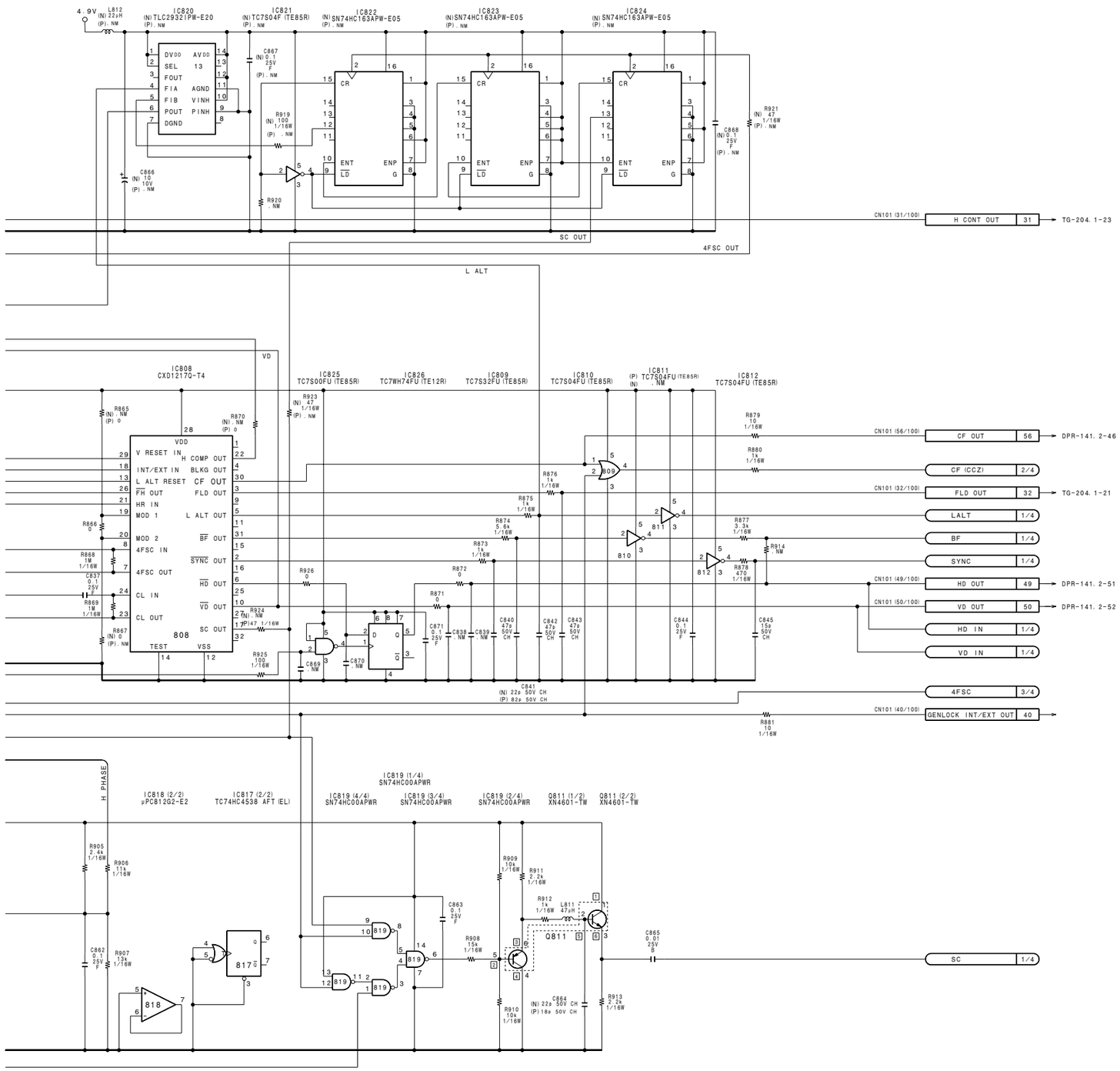

NOTE
*

REF NO.	CHANGE INFORMATION	SERIAL NO./LOT
C802 C847	16V → 20V	221
C832 C835 C846	10V → 16V	
R891	10k → 6.2k	FOR DSR-500WS/500WSP (UC) 12001- (J) 32001- (CE) 40686

REF	NTSC	PAL
C812	68p	33p
C841	22p	82p
C864	22p	18p
C866	10 10V	. NM
C867	0.1 25V F	. NM
C868	0.1 25V F	. NM
IC811	. NM	TC7S04FU (TE85R)
IC820	TLC2932IPW-E20	. NM
IC821	TC7S04F (TE85R)	. NM
IC822	SN74HC163APW-E05	. NM
IC823	SN74HC163APW-E05	. NM
IC824	SN74HC163APW-E05	. NM
L803	150UH	100UH
L812	22UH	. NM
R817	1.5k 1/16W	3.3k 1/16W
R840	0	. NM
R842	. NM	0
R850	33k 1/16W	. NM
R851	22k 1/16W	. NM
R852	22k 1/16W	. NM
R854	. NM	2.7k 1/16W
R855	. NM	0
R856	. NM	2.7k 1/16W
R863	. NM	0
R864	0	. NM
R865	. NM	0
R867	0	. NM
R870	. NM	0
R919	100 1/16W	. NM
R921	47 1/16W	. NM
R923	47 1/16W	. NM
R924	. NM	47 1/16W
R928	47 1/16W	. NM
R930	0	. NM
R931	. NM	0
CP801	1-760-267-11	1-760-269-11

ES-26 (4/4)
BOARD NO. 1-673-964-11, 12
B-DSR500WS-ES26-SM

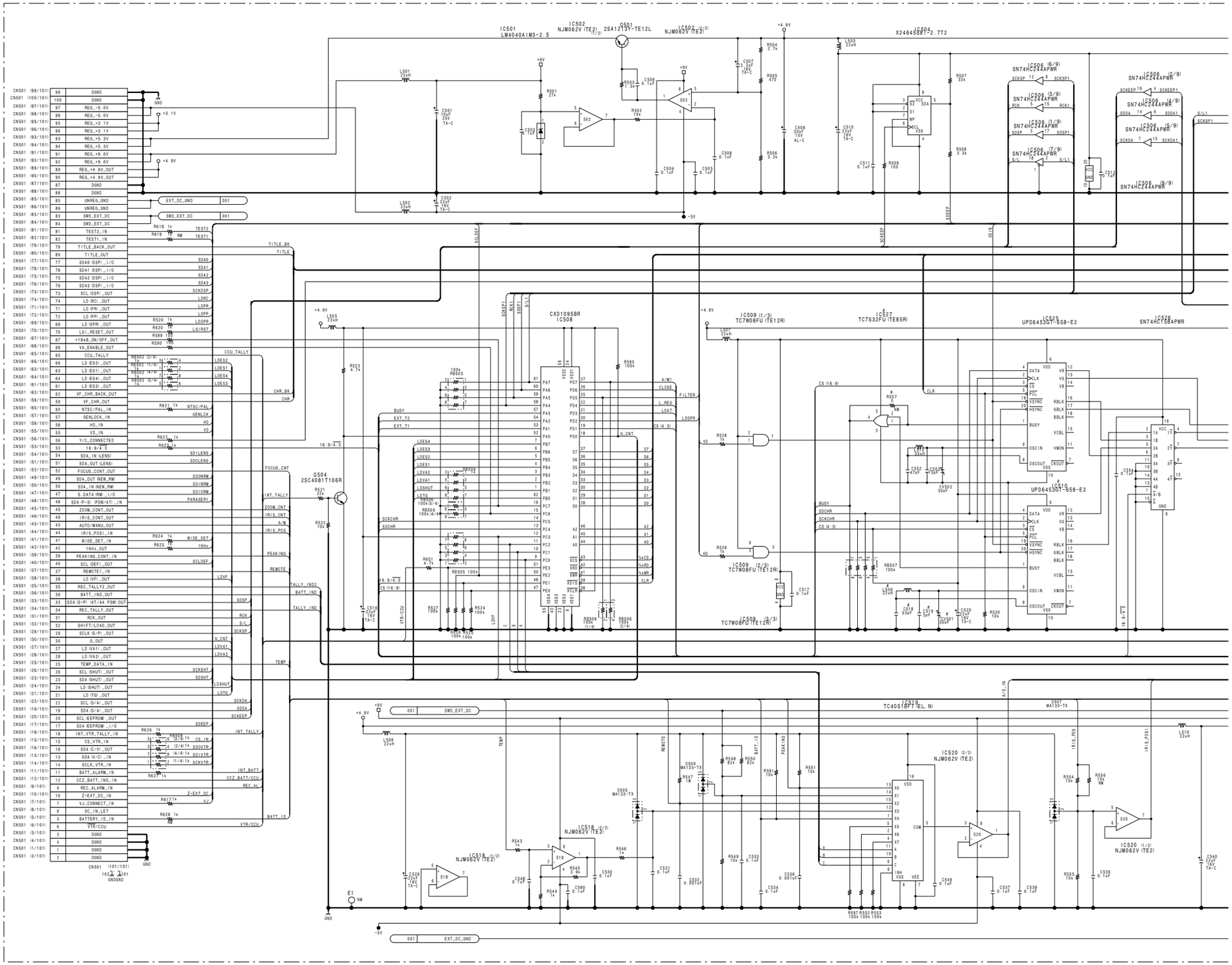
IC501 LM4040AIM3-2.5
IC502 NJM062V (TE2) (1/2)
Q501 2SA1213Y-TE12L
IC502 NJM062V (TE2) (2/2)
IC504 X24645S8T-2.7T2
IC506 SN74HC244APWR
IC508 CXD1095BR
IC509 TC7W08FU (TE12R)
IC527 TC7S32FU (TE85R)
IC525 UPD6453GT-658-E2
IC526 SN74HC7S8APWR
IC519 TC4051BFT (EL,N)
IC520 NJM062V (TE2)
IC518 NJM062V (TE2)
Q504 2SC4081T106R
CN501 (99/101) DGND
CN501 (100/101) DGND
CN501 (97/101) REG_-5.0V
CN501 (98/101) REG_-5.0V
CN501 (95/101) REG_+3.1V
CN501 (96/101) REG_+3.1V
CN501 (93/101) REG_+5.3V
CN501 (94/101) REG_+5.3V
CN501 (91/101) REG_+9.0V
CN501 (92/101) REG_+9.0V
CN501 (89/101) REG_+4.9V_OUT
CN501 (90/101) REG_+4.9V_OUT
CN501 (87/101) DGND
CN501 (88/101) DGND
CN501 (85/101) UNREG_GND
CN501 (86/101) UNREG_GND
CN501 (83/101) SWD_EXT_DC
CN501 (84/101) SWD_EXT_DC
CN501 (81/101) TEST2_IN
CN501 (82/101) TEST1_IN
CN501 (79/101) TITLE_BACK_OUT
CN501 (80/101) TITLE_OUT
CN501 (77/101) SDA0 (DSP) _I/O
CN501 (78/101) SDA1 (DSP) _I/O
CN501 (75/101) SDA2 (DSP) _I/O
CN501 (76/101) SDA3 (DSP) _I/O
CN501 (73/101) SCL (DSP) _OUT
CN501 (74/101) LD (RC) _OUT
CN501 (71/101) LD (PR) _OUT
CN501 (72/101) LD (PP) _OUT
CN501 (69/101) LD (DPR) _OUT
CN501 (70/101) LSI_RESET_OUT
CN501 (67/101) +18±8_ON/OFF_OUT
CN501 (68/101) V4_ENABLE_OUT
CN501 (65/101) CCU_TALLY
CN501 (66/101) LD (ES2) _OUT
CN501 (63/101) LD (ES1) _OUT
CN501 (64/101) LD (ES4) _OUT
CN501 (61/101) LD (ES3) _OUT
CN501 (62/101) VF_CHR_BACK_OUT
CN501 (59/101) VF_CHR_OUT
CN501 (60/101) NTSC/PAL_IN
CN501 (57/101) GENLOCK_IN
CN501 (58/101) HD_IN
CN501 (55/101) VD_IN
CN501 (56/101) Y/C_CONNECTED
CN501 (53/101) 16:9/4:3
CN501 (54/101) SDA_IN (LENS)
CN501 (51/101) SDA_OUT (LENS)
CN501 (52/101) FOCUS_CONT_OUT
CN501 (49/101) SDA_OUT (NEW_RM)
CN501 (50/101) SDA_IN (NEW_RM)
CN501 (47/101) S_DATA (RM) _I/O
CN501 (48/101) SDA (P-S) (PSW/AT) _IN
CN501 (45/101) ZOOM_CONT_OUT
CN501 (46/101) IRIS_CONT_OUT
CN501 (43/101) AUTO/MANU_OUT
CN501 (44/101) IRIS_POSI_IN
CN501 (41/101) WIDE_DET_IN
CN501 (42/101) 1KHz_OUT
CN501 (39/101) PEAKING_CONT_IN
CN501 (40/101) SCL (DEF) _OUT
CN501 (37/101) REMOTE1_IN
CN501 (38/101) LD (VF) _OUT
CN501 (35/101) REC_TALLY2_OUT
CN501 (36/101) BATT_IND_OUT
CN501 (33/101) SDA (S-P) (AT/AA_PSW) OUT
CN501 (34/101) REC_TALLY_OUT
CN501 (31/101) RCK_OUT
CN501 (32/101) SHIFT/LOAD_OUT
CN501 (29/101) SCLK (S/P) _OUT
CN501 (30/101) G_OUT
CN501 (27/101) LD (VA1) _OUT
CN501 (28/101) LD (VA2) _OUT
CN501 (25/101) TEMP_DATA_IN
CN501 (26/101) SCL (SHUT) _OUT
CN501 (23/101) SDA (SHUT) _OUT
CN501 (24/101) LD (SHUT) _OUT
CN501 (21/101) LD (TG) _OUT
CN501 (22/101) SCL (D/A) _OUT
CN501 (19/101) SDA (D/A) _OUT
CN501 (20/101) SCL (EEPROM) _OUT
CN501 (17/101) SDA (EEPROM) _I/O
CN501 (18/101) INT_VTR_TALLY_IN
CN501 (15/101) CS_VTR_IN
CN501 (16/101) SDA (C/V) _OUT
CN501 (13/101) SDA (V/C) _IN
CN501 (14/101) SCLK_VTR_IN
CN501 (11/101) BATT_ALARM_IN
CN501 (12/101) CCZ_BATT_IND_IN
CN501 (9/101) REC_ALARM_IN
CN501 (10/101) Z-EXT_DC_IN
CN501 (7/101) VJ_CONNECT_IN
CN501 (8/101) DC_IN_LET
CN501 (5/101) BATTERY_ID_IN
CN501 (6/101) VTR/CCU
CN501 (3/101) DGND
CN501 (4/101) DGND
CN501 (1/101) DGND
CN501 (2/101) DGND
CN501 (101/101)
EXT_DC_GND
SWD_EXT_DC
TITLE_BK
TITLE
CCU_TALLY
CHR_BK
CHR
16:9/4:3
FOCUS_CNT
INT_TALLY
ZOOM_CNT
IRIS_CNT
A/M
IRIS_POS
PEAKING
REMOTE
TALLY_IND2
BATT_IND
TALLY_IND
TEMP
INT_BATT
CCZ_BATT/CCU
REC_AL
BATT_ID
VTR/CCU
SCKCHR
SDCHR
SCLOEF
WIDE_DET
1KHz
SDSP
SCKSP
SDOEP
SDOVTR
SDIVTR
SCKVTR
SDILENS
SDOLENS
SDONRM
SDINRM
SDIORM
PARASER1
SCKSNT
SDSNT
LDSHUT
LDTG
SCKDA
SDDA
SCKEEP
INT_TALLY
Z-EXT_DC
VJ
NTSC/PAL
GENLCK
HD
VD
CS_IN
LDVF
LDVA1
LDVA2
G_CNT
LDES1
LDES2
LDES3
LDES4
BUSY
EXT_T2
EXT_T1
LDSHUT
LDTG
LDPR
LDPP
LDPPR
LSIRST
LOAC
A/M1
CLOSE
L_RES
LDAT
FILTER
LDDPR
CS (4:3)
CS (16:9)
SCLOEF
SDSP
RCK
S/L
SCKSP
SCKSNT
SDSNT
SCKDA
SDDA
SCKEEP
SDOEP
SDOVTR
SDIVTR
SCKVTR
SDILENS
SDOLENS
SDONRM
SDINRM
SDIORM
PARASER1
SCKCHR
SDCHR
SCKSP1
SDSP1
SCKEEP1
SDDA1
SCKDA1
S/L1
RCK1
SCKEEP
SDEEP
VD_IN
A/D_IN
IRIS_POS
IRIS_POS1
CS (16:9)
CLR
BUSY
SDCHR
SCKCHR
CS (4:3)
16:9/4:3
VTR/CCU
GND
+9V
+4.9V
+3.1V
-5V

This circuit diagram is common to DSR-370/370P.

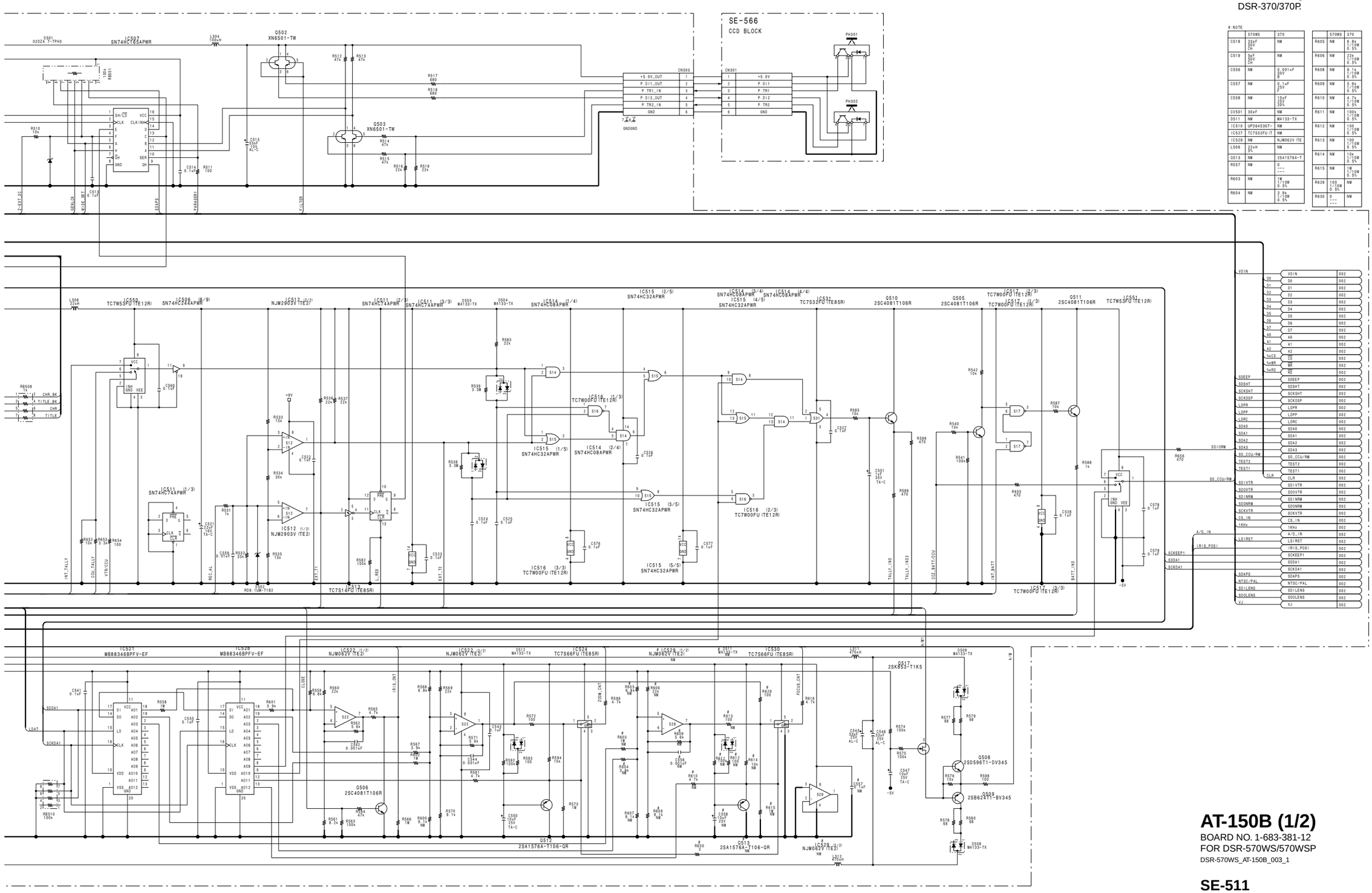

# :NOTE	570WS	370
C518	33nF 50V CH	NM
C519	5pF 50V SH	NM
C556	NM	0.001uF 50V B
C557	NM	0.1uF 25V F
C558	NM	10uF 25V 20%
CV501	30nF	NM
D511	NM	MA133-TX
IC510	UPD6453GT-	NM
IC527	TC7S32FU(TE85R)	NM
IC529	NM	NJM062V(TE2)
L506	22uH 5%	NM
Q513	NM	2SA1576A-T
R557	NM	0 --- ---
R603	NM	1M 1/10W 0.5%
R604	NM	3.9k 1/10W 0.5%

	570WS	370
R605	NM	6.8k 1/10W 0.5%
R606	NM	22k 1/10W 0.5%
R608	NM	9.1k 1/10W 0.5%
R609	NM	9.6k 1/10W 0.5%
R610	NM	4.7k 1/10W 0.5%
R611	NM	100k 1/10W 0.5%
R612	NM	100 1/10W 0.5%
R613	NM	100 1/10W 0.5%
R614	NM	10k 1/10W 0.5%
R615	NM	1M 1/10W 0.5%
R629	100 1/10W 0.5%	NM
R630	0 --- ---	NM

VDIN	
D0	002
D1	002
D2	002
D3	002
D4	002
D5	002
D6	002
D7	002
A0	002
A1	002
A2	002
CS	002
WR	002
RD	002
SDEEP	002
SDSHT	002
SCKSHT	002
SCKDSP	002
LDPR	002
LDPP	002
LDRC	002
SDA0	002
SDA1	002
SDA2	002
SDA3	002
SD_CCU/RW	002
TEST2	002
TEST1	002
CLR	002
SDIVTR	002
SDOVTR	002
SDINRM	002
SDONRM	002
SCKVTR	002
CS_IN	002
1KHz	002
A/D_IN	002
LSIRST	002
IRIS_POSI	002
SCKEEP1	002
SDDA1	002
SCKDA1	002
SDAPS	002
NTSC/PAL	002
SDILENS	002
SDOLENS	002
VJ	002

AT-150B (1/2)

BOARD NO. 1-683-381-12
FOR DSR-570WS/570WSP
DSR-570WS_AT-150B_003_1

SE-511

BOARD NO. 1-673-960-11
B-DSR500WS-AT127-SM

This circuit diagram is common to DSR-370/370P.

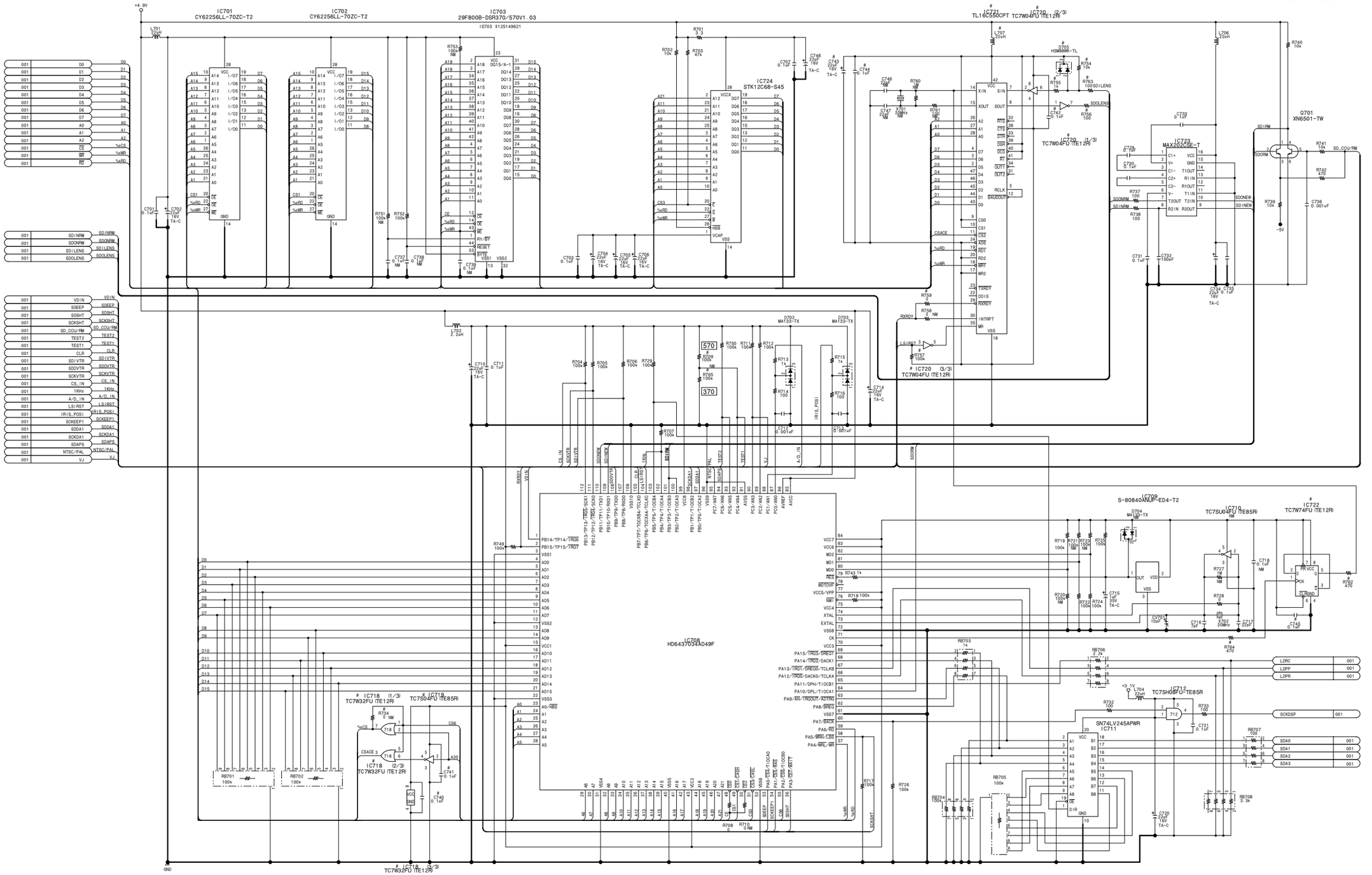

#	NOTE	
	570WS	370
C740	0.1uF 25V	NM
C741	0.1uF 25V	NM
C742	0.1uF 25V	NM
C743	22uF 16V 20%	NM
C744	0.1uF 25V F	NM
C745	0.1uF 25V	NM
D705	HSM88WK-TL	NM
IC718	TC7W32FU /T	NM
IC719	TC7S04FU /T	NM
IC720	TC7W04FU /T	NM
IC721	TL16C550CP	NM
IC722	TC7W74FU /T	NM
L707	22uH	NM
R709	100k 1/10W 0.5%	NM
R734	NM	0 --- ---
R754	10k 1/10W 0.5%	NM
R755	1k 1/10W 0.5%	NM
R756	100 1/10W 0.5%	NM
R757	100k 1/10W 0.5%	NM
R759	0 --- ---	NM
R762	470 1/10W 0.5%	NM
R763	100 1/10W 0.5%	NM
R764	470 1/10W 0.5%	NM
R765	NM	100k 1/10W 0.5%

AT-150B (2/2)
BOARD NO. 1-683-381-12
FOR DSR-570WS/570WSP
DSR-570WS_AT-150B_003_2

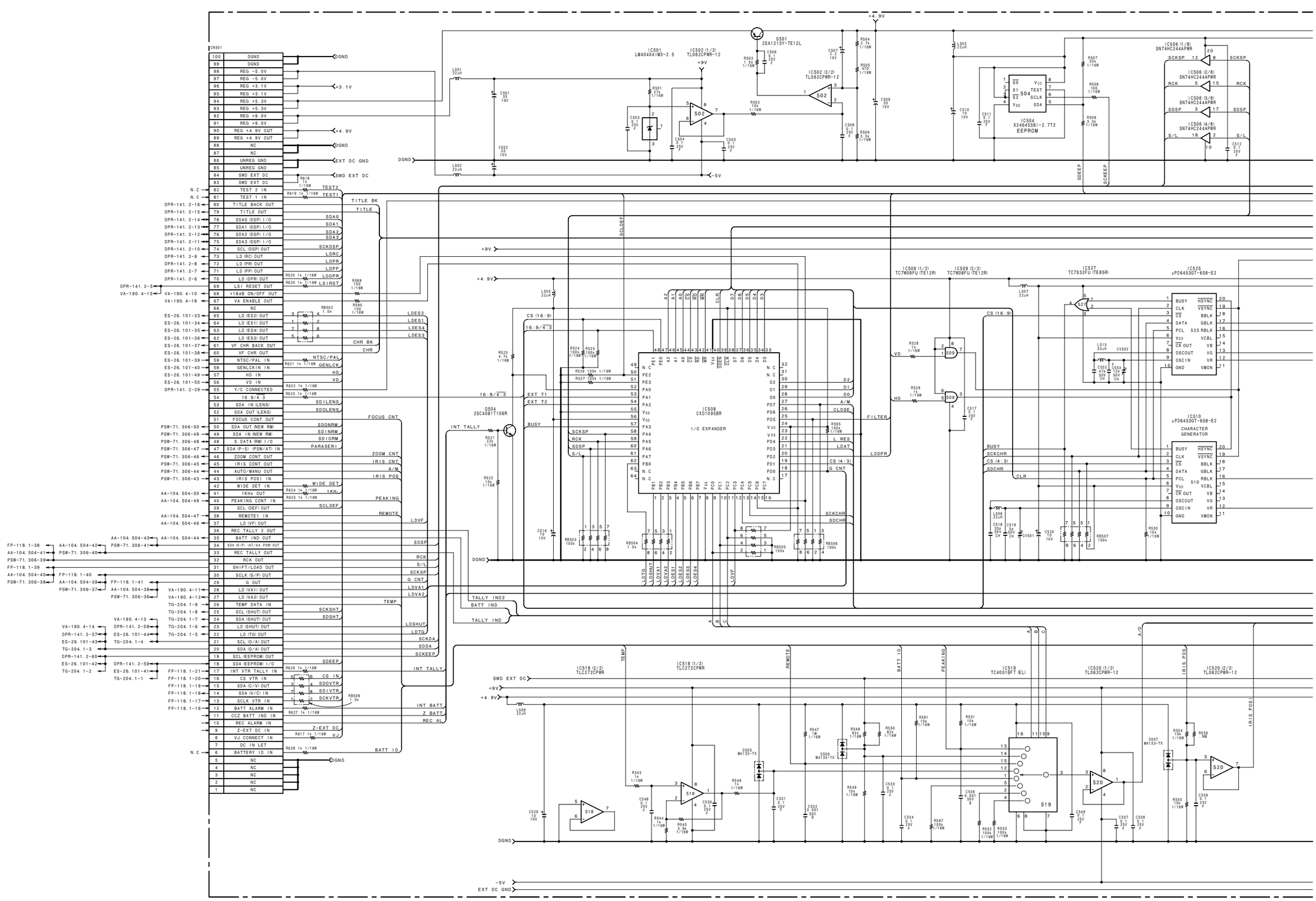
IC501
LM4040AIM3-2.5
IC502 (1/2)
TL062CPWR-12
Q501
2SA1213Y-TE12L
IC502 (2/2)
TL062CPWR-12
IC504
X24645SBI-2.7T2
EEPROM
IC506 (1/8)
SN74HC244APWR
IC506 (2/8)
SN74HC244APWR
IC506 (3/8)
SN74HC244APWR
IC506 (4/8)
SN74HC244APWR
IC508
CXD1095BR
I/O EXPANDER
Q504
2SC4081T106R
IC509 (1/2)
TC7W08FU (TE12R)
IC509 (2/2)
TC7W08FU (TE12R)
IC527
TC7S32FU (TE85R)
IC525
μPD6453GT-658-E2
IC510
μPD6453GT-658-E2
CHARACTER
GENERATOR
IC518 (2/2)
TLC272CPWR
IC518 (1/2)
TLC272CPWR
IC519
TC4051BFT (EL)
IC520 (1/2)
TL062CPWR-12
IC520 (2/2)
TL062CPWR-12
CN501
DGND
+3.1V
+4.9V
EXT DC GND
SWD EXT DC
TITLE BK
TITLE
CHR BK
CHR
NTSC/PAL
GENLCK
HD
VD
SDILENS
SDOLENS
SDONRM
SDINRM
SDIORM
PARASERI
FOCUS CNT
ZOOM CNT
IRIS CNT
A/M
IRIS POS
WIDE DET
1KHz
PEAKING
REMOTE
LDVF
SDSP
RCK
S/L
SCKSP
G CNT
LDVA1
LDVA2
TEMP
SCKSHT
SDSHT
LDSHUT
LDTG
SCKDA
SDDA
SCKEEP
INT TALLY
INT BATT
Z BATT
REC AL
Z-EXT DC
VJ
BATT ID
SDEEP
SCKEEP
SCLDEF
CS (16:9)
16:9/4:3
EXT T1
EXT T2
BUSY
FILTER
LDDPR
CLOSE
L RES
LDAT
CS (4:3)
G CNT
SCKCHR
SDCHR
TALLY IND2
BATT IND
TALLY IND
SWD EXT DC
-5V
EXT DC GND

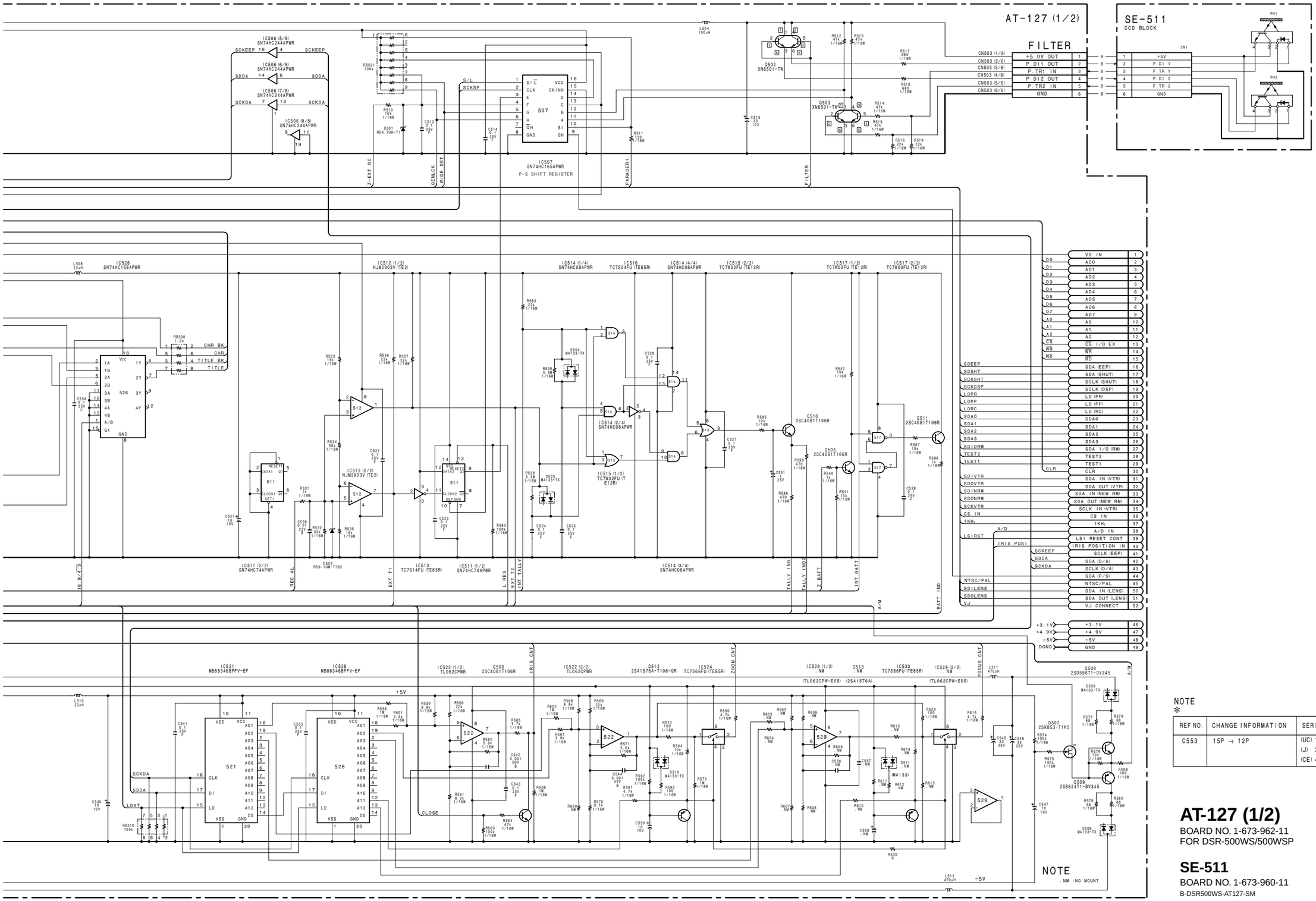

NOTE
*

REF NO.	CHANGE INFORMATION	SERIAL NO.
C553	15P → 12P	(UC) 12496- (J) 32171- (CE) 43091-

AT-127 (1/2)

BOARD NO. 1-673-962-11
FOR DSR-500WS/500WSP

SE-511

BOARD NO. 1-673-960-11
B-DSR500WS-AT127-SM

NOTE
*

REF NO.	CHANGE INFORMATION	SERIAL NO.
IC708	HD6437034SC81F → HD6437034AD49F	(UC) 10731- (J) 30221- (CE) 40371-

NOTE
. NM : NO MOUNT

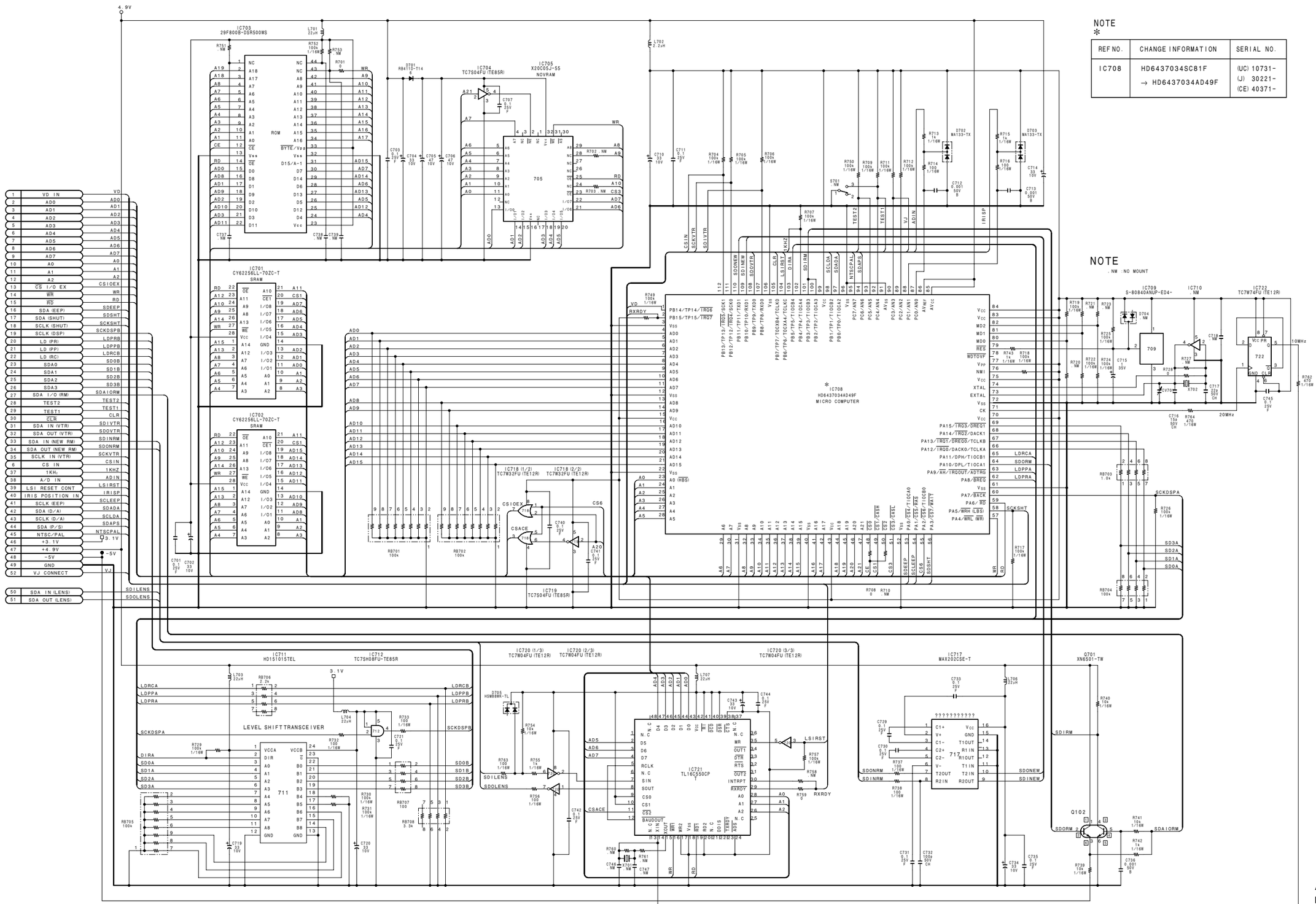

AT-127 (2/2)
BOARD NO. 1-673-962-11
FOR DSR-500WS/500WSP
B-DSR500WS-AT127-SM

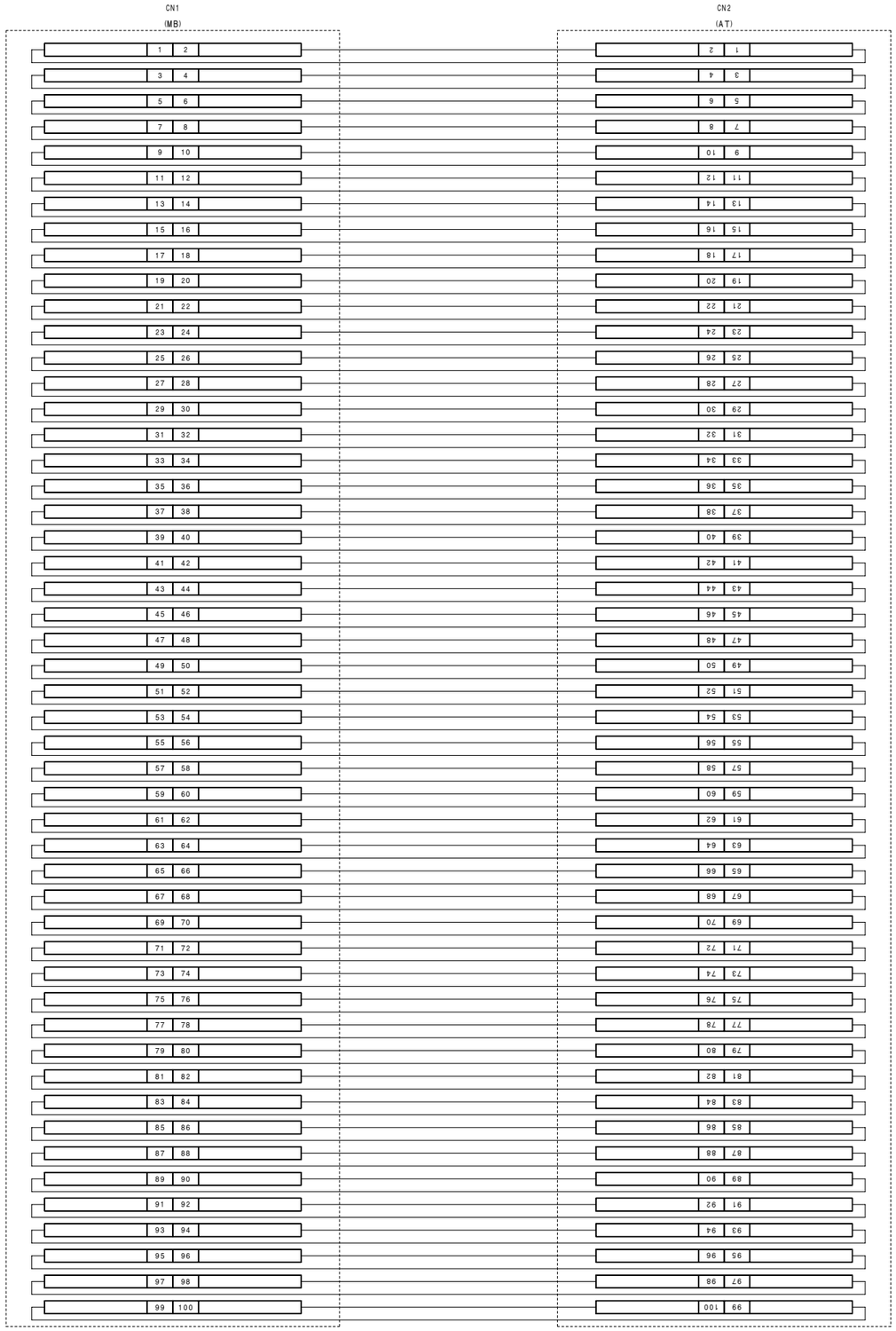

CN-1811
BOARD NO. 1-673-966-11
B-DSR500WS-CN1811-SM

FP-118A/118 (1/6) KY-405

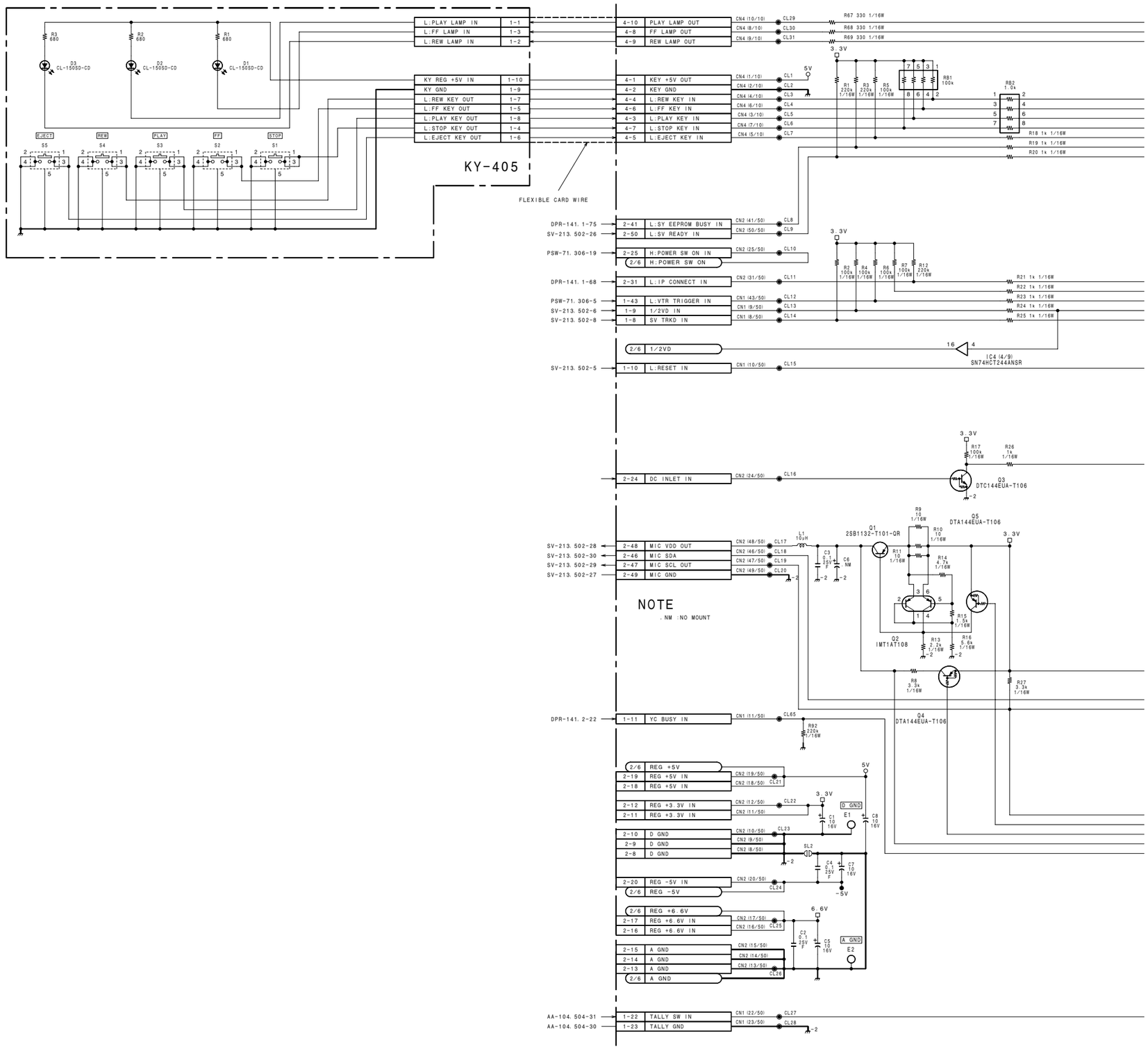

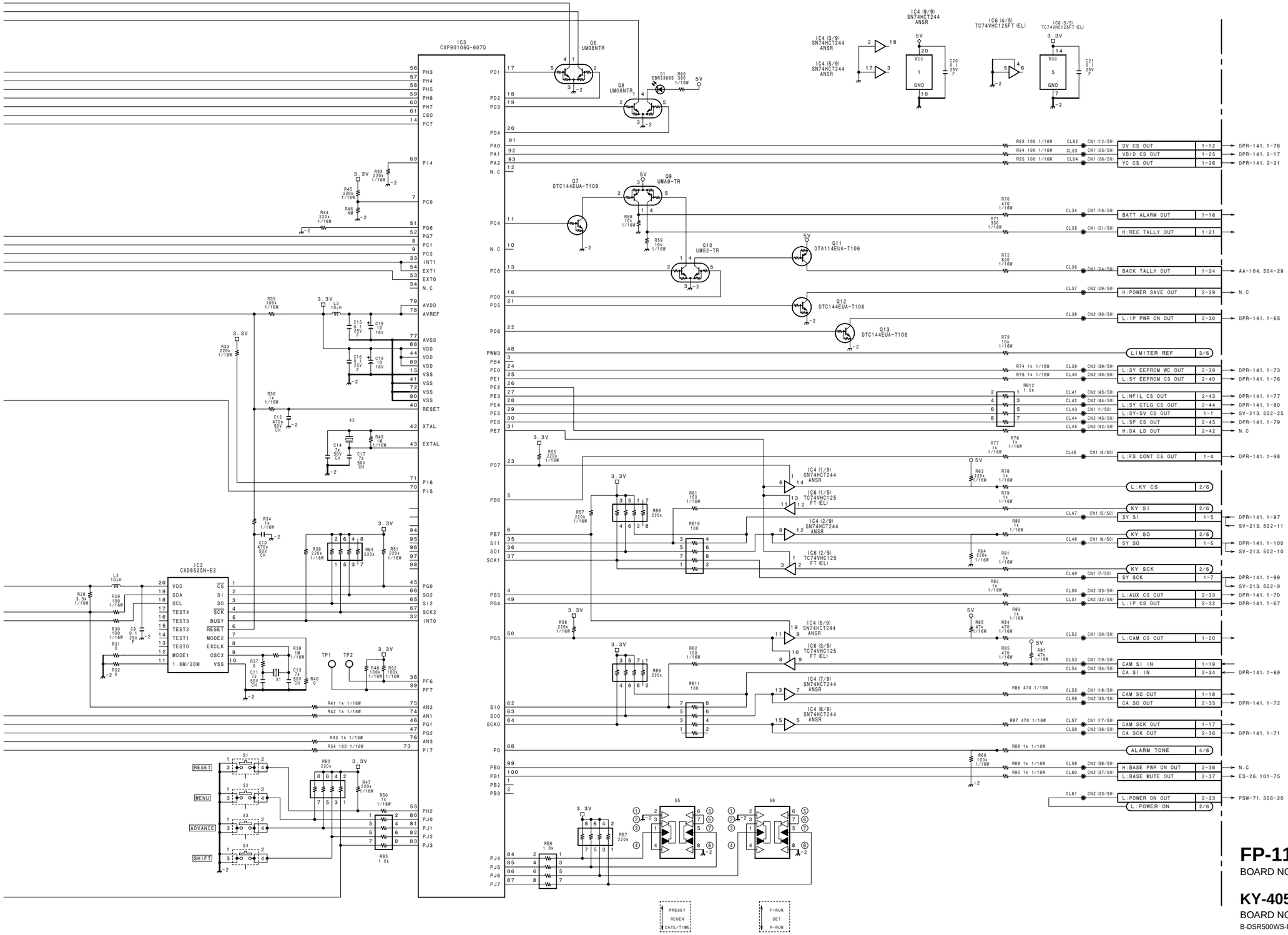

FP-118A/118 (1/6)
BOARD NO. 1-673-967-11, 12, 13

KY-405
BOARD NO. 1-669-105-11
B-DSR500WS-FP118-SM

FP-118A/118 (2/6)

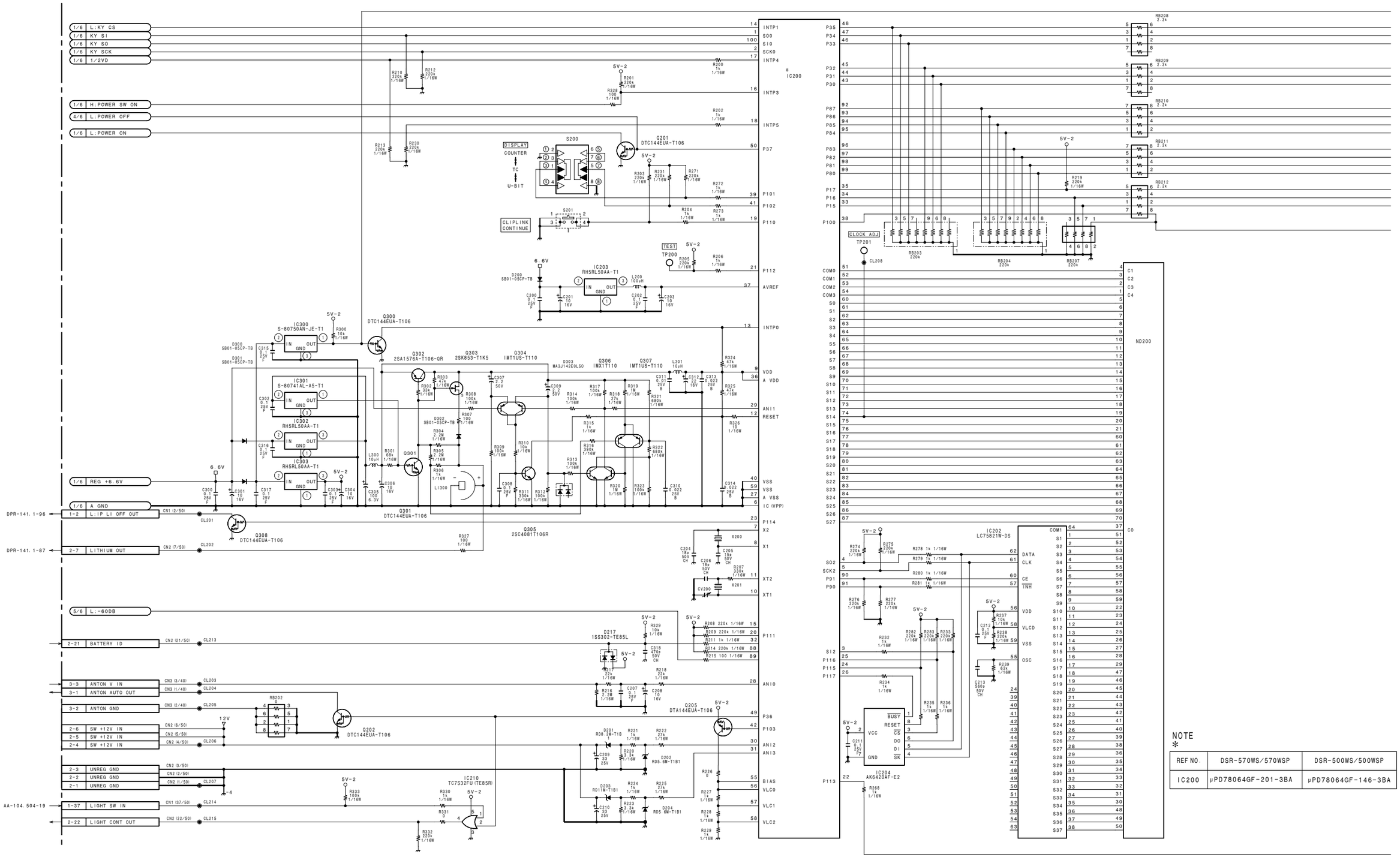

NOTE
*

REF NO.	DSR-570WS/570WSP	DSR-500WS/500WSP
IC200	μPD78064GF-201-3BA	μPD78064GF-146-3BA

4-52

FP-118A/118 (2/6)

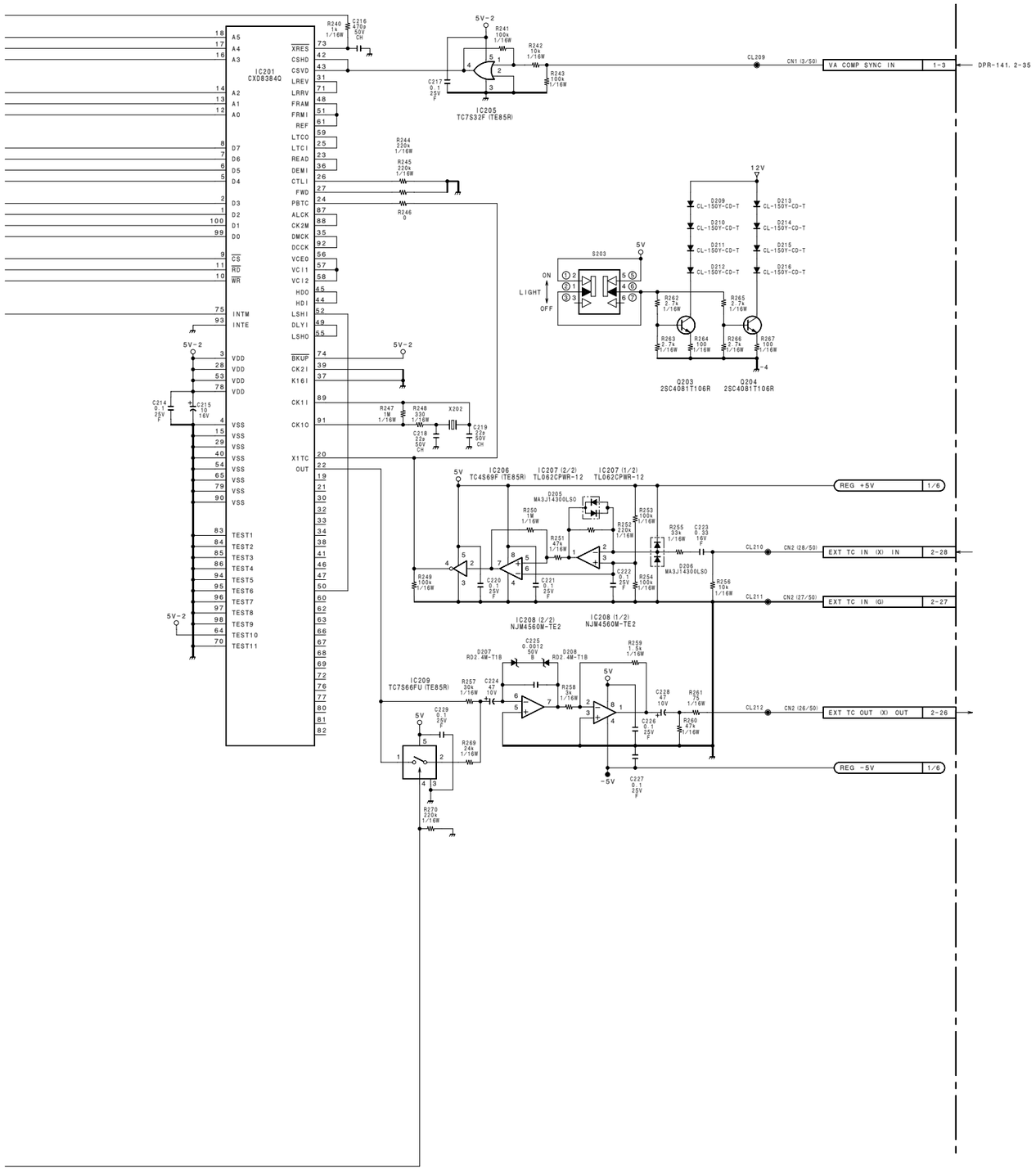

4-53

FP-118A/118 (2/6)

BOARD NO. 1-673-967-11, 12, 13

B-DSR500WS-FP118-SM

FP-118A/118 (3/6)

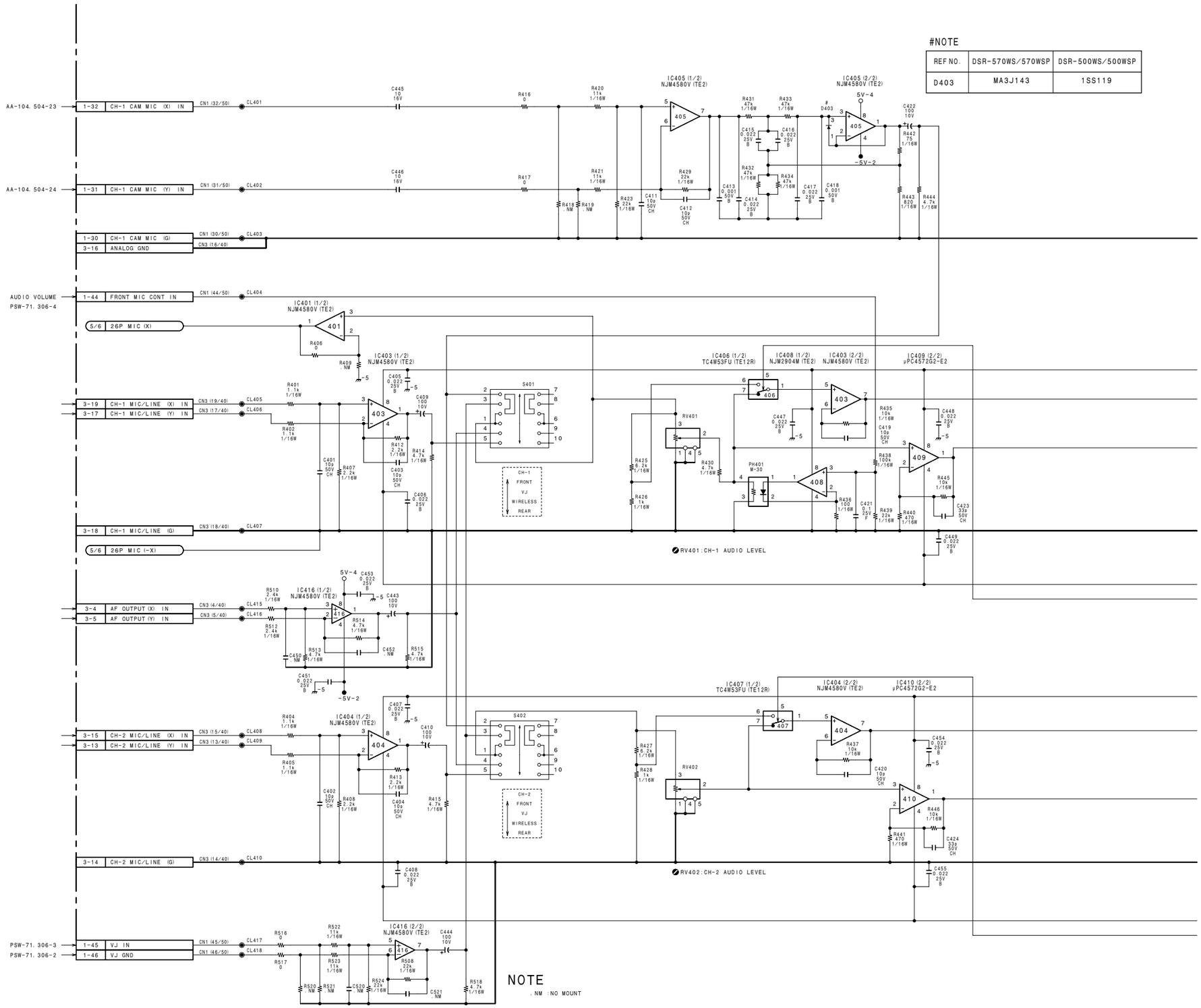

FP-118A/118 (3/6)

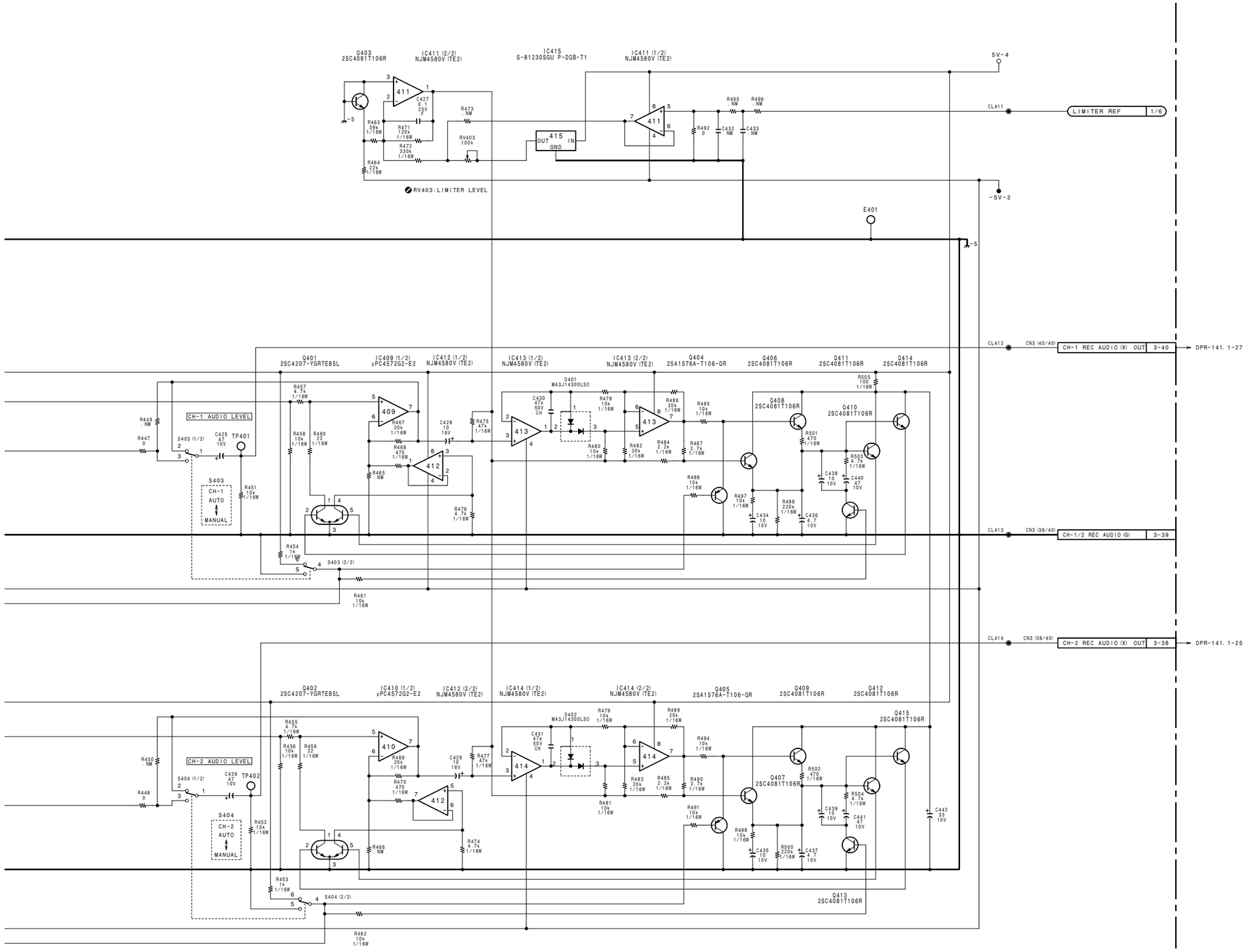

FP-118A/118 (3/6)

BOARD NO. 1-673-967-11, 12, 13

B-DSR500WS-FP118-SM

FP-118A/118 (4/6)

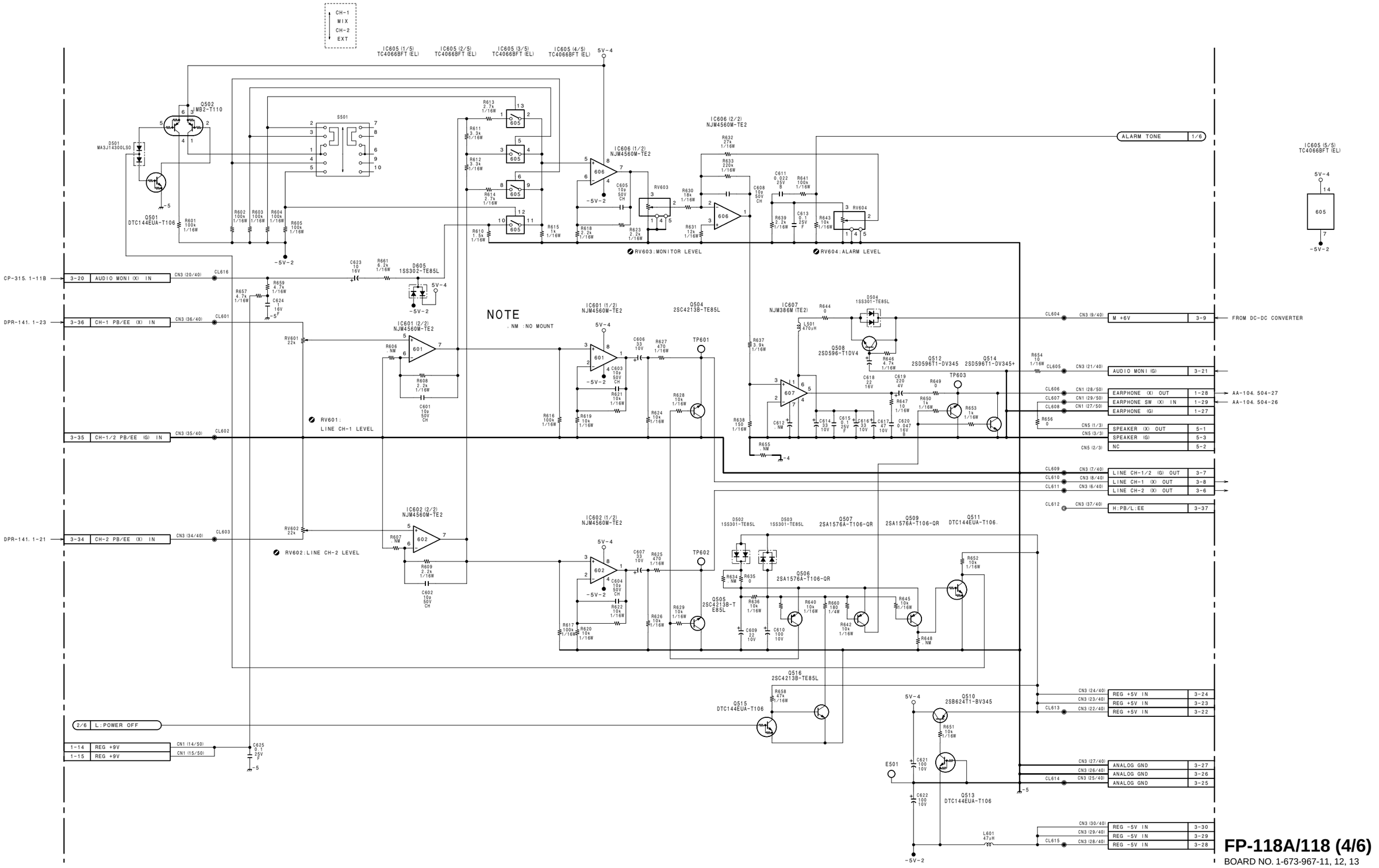

FP-118A/118 (4/6)

BOARD NO. 1-673-967-11, 12, 13

B-DSR500WS-FP118-SM

FP-118A/118 (5/6)

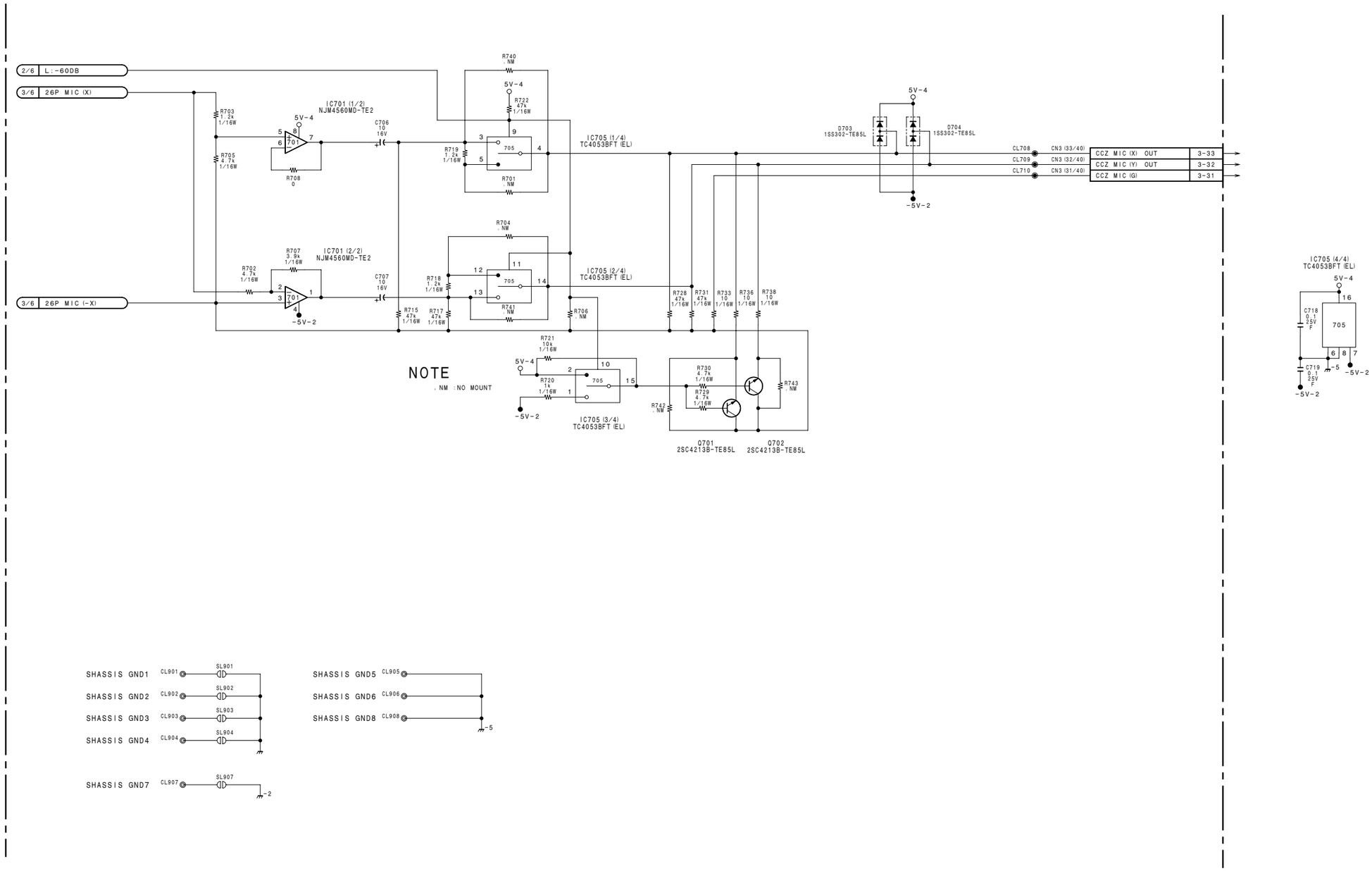

FP-118A/118 (5/6)

BOARD NO. 1-673-967-11, 12, 13

B-DSR500WS-FP118-SM

FP-118A/118 (6/6)

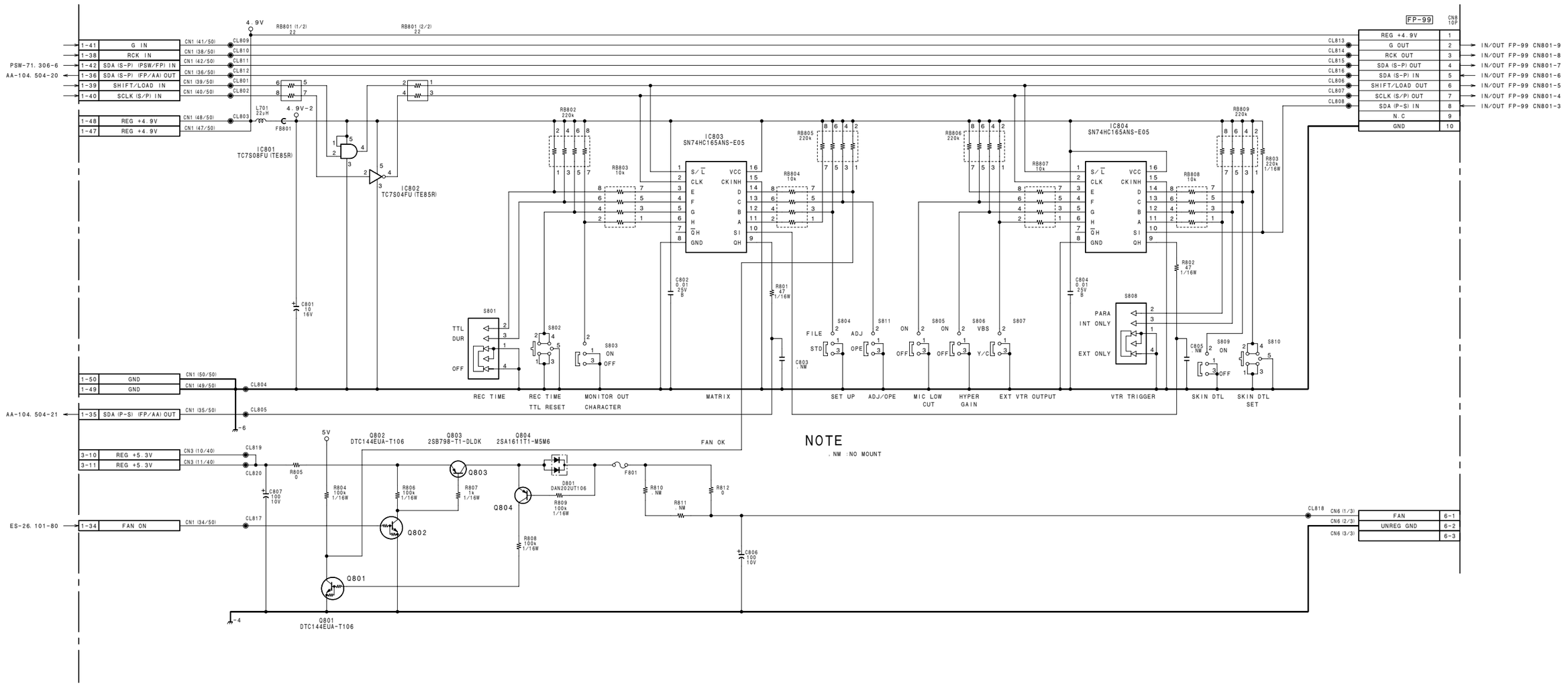

FP-118A/118 (6/6)

BOARD NO. 1-673-967-11, 12, 13

B-DSR500WS-FP118-SM

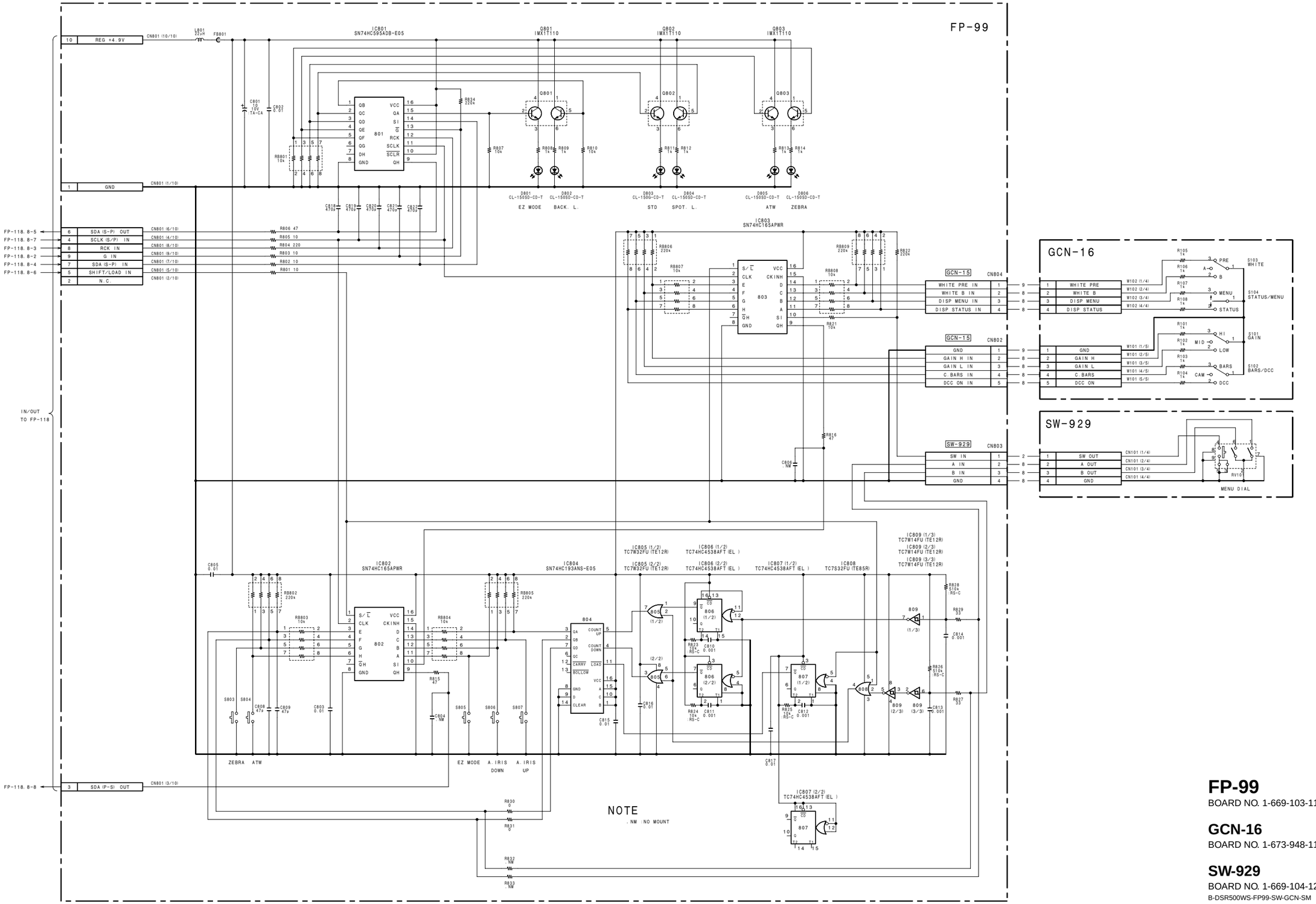

FP-99
BOARD NO. 1-669-103-11

GCN-16
BOARD NO. 1-673-948-11

SW-929
BOARD NO. 1-669-104-12
B-DSR500WS-FP99-SW-GCN-SM

RP-91 (1/2)

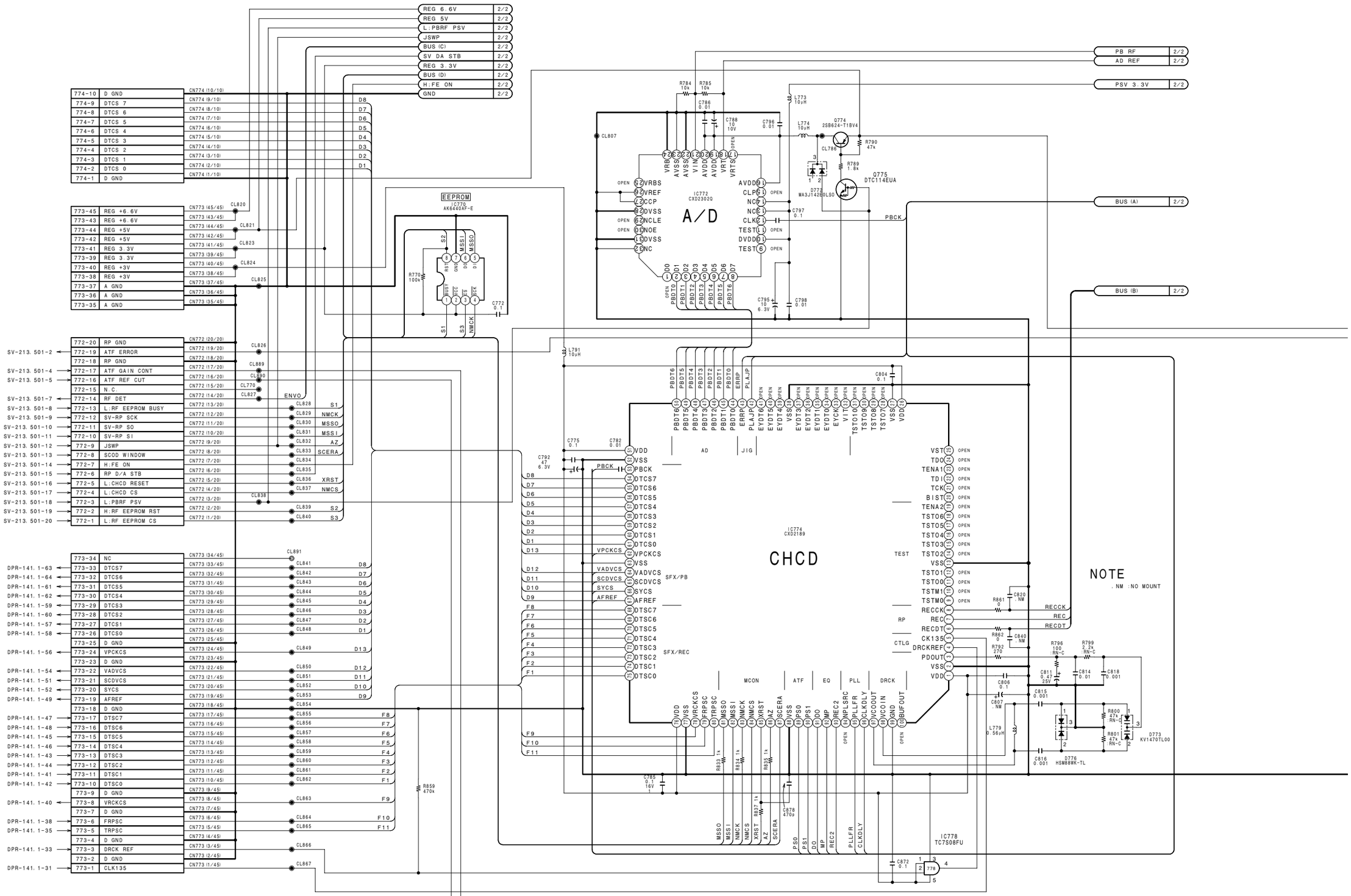
REG 6.6V 2/2
REG 5V 2/2
L:PBRF PSV 2/2
JSWP 2/2
BUS (C) 2/2
SV DA STB 2/2
REG 3.3V 2/2
BUS (D) 2/2
H:FE ON 2/2
GND 2/2
PB RF 2/2
AD REF 2/2
PSV 3.3V 2/2
BUS (A) 2/2
BUS (B) 2/2
774-10 D GND
774-9 DTCS 7
774-8 DTCS 6
774-7 DTCS 5
774-6 DTCS 4
774-5 DTCS 3
774-4 DTCS 2
774-3 DTCS 1
774-2 DTCS 0
774-1 D GND
773-45 REG +6.6V
773-43 REG +6.6V
773-44 REG +5V
773-42 REG +5V
773-41 REG 3.3V
773-39 REG 3.3V
773-40 REG +3V
773-38 REG +3V
773-37 A GND
773-36 A GND
773-35 A GND
772-20 RP GND
772-19 ATF ERROR
772-18 RP GND
772-17 ATF GAIN CONT
772-16 ATF REF CUT
772-15 N.C.
772-14 RF DET
772-13 L:RF EEPROM BUSY
772-12 SV-RP SCK
772-11 SV-RP SO
772-10 SV-RP SI
772-9 JSWP
772-8 SCOD WINDOW
772-7 H:FE ON
772-6 RP D/A STB
772-5 L:CHCD RESET
772-4 L:CHCD CS
772-3 L:PBRF PSV
772-2 H:RF EEPROM RST
772-1 L:RF EEPROM CS
773-34 NC
773-33 DTCS7
773-32 DTCS6
773-31 DTCS5
773-30 DTCS4
773-29 DTCS3
773-28 DTCS2
773-27 DTCS1
773-26 DTCS0
773-25 D GND
773-24 VPCKCS
773-23 D GND
773-22 VADVCS
773-21 SCDVCS
773-20 SYCS
773-19 AFREF
773-18 D GND
773-17 DTSC7
773-16 DTSC6
773-15 DTSC5
773-14 DTSC4
773-13 DTSC3
773-12 DTSC2
773-11 DTSC1
773-10 DTSC0
773-9 D GND
773-8 VRCKCS
773-7 D GND
773-6 FRPSC
773-5 TRPSC
773-4 D GND
773-3 DRCK REF
773-2 D GND
773-1 CLK135
EEPROM IC776 AK6440AF-E
A/D IC772 CXD2302Q
CHCD IC774 CXD2189
IC778 TC7S08FU
Q775 DTC114EUA
D772 MA3J142E0LSO
D773 KV1470TL00
D776 HSM88WK-TL
NOTE
. NM :NO MOUNT
MCON
ATF
EQ
PLL
DRCK
AD
JIG
SFX/PB
SFX/REC
RP
CTLG
TEST
ENVO

4-60

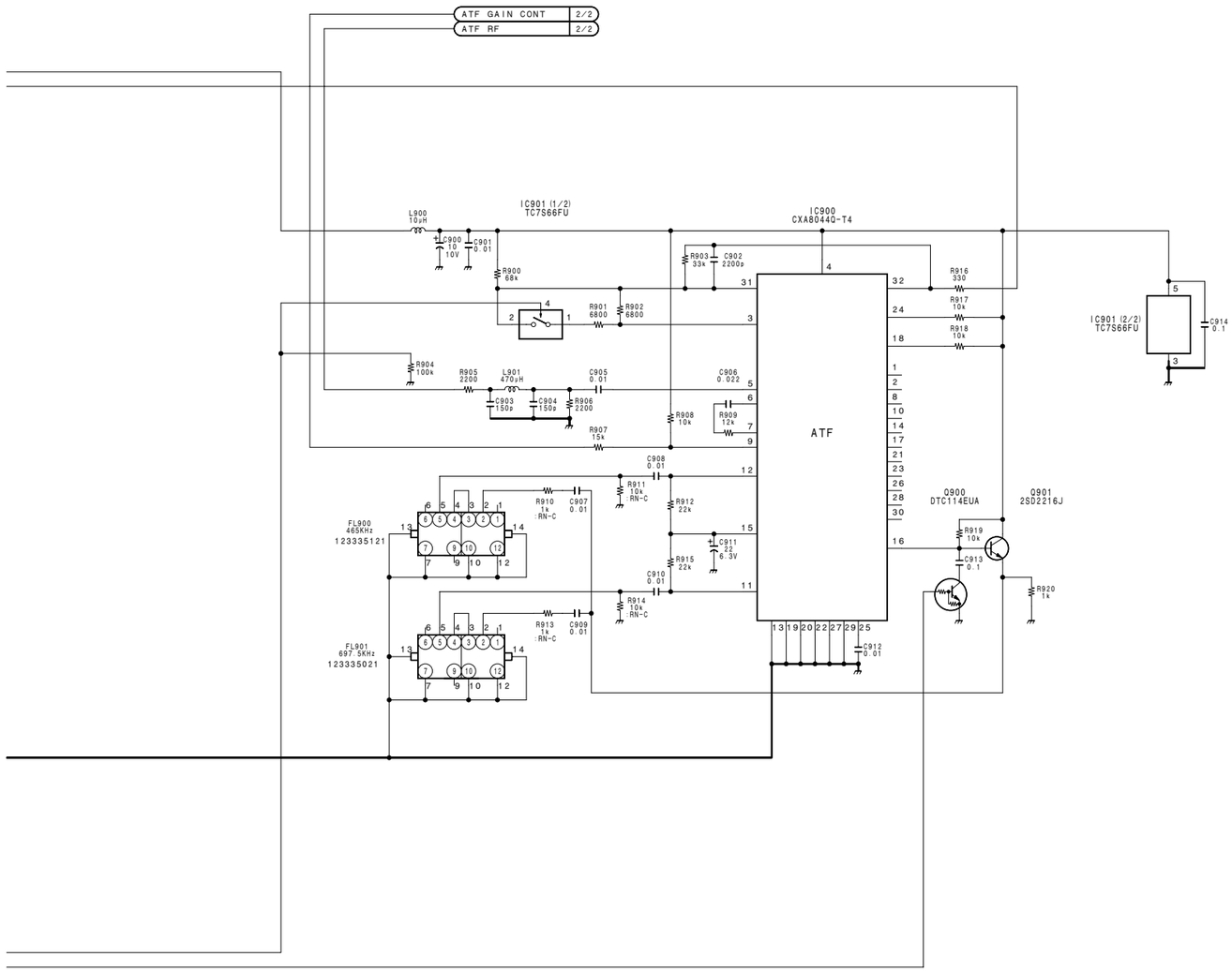

RP-91 (1/2)
BOARD NO. 1-662-878-12
B-DSR500WS-RP91-SM

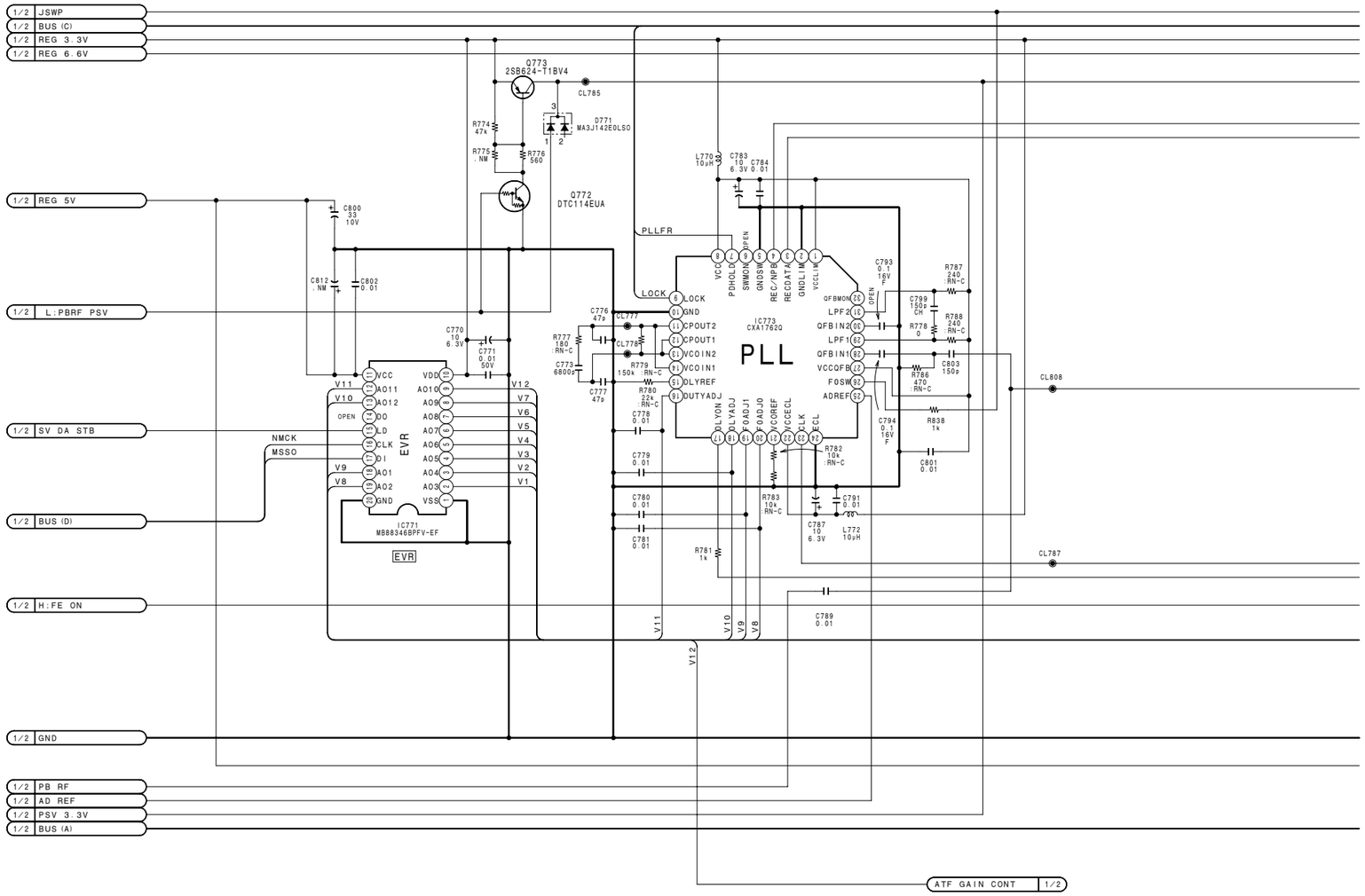
1/2 JSWP
1/2 BUS (C)
1/2 REG 3.3V
1/2 REG 6.6V
1/2 REG 5V
1/2 L:PBRF PSV
1/2 SV DA STB
1/2 BUS (D)
1/2 H:FE ON
1/2 GND
1/2 PB RF
1/2 AD REF
1/2 PSV 3.3V
1/2 BUS (A)
ATF GAIN CONT 1/2
Q773 2SB624-T1BV4
CL785
D771 MA3J142E0LSO
R774 47k
R775 NM
R776 560
Q772 DTC114EUA
C800 33 10V
C812 NM
C802 0.01
C770 10 6.3V
C771 0.01 50V
L770 10µH
C783 10 6.3V
C784 0.01
PLLFR
LOCK
C776 47p
CL777
CL778
R777 180 RN-C
C773 6800p
R779 150k RN-C
C777 47p
R780 22k RN-C
C778 0.01
C779 0.01
C780 0.01
C781 0.01
R781 1k
R783 10k RN-C
C787 10 6.3V
C791 0.01 50
L772 10uH
C789 0.01
C793 0.1 16V F
C794 0.1 16V F
C799 150p CH
R787 240 RN-C
R778 0
R768 240 RN-C
C803 150p
R786 470 RN-C
R838 1k
C801 0.01
R782 10k RN-C
CL808
CL787
IC773 CXA1762Q
PLL
VCC
PDHOLD
SWMON
GNDSW
REC/NPB
RECDATA
GNDLIN
VCCLIN
OPEN
LOCK
GND
CPOUT2
CPOUT1
VCOIN2
VCOIN1
DLYREF
DUTYADJ
OFBMON
LPF2
QFBIN2
LPF1
QFBIN1
VCCQFB
FOSW
ADREF
DLYLON
DLYADJ
VCOADJ1
VCOADJ0
VCOREF
VCOECL
CLK
TCL
IC771 MB88346BPFV-EF
EVR
VCC
AO11
AO12
OPEN
DO
XLD
CLK
DI
AO1
AO2
GND
VDD
AO10
AO9
AO8
AO7
AO6
AO5
AO4
AO3
VSS
V11
V10
V9
V8
V12
V7
V6
V5
V4
V3
V2
V1
NMCK
MSSO

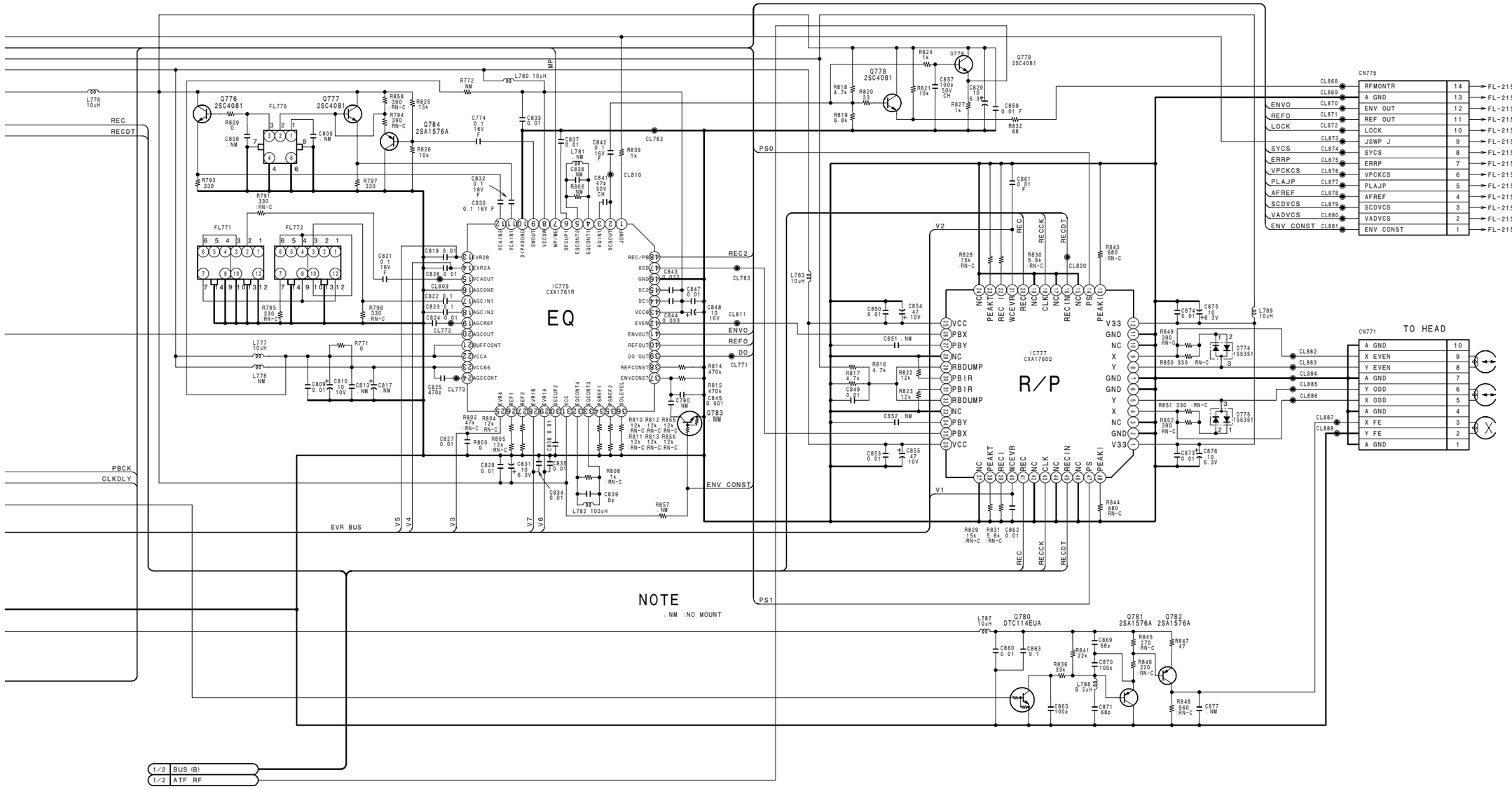

RP-91 (2/2)
BOARD NO. 1-662-878-12
B-DSR500WS-RP91-SM

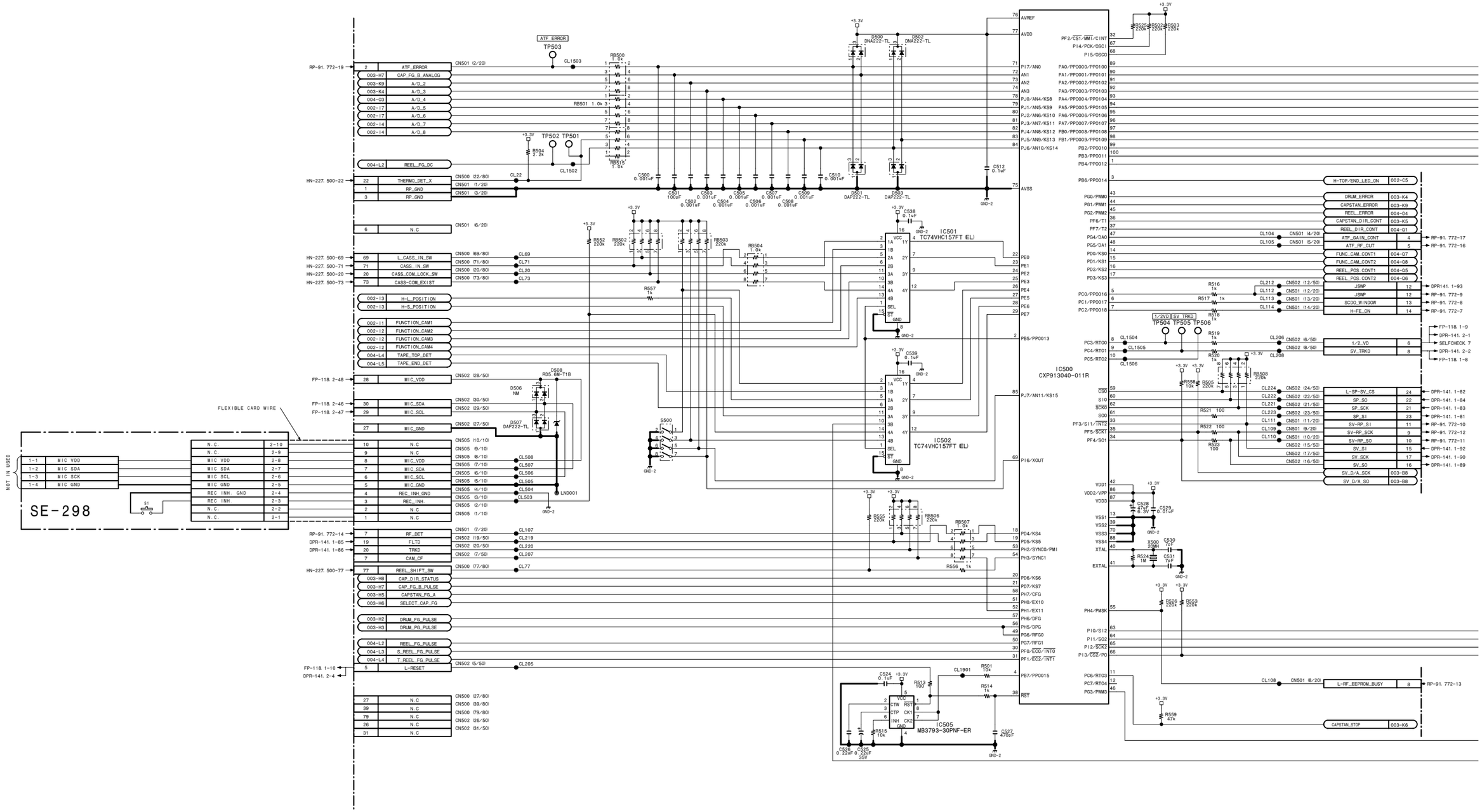
IC500 CXP913040-011R
IC501 TC74VHC157FT (EL)
IC502 TC74VHC157FT (EL)
IC505 MB3793-30PNF-ER
SE-298
FLEXIBLE CARD WIRE
NOT IN USED
ATF_ERROR
TP503
TP502 TP501
TP504 TP505 TP506
S500
S1
D500 DNA222-TL
D502 DNA222-TL
D501 DAP222-TL
D503 DAP222-TL
D507 DAP222-TL
D508 RD5.6M-T1B
D506 NM
X500 20MH
LND001
ATF_ERROR
CAP_FG_B_ANALOG
A/D_2
A/D_3
A/D_4
A/D_5
A/D_6
A/D_7
A/D_8
REEL_FG_DC
THERMO_DET_X
RP_GND
N.C
L_CASS_IN_SW
CASS_IN_SW
CASS_COM_LOCK_SW
CASS-COM_EXIST
H-L_POSITION
H-S_POSITION
FUNCTION_CAM1
FUNCTION_CAM2
FUNCTION_CAM3
FUNCTION_CAM4
TAPE_TOP_DET
TAPE_END_DET
MIC_VDD
MIC_SDA
MIC_SCL
MIC_GND
REC_INH_GND
REC_INH.
RF_DET
FLTD
TRKD
CAM_CF
REEL_SHIFT_SW
CAP_DIR_STATUS
CAP_FG_B_PULSE
CAPSTAN_FG_A
SELECT_CAP_FG
DRUM_FG_PULSE
DRUM_PG_PULSE
REEL_FG_PULSE
S_REEL_FG_PULSE
T_REEL_FG_PULSE
L-RESET
H-TOP/END_LED_ON
DRUM_ERROR
CAPSTAN_ERROR
REEL_ERROR
CAPSTAN_DIR_CONT
REEL_DIR_CONT
ATF_GAIN_CONT
ATF_RF_CUT
FUNC_CAM_CONT1
FUNC_CAM_CONT2
REEL_POS_CONT1
REEL_POS_CONT2
JSWP
SCDO_WINDOW
H-FE_ON
1/2_VD
SV_TRKD
L-SP-SV_CS
SP_SO
SP_SCK
SP_SI
SV-RP_SCK
SV-RP_SO
SV_SCK
SV_SO
SV_D/A_SCK
SV_D/A_SO
L-RF_EEPROM_BUSY
CAPSTAN_STOP
MIC VDD
MIC SDA
MIC SCK
MIC GND
REC INH. GND
REC INH.
N.C.
AVREF
AVDD
AVSS
PF2/CST/MMT/CINT
PI4/PCK/OSCI
PI5/OSCO
PA0/PPO00D/PPO100
PA1/PPO001/PPO101
PA2/PPO002/PPO102
PA3/PPO003/PPO103
PA4/PPO004/PPO104
PA5/PPO005/PPO105
PA6/PPO006/PPO106
PA7/PPO007/PPO107
PB0/PPO008/PPO108
PB1/PPO009/PPO109
PB2/PPO010
PB3/PPO011
PB4/PPO012
PB6/PPO014
PG0/PWM0
PG1/PWM1
PG2/PWM2
PF6/T1
PF7/T2
PG4/DA0
PG5/DA1
PD0/KS0
PD1/KS1
PD2/KS2
PD3/KS3
PC0/PPO016
PC1/PPO017
PC2/PPO018
PC3/RT00
PC4/RT01
PC5/RT02
PF3/SI1/INT2
PF5/SCK1
PF4/SO1
PA7/AN8/KS12
PJ5/AN9/KS13
PJ6/AN10/KS14
PJ7/AN11/KS15
PI6/XOUT
PD4/KS4
PD5/KS5
PH2/SYNCO/PMI
PH3/SYNC1
PD6/KS6
PD7/KS7
PH7/CFG
PH0/EX10
PH1/EX11
PH6/DFG
PH5/DPG
PG6/RFG0
PG7/RFG1
PF0/ECG-/INT0
PF1/ECZ-/INT1
PB7/PPO015
RST
PE0
PE1
PE2
PE3
PE4
PE5
PE6
PE7
PB5/PPO013
PH4/PMSK
PI0/SI2
PI1/SO2
PI2/SCK2
PI3/CS2/PO
PC6/RT03
PC7/RT04
PG3/PWM3
CN500 (2/20)
CN501 (2/20)
CN502 (28/50)
CN505 (10/10)
CN501 (7/20)
CN500 (69/80)
CN500 (71/80)
CN500 (20/80)
CN500 (73/80)
CN502 (30/50)
CN502 (29/50)
CN502 (27/50)
CN505 (9/10)
CN505 (8/10)
CN505 (7/10)
CN505 (6/10)
CN505 (5/10)
CN505 (4/10)
CN505 (3/10)
CN505 (2/10)
CN505 (1/10)
CN501 (1/20)
CN501 (3/20)
CN501 (6/20)
CN502 (19/50)
CN502 (20/50)
CN502 (7/50)
CN500 (77/80)
CN502 (5/50)
CN500 (27/80)
CN500 (39/80)
CN500 (79/80)
CN502 (26/50)
CN502 (31/50)
CN501 (4/20)
CN501 (5/20)
CN502 (12/50)
CN501 (12/20)
CN501 (13/20)
CN501 (14/20)
CN502 (6/50)
CN502 (8/50)
CN502 (24/50)
CN502 (22/50)
CN502 (21/50)
CN502 (23/50)
CN501 (11/20)
CN501 (9/20)
CN502 (15/50)
CN502 (17/50)
CN502 (16/50)
CN501 (10/20)
CN501 (8/20)
RP-91. 772-19
HN-227. 500-22
HN-227. 500-69
HN-227. 500-71
HN-227. 500-20
HN-227. 500-73
FP-118. 2-48
FP-118. 2-46
FP-118. 2-47
RP-91. 772-14
DPR-141. 1-85
DPR-141. 1-86
HN-227. 500-77
FP-118. 1-10
DPR-141. 2-4
RP-91. 772-17
RP-91. 772-16
DPR141. 1-93
RP-91. 772-9
RP-91. 772-8
RP-91. 772-7
FP-118. 1-9
DPR-141. 2-1
SELFCHECK. 7
DPR-141. 2-2
FP-118. 1-8
DPR-141. 1-82
DPR-141. 1-84
DPR-141. 1-83
DPR-141. 1-81
RP-91. 772-10
RP-91. 772-12
RP-91. 772-11
DPR-141. 1-92
DPR-141. 1-90
DPR-141. 1-89
RP-91. 772-13
002-C5
003-K4
003-K9
004-C4
003-K5
004-01
004-07
004-08
004-05
004-06
003-B8
003-K6
+3.3V
GND-2

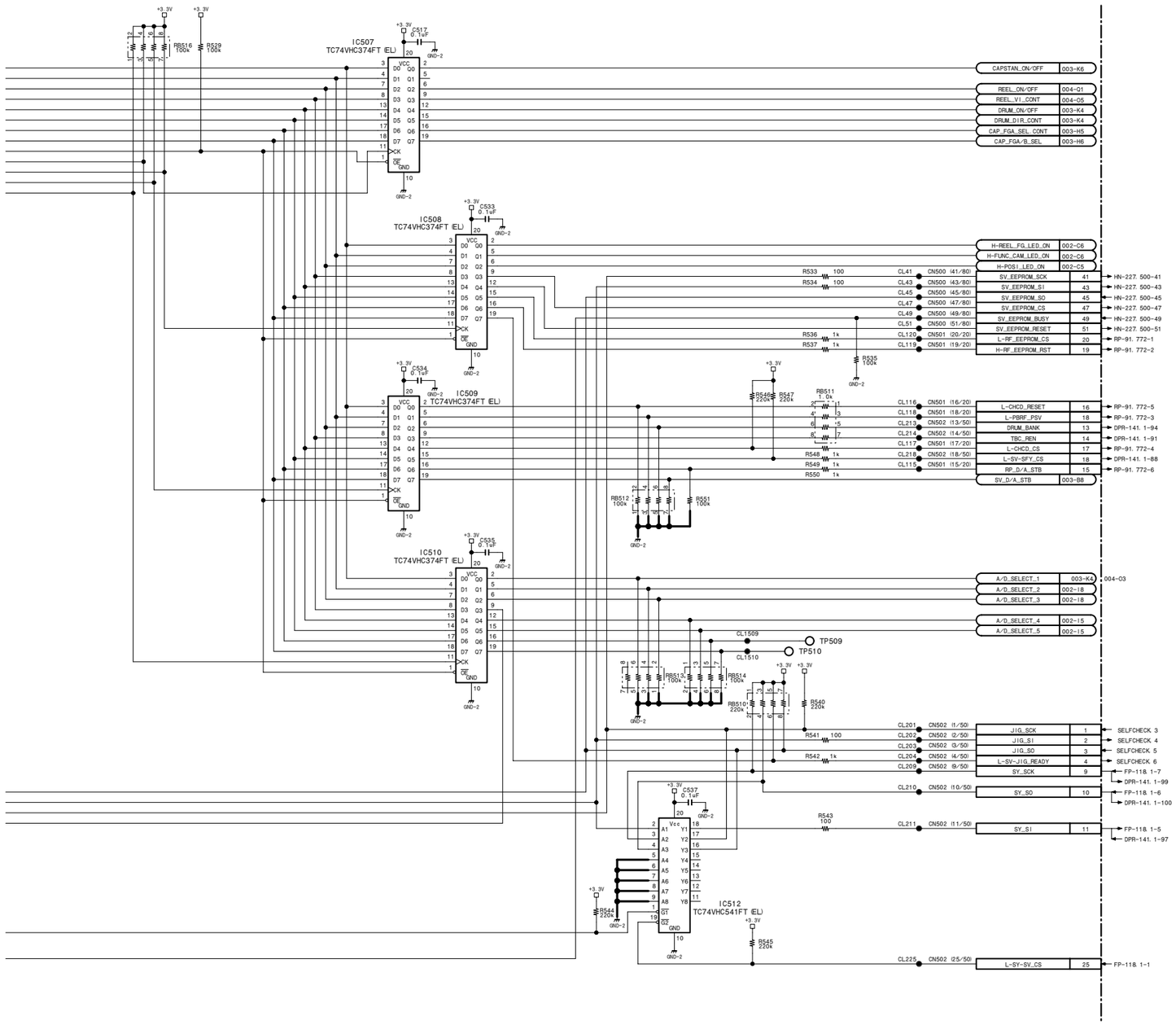

SV-213 (1/4)
BOARD NO. 1-673-983-11, 12

SE-298
DSR-500WSL_SV-213_001

SV-213 (2/4)

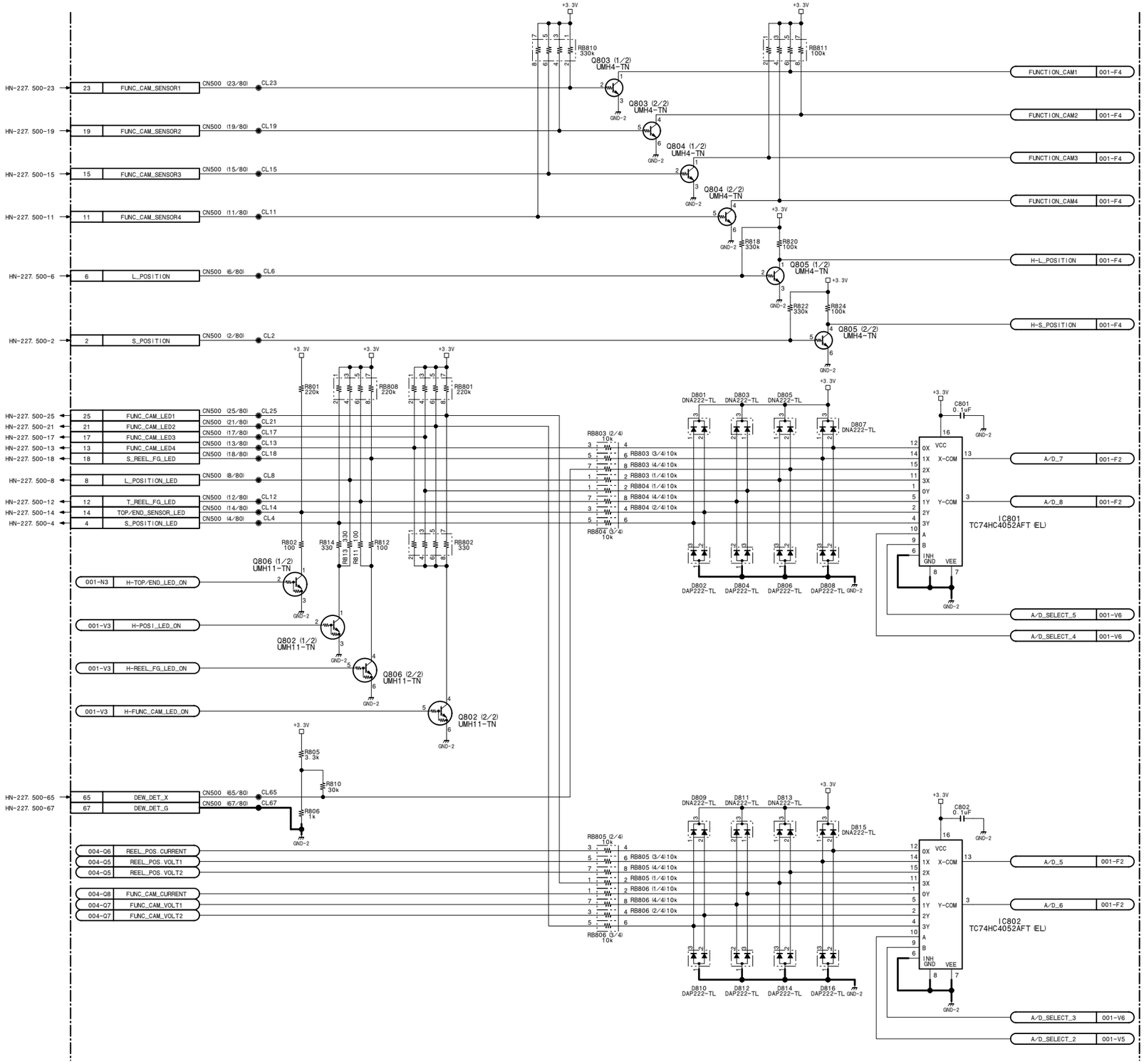

SV-213 (2/4)
BOARD NO. 1-673-983-11, 12
DSR-500WSL_SV-213_001

SV-213 (3/4)

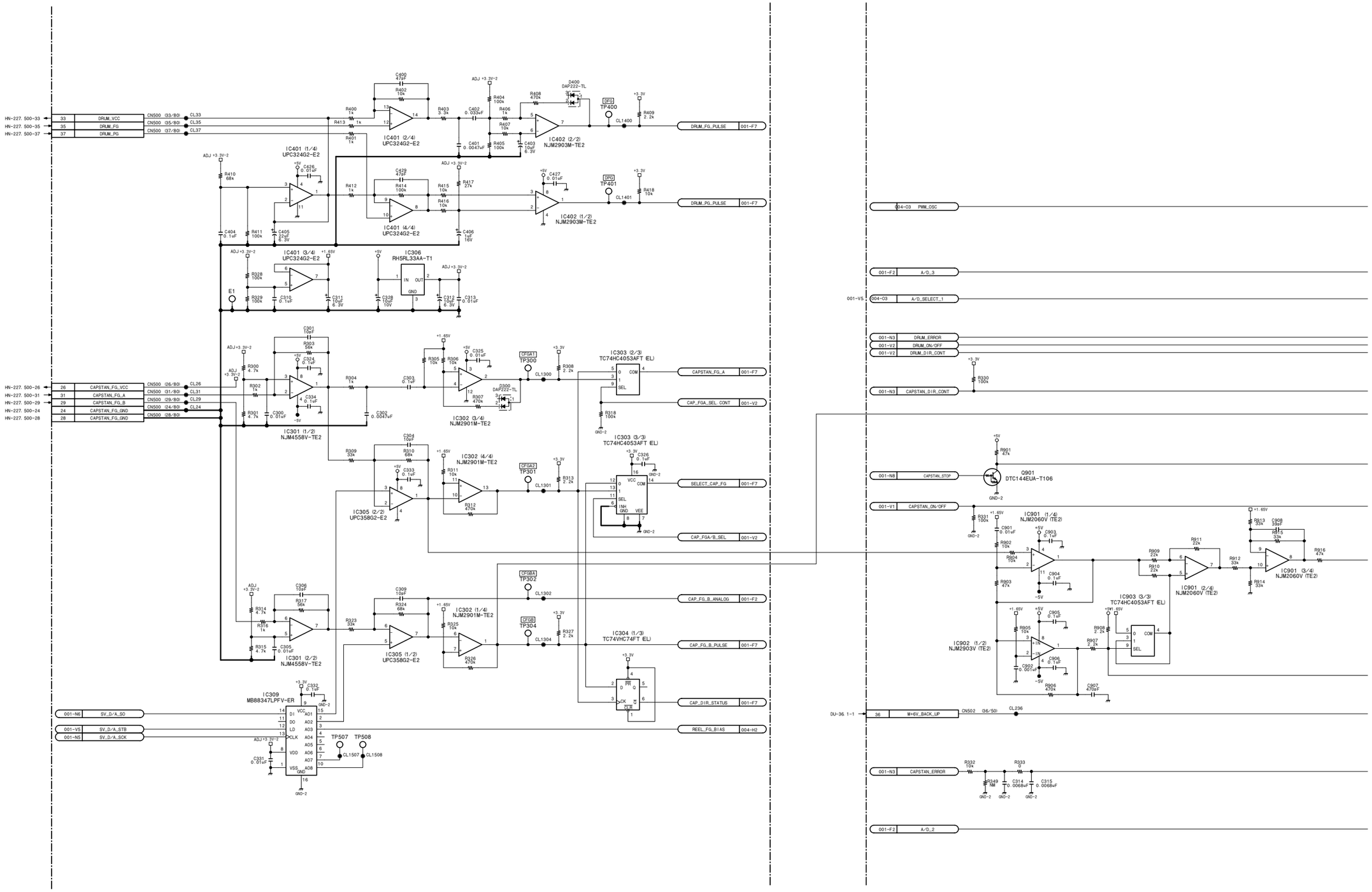
HN-227. 500-33
HN-227. 500-35
HN-227. 500-37
33 DRUM_VCC
35 DRUM_FG
37 DRUM_PG
CN500 (33/80)
CN500 (35/80)
CN500 (37/80)
CL33
CL35
CL37
IC401 (1/4) UPC324G2-E2
IC401 (2/4) UPC324G2-E2
IC401 (3/4) UPC324G2-E2
IC401 (4/4) UPC324G2-E2
IC402 (2/2) NJM2903M-TE2
IC402 (1/2) NJM2903M-TE2
IC306 RH5RL33AA-T1
DRUM_FG_PULSE 001-F7
DRUM_PG_PULSE 001-F7
HN-227. 500-26
HN-227. 500-31
HN-227. 500-29
HN-227. 500-24
HN-227. 500-28
26 CAPSTAN_FG_VCC
31 CAPSTAN_FG_A
29 CAPSTAN_FG_B
24 CAPSTAN_FG_GND
28 CAPSTAN_FG_GND
CN500 (26/80)
CN500 (31/80)
CN500 (29/80)
CN500 (24/80)
CN500 (28/80)
CL26
CL31
CL29
CL24
IC301 (1/2) NJM4558V-TE2
IC301 (2/2) NJM4558V-TE2
IC302 (3/4) NJM2901M-TE2
IC302 (4/4) NJM2901M-TE2
IC302 (1/4) NJM2901M-TE2
IC303 (2/3) TC74HC4053AFT (EL)
IC303 (3/3) TC74HC4053AFT (EL)
IC304 (1/3) TC74VHC74FT (EL)
IC305 (2/2) UPC358G2-E2
IC305 (1/2) UPC358G2-E2
CFGA1 TP300
CFGA2 TP301
CFGA3 TP302
CFGB TP304
DFG TP400
DFG TP401
CL1300
CL1301
CL1302
CL1304
CL1400
CL1401
CAPSTAN_FG_A 001-F7
CAP_FGA_SEL CONT 001-V2
SELECT_CAP_FG 001-F7
CAP_FGA/B_SEL 001-V2
CAP_FG_B_ANALOG 001-F2
CAP_FG_B_PULSE 001-F7
CAP_DIR_STATUS 001-F7
REEL_FG_BIAS 004-H2
IC309 MB88347LPFV-ER
001-N6 SV_D/A_SO
001-V5 SV_D/A_STB
001-N5 SV_D/A_SCK
TP507 TP508
CL1507 CL1508
004-03 PWM_OSC
001-F2 A/D_3
001-V5 004-03 A/D_SELECT_1
001-N3 DRUM_ERROR
001-V2 DRUM_ON/OFF
001-V2 DRUM_DIR_CONT
001-N3 CAPSTAN_DIR_CONT
001-N8 CAPSTAN_STOP
001-V1 CAPSTAN_ON/OFF
Q901 DTC144EUA-T106
IC901 (1/4) NJM2060V (TE2)
IC901 (2/4) NJM2060V (TE2)
IC901 (3/4) NJM2060V (TE2)
IC902 (1/2) NJM2903V (TE2)
IC903 (3/3) TC74HC4053AFT (EL)
DU-36 1-1
36 M+6V_BACK_UP
CN502 (36/50)
CL236
001-N3 CAPSTAN_ERROR
001-F2 A/D_2

4-68

SV-213 (3/4)

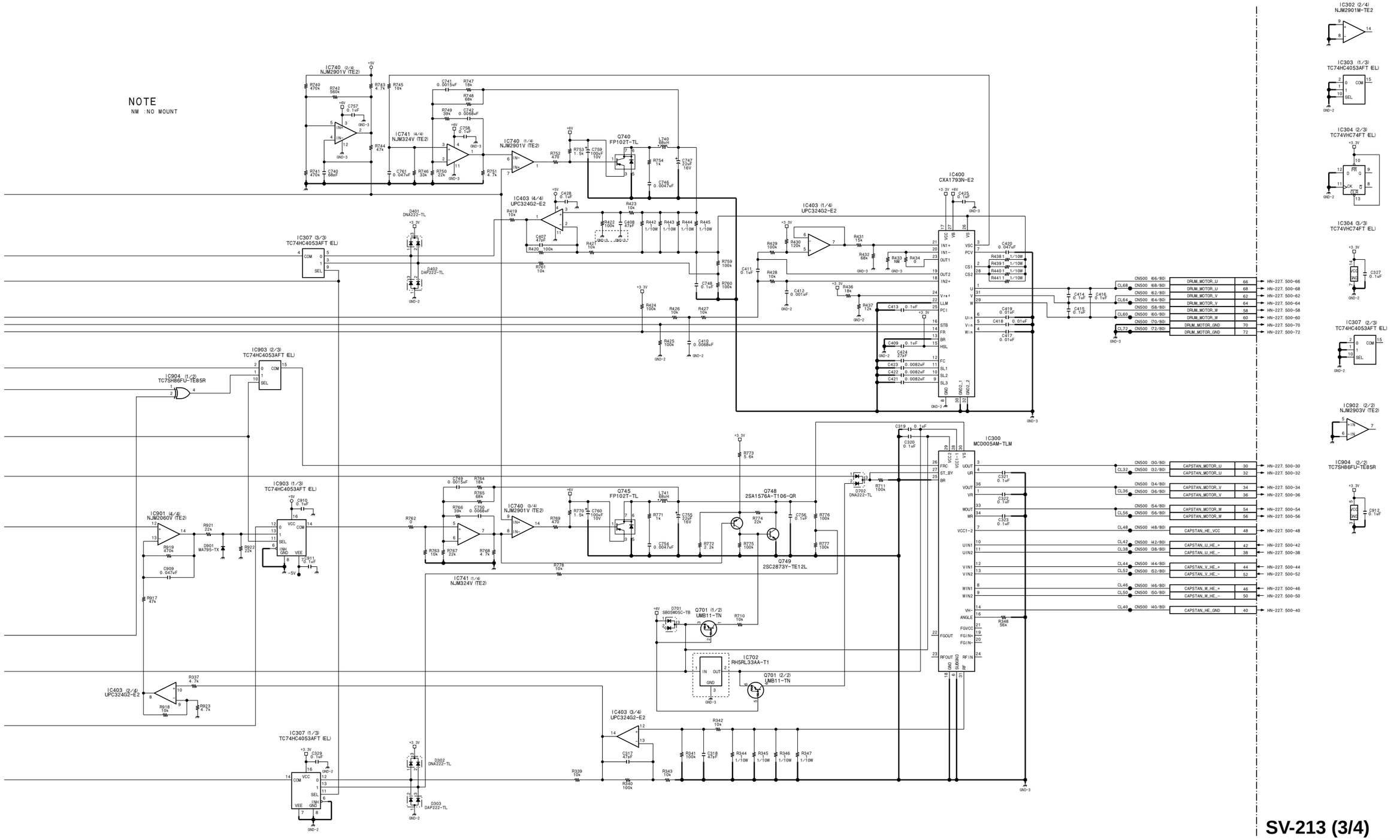

SV-213 (3/4)

BOARD NO. 1-673-983-11, 12

DSR-500WSL_SV-213_001

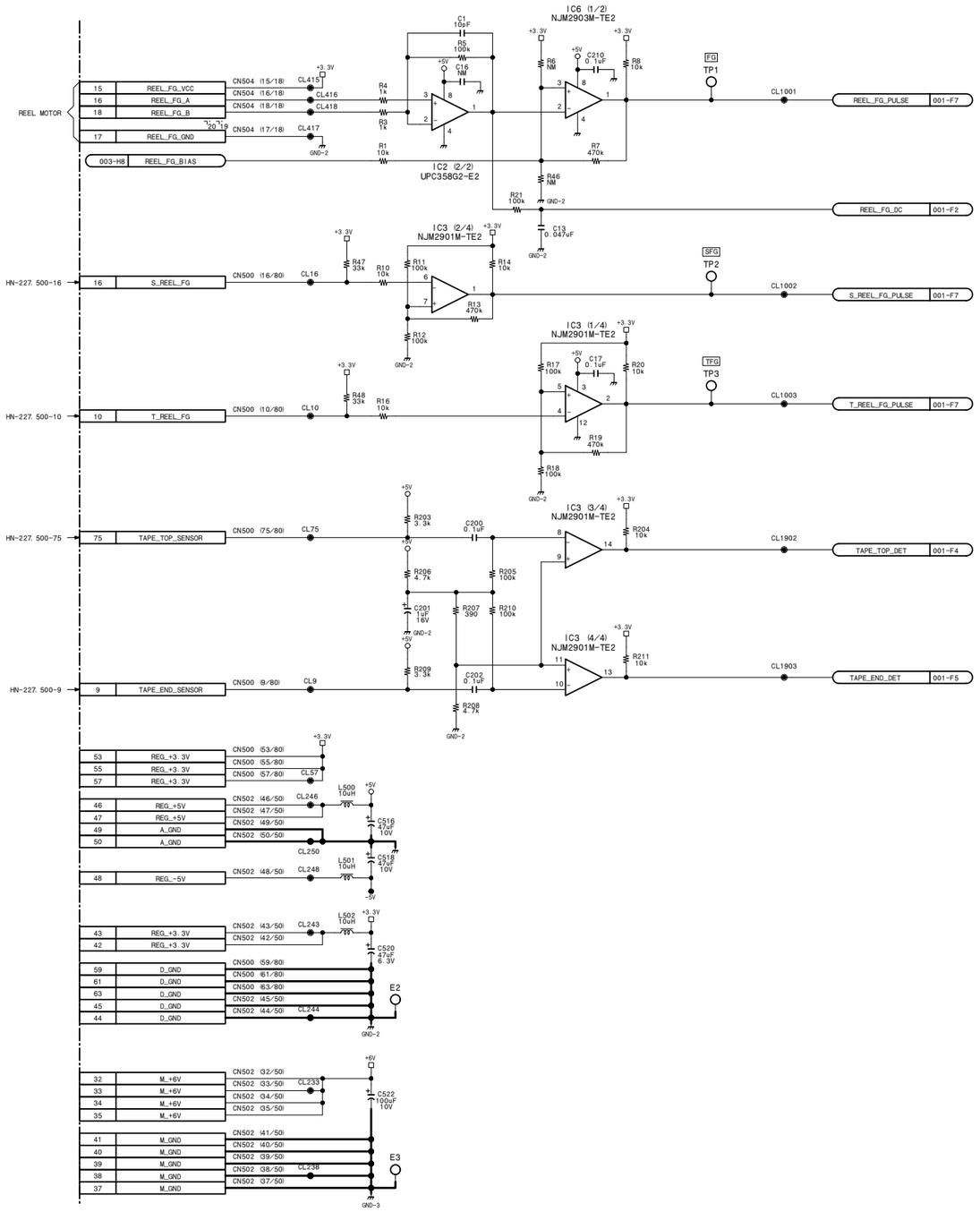
IC6 (1/2)
NJM2903M-TE2
IC2 (2/2)
UPC358G2-E2
IC3 (2/4)
NJM2901M-TE2
IC3 (1/4)
NJM2901M-TE2
IC3 (3/4)
NJM2901M-TE2
IC3 (4/4)
NJM2901M-TE2
REEL MOTOR
HN-227.500-16
HN-227.500-10
HN-227.500-75
HN-227.500-9
15 REEL_FG_VCC
16 REEL_FG_A
18 REEL_FG_B
17 REEL_FG_GND
003-H8 REEL_FG_BIAS
16 S_REEL_FG
10 T_REEL_FG
75 TAPE_TOP_SENSOR
9 TAPE_END_SENSOR
CL1001 REEL_FG_PULSE 001-F7
REEL_FG_DC 001-F2
CL1002 S_REEL_FG_PULSE 001-F7
CL1003 T_REEL_FG_PULSE 001-F7
CL1902 TAPE_TOP_DET 001-F4
CL1903 TAPE_END_DET 001-F5
FG TP1
SFG TP2
TFG TP3
53 REG_+3.3V
55 REG_+3.3V
57 REG_+3.3V
46 REG_+5V
47 REG_+5V
49 A_GND
50 A_GND
48 REG_-5V
43 REG_+3.3V
42 REG_+3.3V
59 D_GND
61 D_GND
63 D_GND
45 D_GND
44 D_GND
32 M_+6V
33 M_+6V
34 M_+6V
35 M_+6V
41 M_GND
40 M_GND
39 M_GND
38 M_GND
37 M_GND
E2
E3
GND-2
GND-3

SV-213 (4/4)

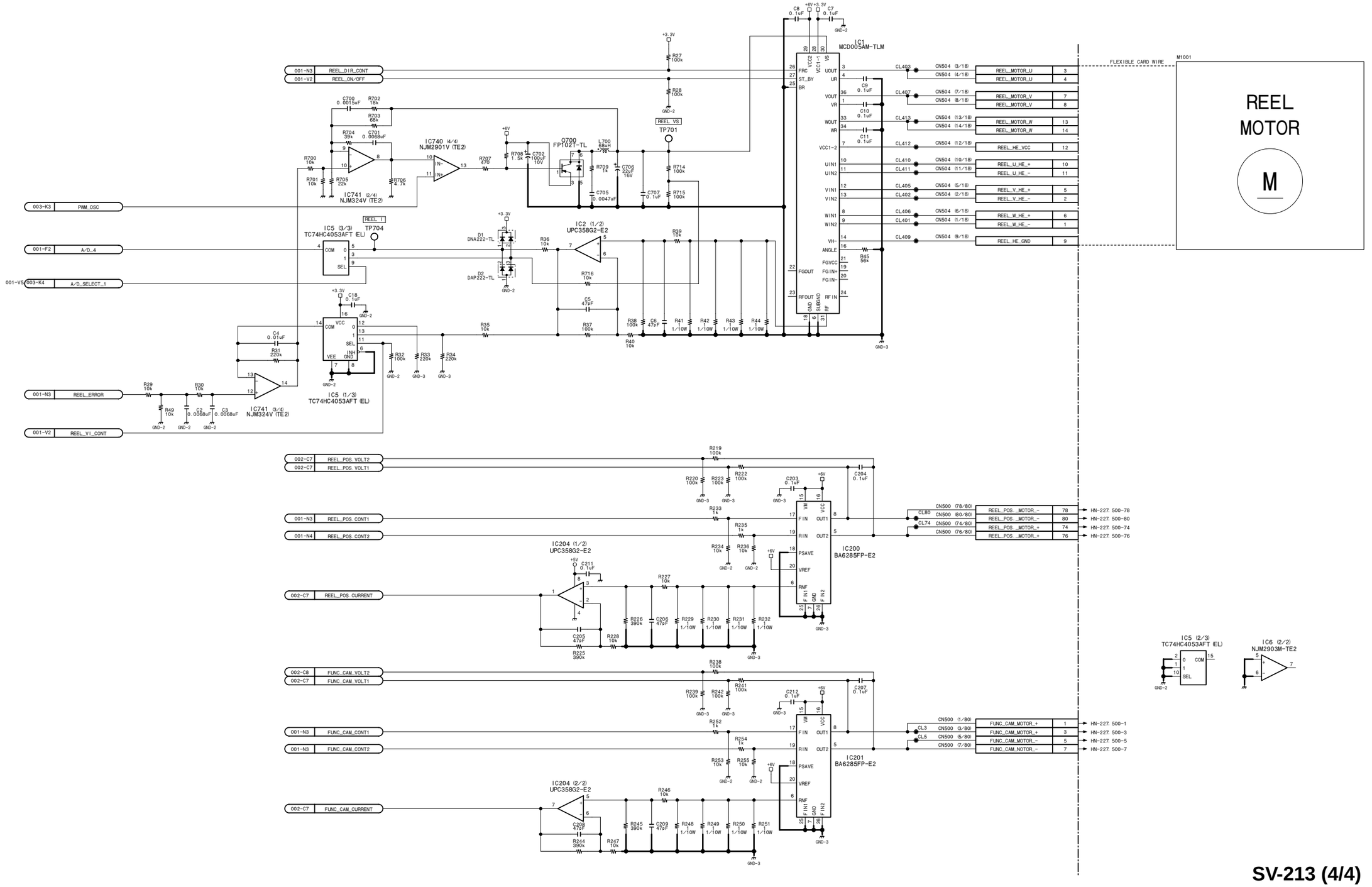

SV-213 (4/4)

BOARD NO. 1-673-983-11, 12

DSR-500WSL_SV-213_001

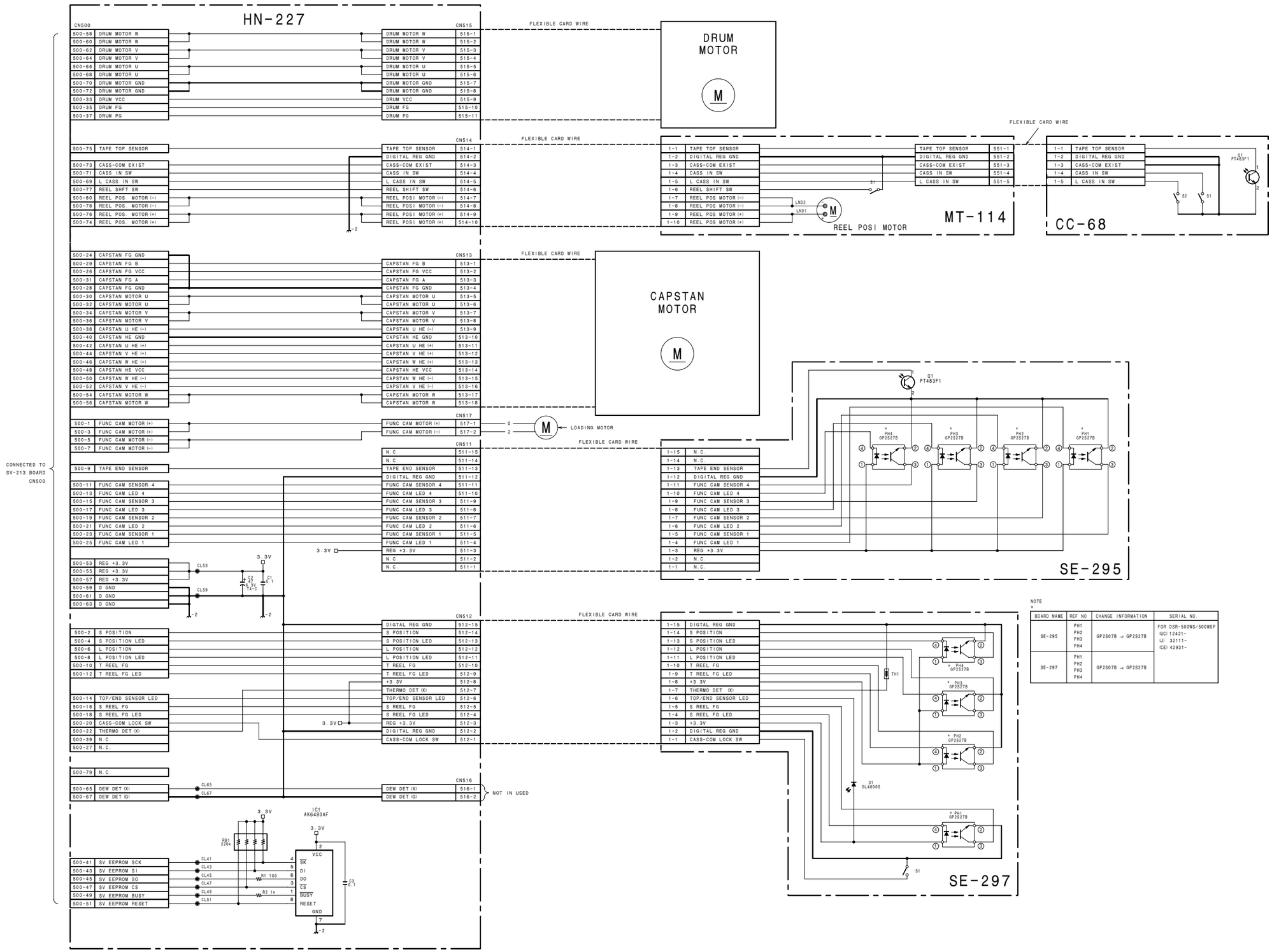

HN-227
BOARD NO. 1-662-879-12

CC-68
BOARD NO. 1-662-883-12

MT-114
BOARD NO. 1-662-884-12

SE-295
BOARD NO. 1-662-881-13, 14

SE-297
BOARD NO. 1-662-882-13
B-DSR500WS-HN-SE-SM

AA-104 CN-1866, CN-1867, LE-221, SW-18

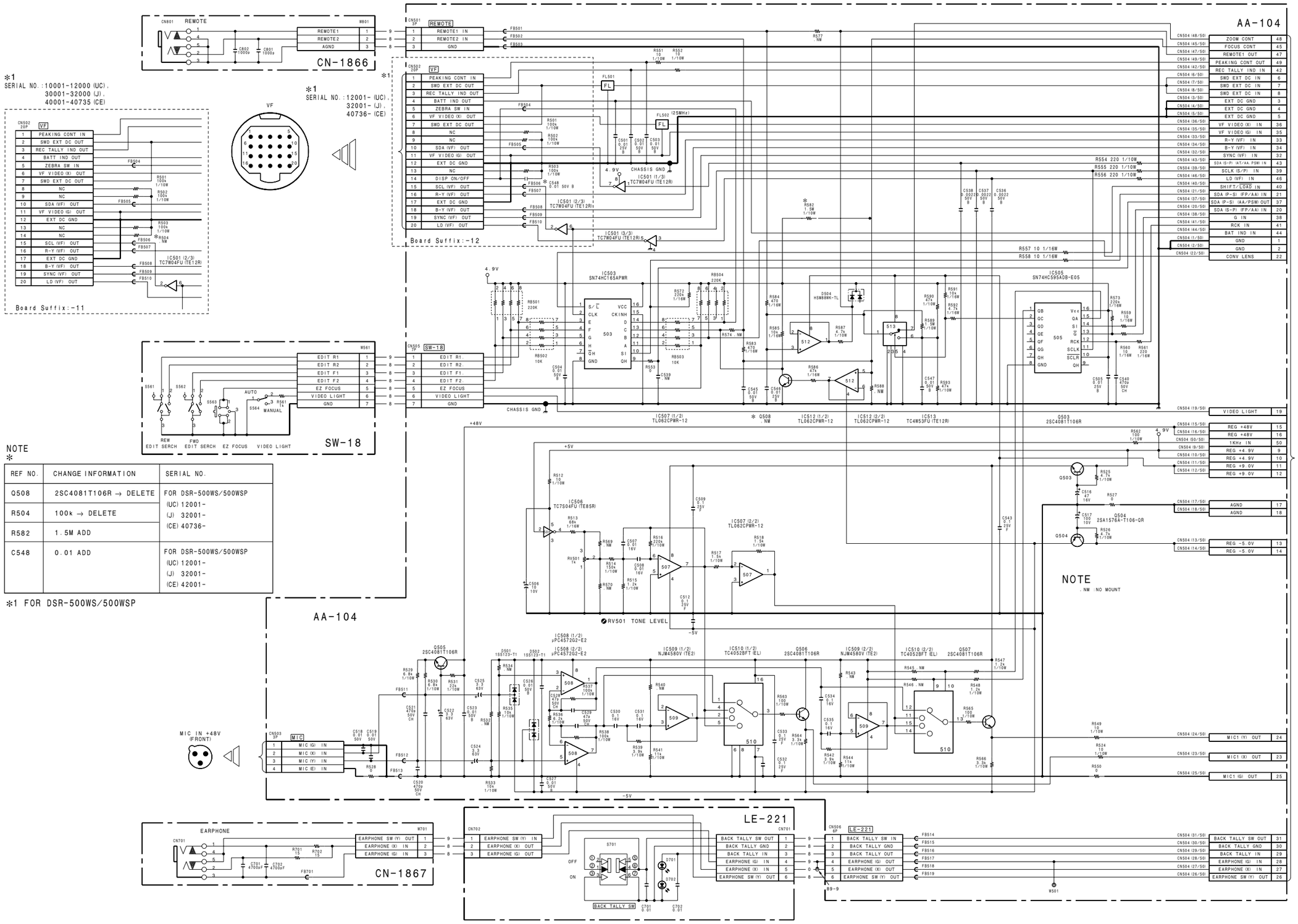

NOTE
*

REF NO.	CHANGE INFORMATION	SERIAL NO.
Q508	2SC4081T106R → DELETE	FOR DSR-500WS/500WSP (UC) 12001- (J) 32001- (CE) 40736-
R504	100k → DELETE	
R582	1.5M ADD	
C548	0.01 ADD	FOR DSR-500WS/500WSP (UC) 12001- (J) 32001- (CE) 42001-

*1 FOR DSR-500WS/500WSP

AA-104
BOARD NO. 1-673-943-11, 12

CN-1866
BOARD NO. 1-673-947-12

CN-1867
BOARD NO. 1-673-950-11

LE-221
BOARD NO. 1-673-949-11

SW-18
BOARD NO. 1-673-944-11
B-DSR500WS-AA-CN-SW-SM

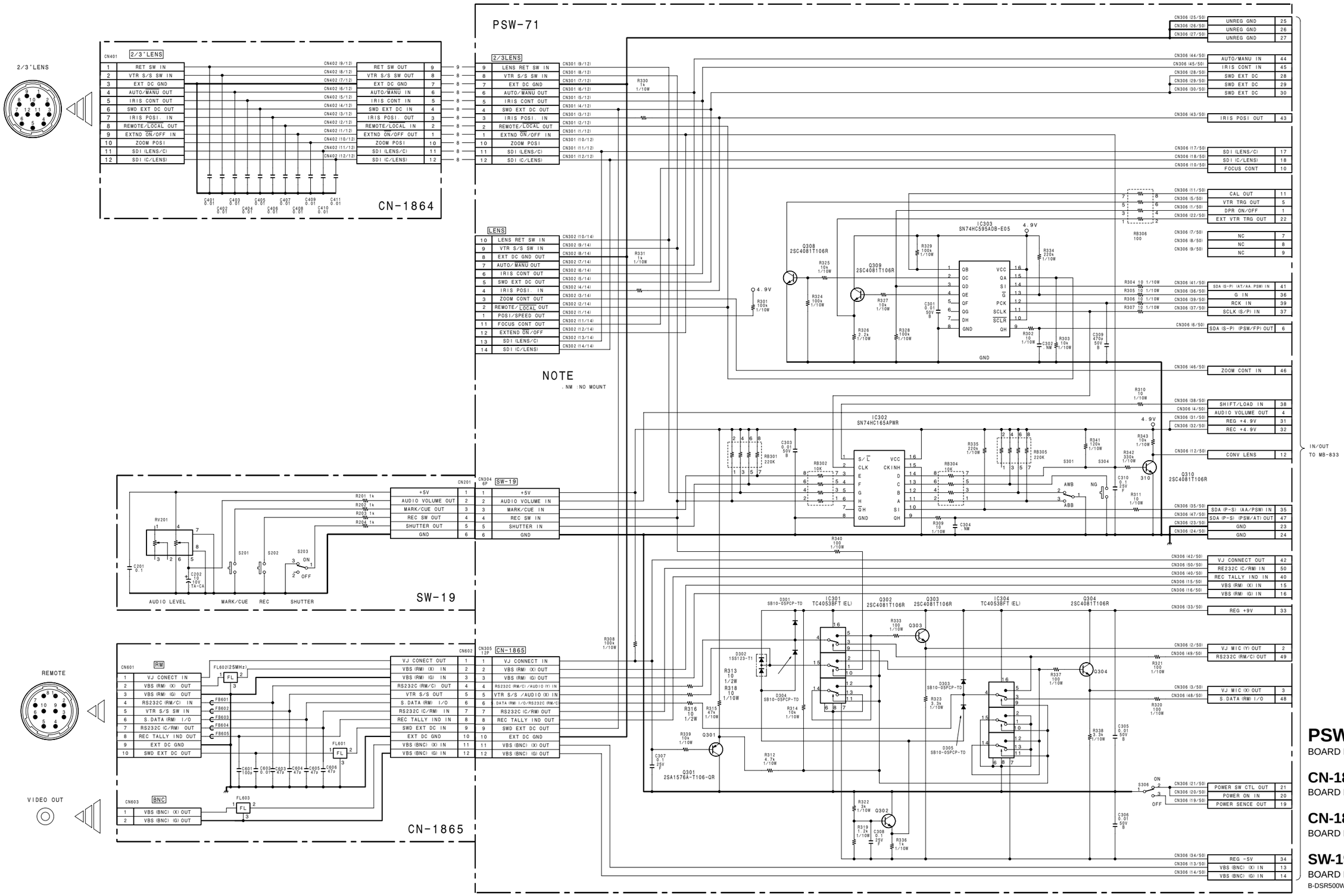

PSW-71
BOARD NO. 1-673-951-11

CN-1864
BOARD NO. 1-673-945-11

CN-1865
BOARD NO. 1-673-946-11

SW-19
BOARD NO. 1-673-953-11
B-DSR500WS-PSW-CN-SW-SM

CP-373 (1/5)

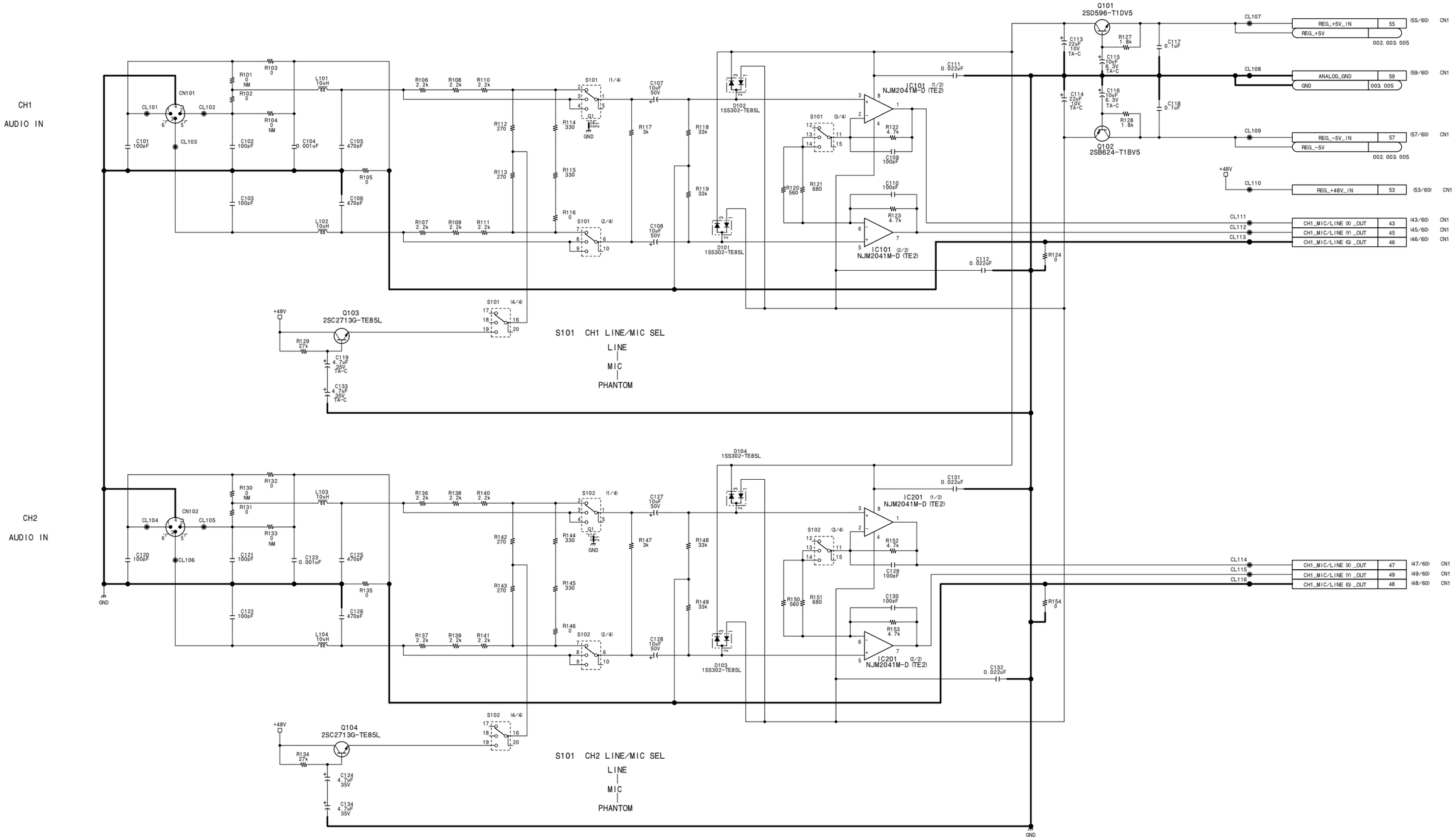

CP-373 (1/5)

BOARD NO. 1-668-841-12, 13
FOR DSR-570WS/570WSP
DSR-570_CP-373_005_1

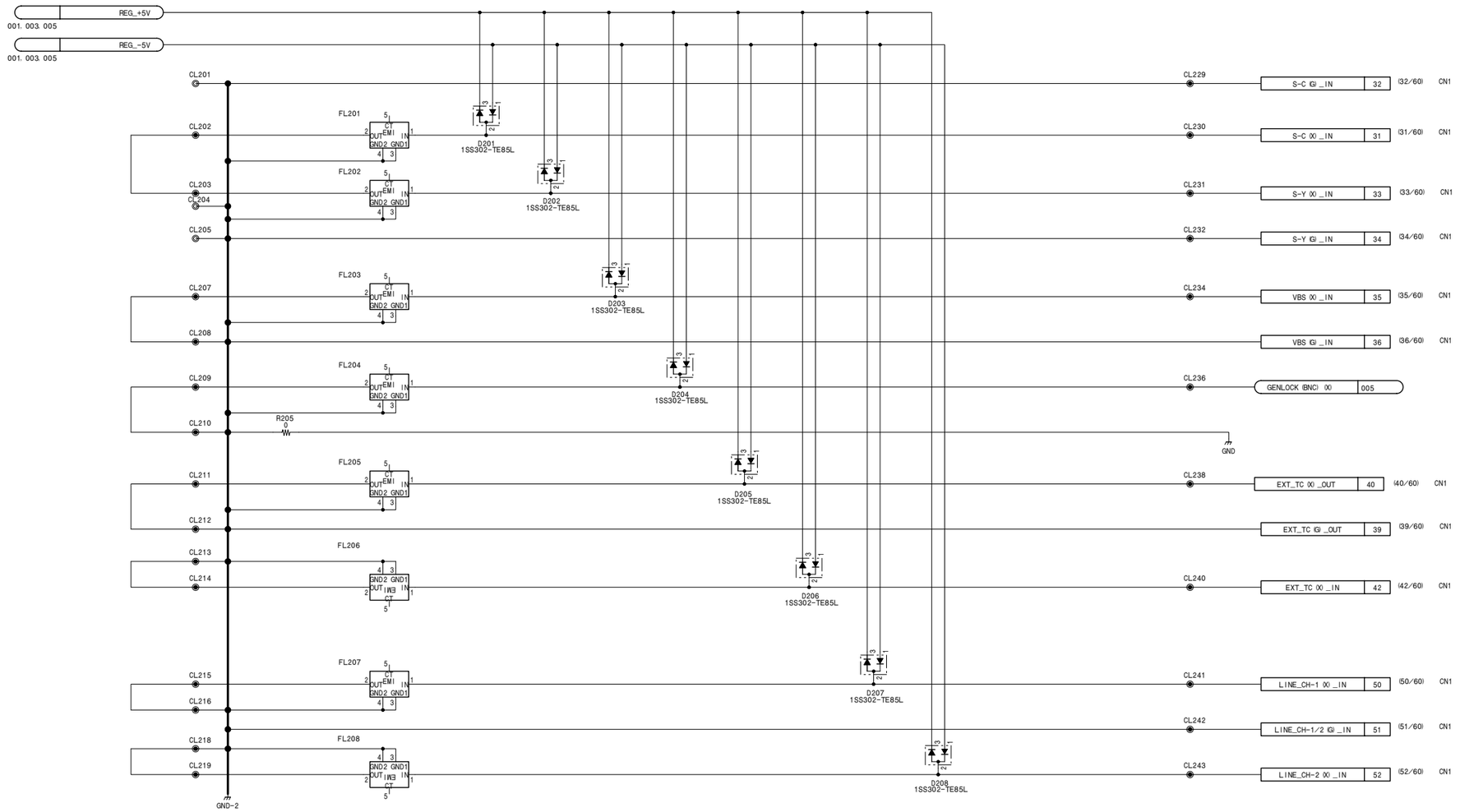

CP-373 (2/5)
BOARD NO. 1-668-841-12, 13
FOR DSR-570WS/570WSP
DSR-570_CP-373_005_2

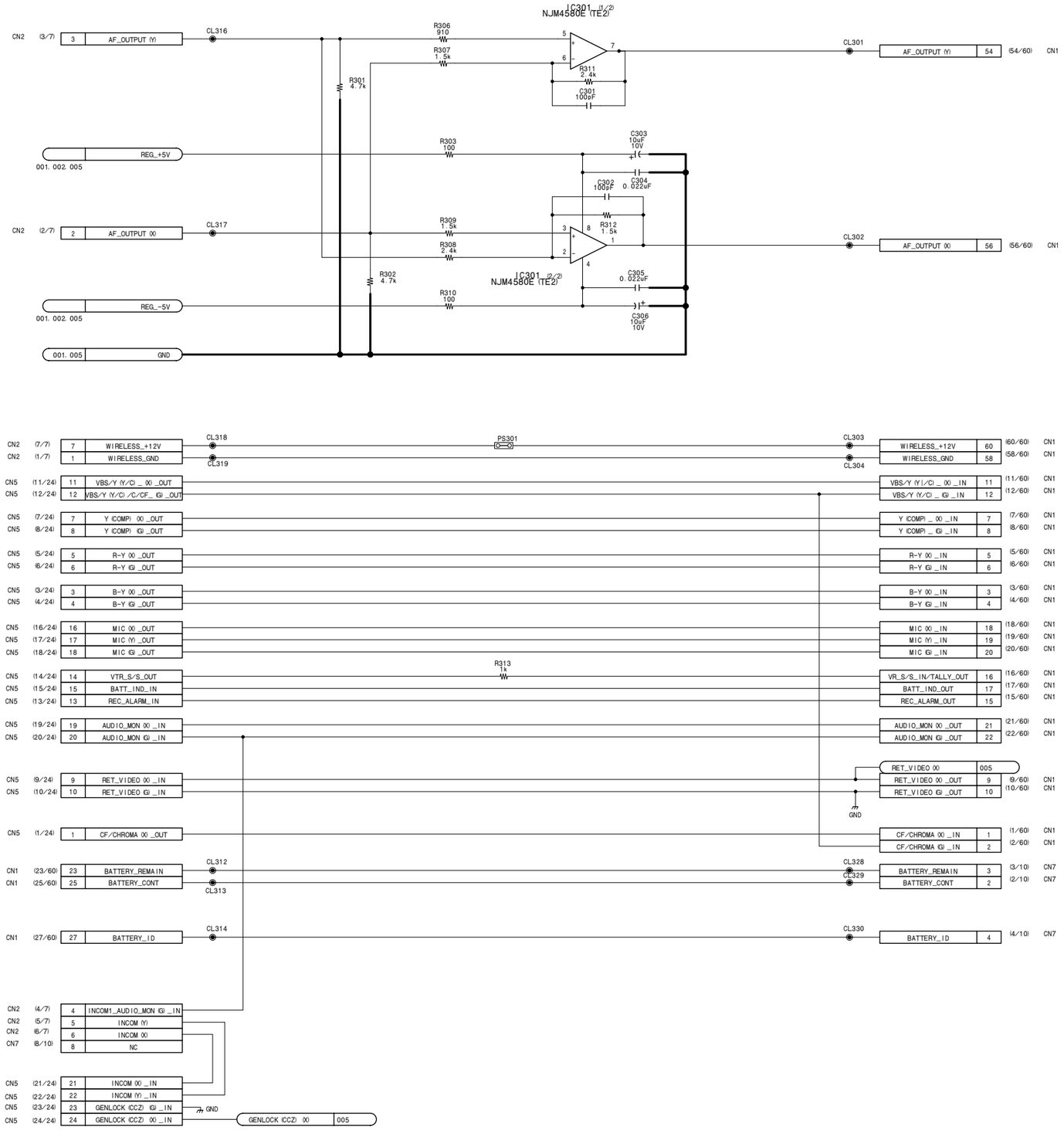

CP-373 (3/5)
BOARD NO. 1-668-841-12, 13
FOR DSR-570WS/570WSP
DSR-570_CP-373_005_3

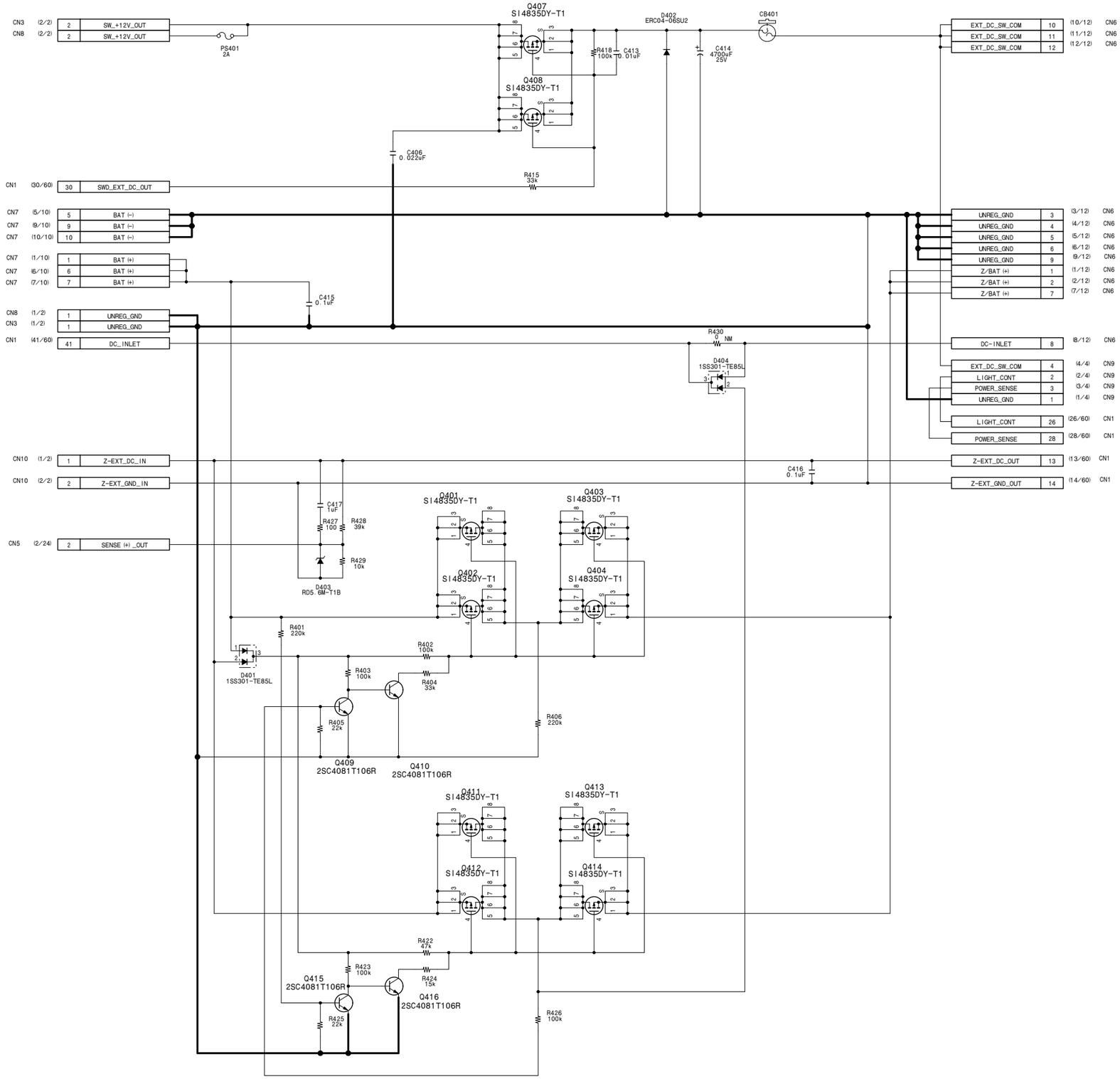

CP-373 (4/5)
BOARD NO. 1-668-841-12, 13
FOR DSR-570WS/570WSP
DSR-570_CP-373_005_4

CP-373 (5/5)

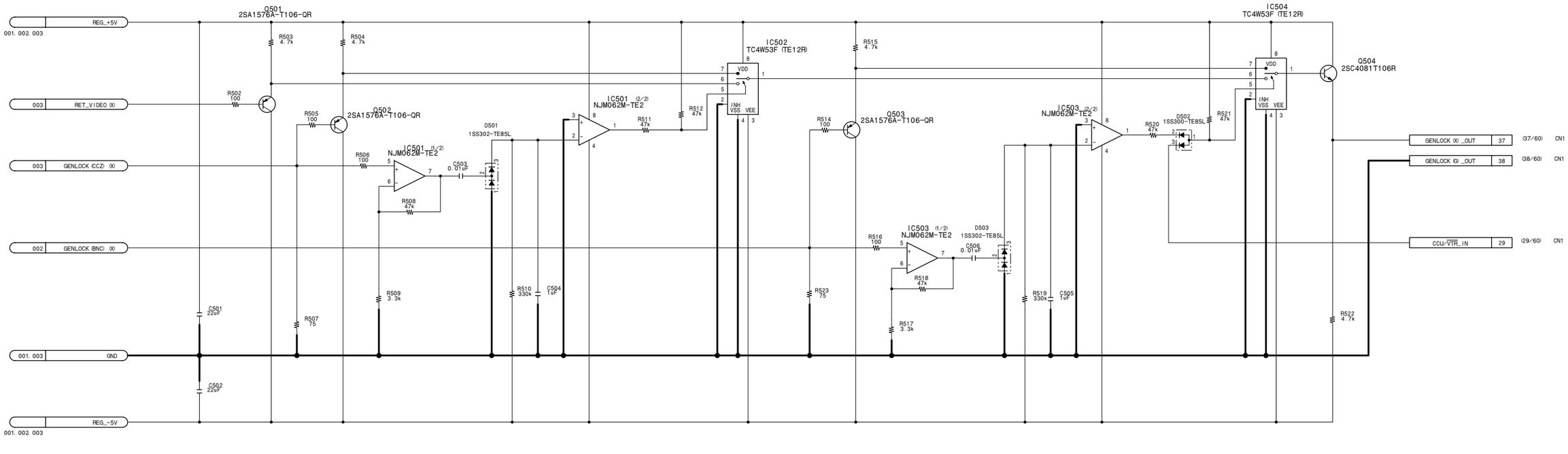

CP-373 (5/5)
BOARD NO. 1-668-841-12, 13
FOR DSR-570WS/570WSP
DSR-570_CP-373_005_5

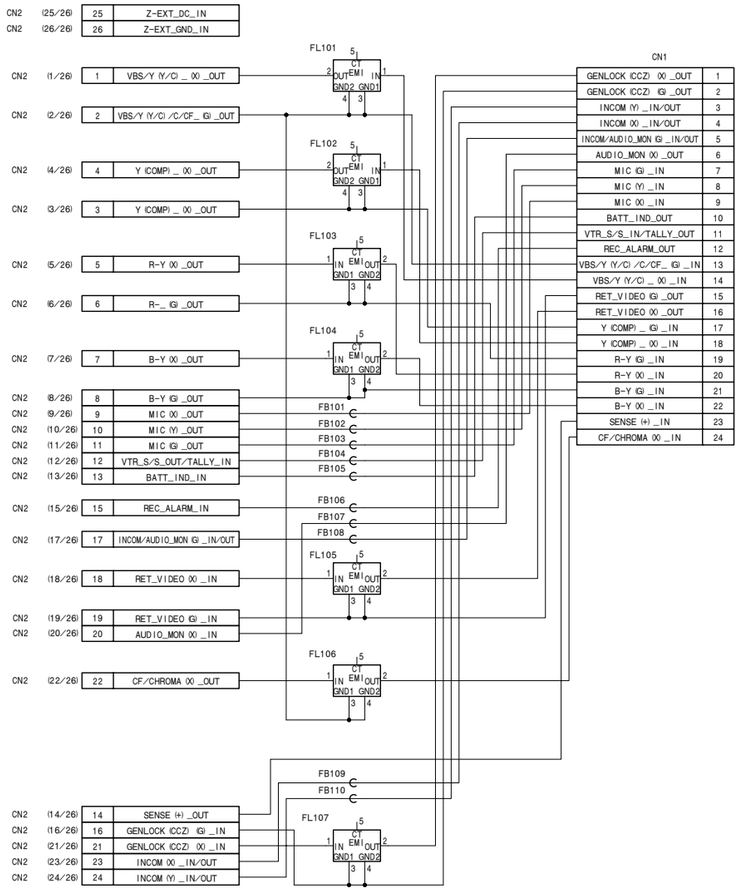

CN-2277
BOARD NO. 1-683-383-11, 12
FOR DSR-570WS/570WSP
DSR-570WS_CN-2277_003_1

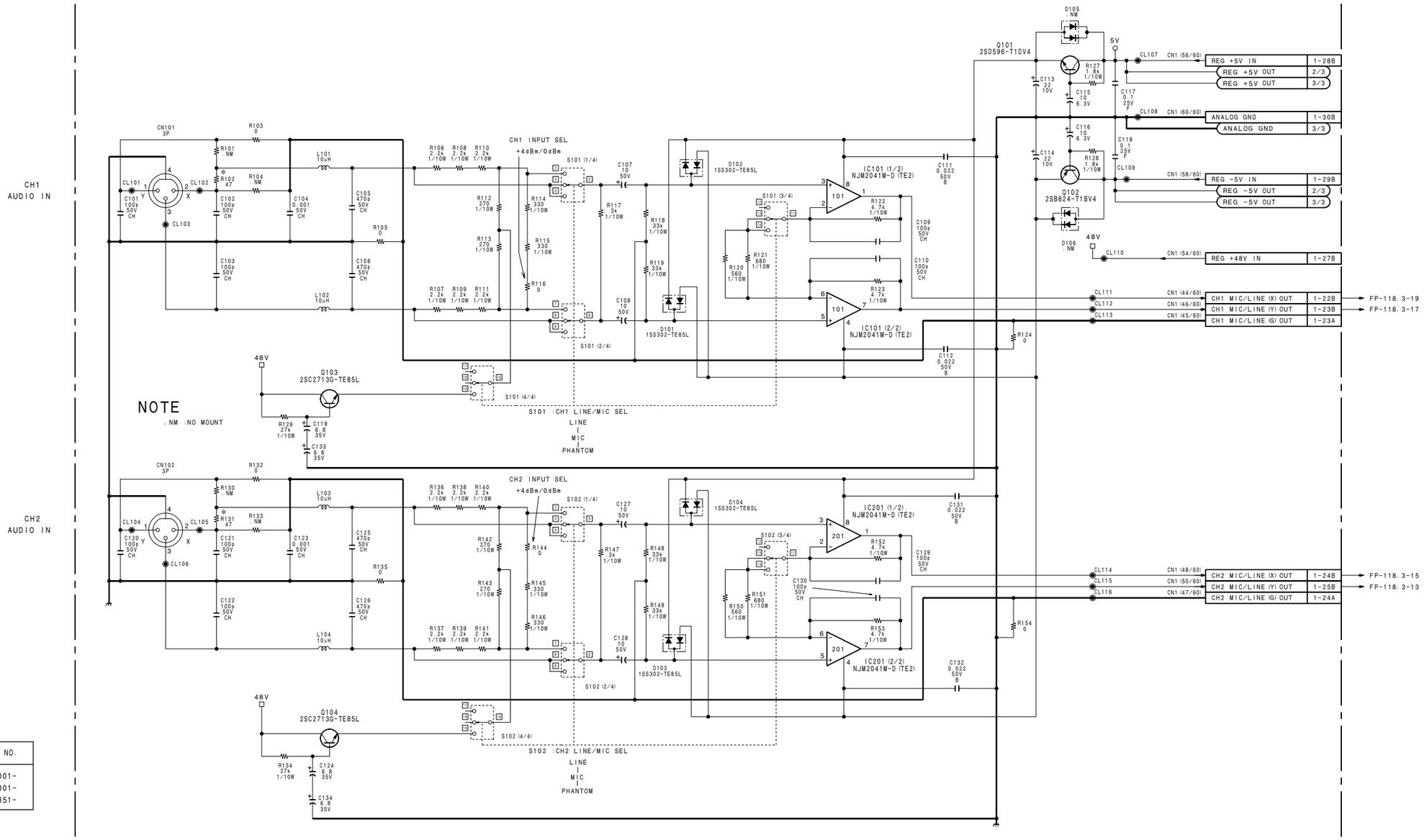

NOTE
. NM : NO MOUNT

NOTE
*

REF NO.	CHANGE INFORMATION	SERIAL NO.
R102, R131	0 → 47	(UC) 12001- (J) 32001- (CE) 40851-

CP-315 (1/3)
BOARD NO. 1-668-841-12, 13
FOR DSR-500WS/500WSP
B-DSR500WS-CP315-SM

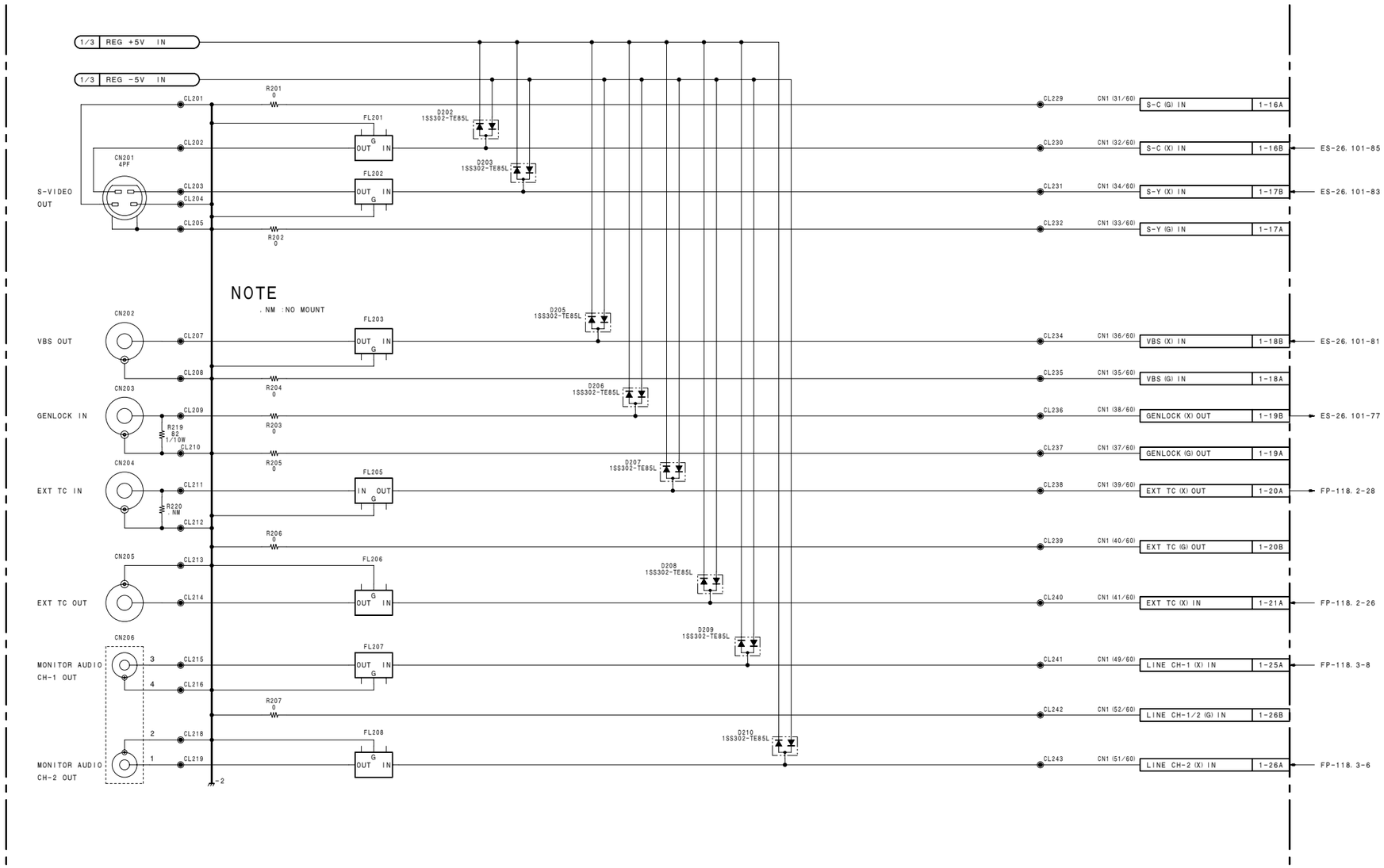

CP-315 (2/3)
BOARD NO. 1-668-841-12, 13
FOR DSR-500WS/500WSP
B-DSR500WS-CP315-SM

CP-315 (3/3) CN-1519, CN-1873, CN-1874, PS-570

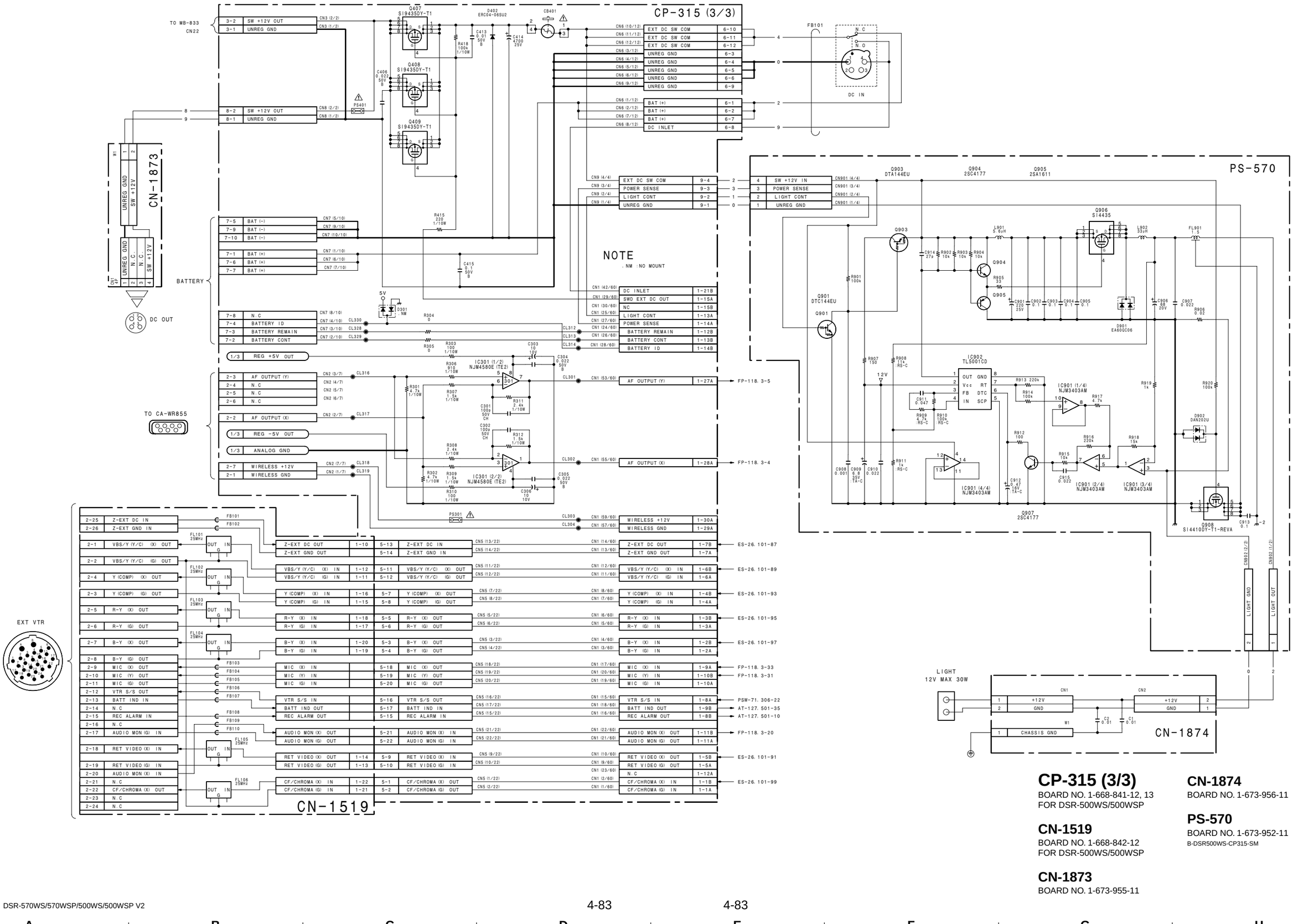

CP-315 (3/3)
BOARD NO. 1-668-841-12, 13
FOR DSR-500WS/500WSP

CN-1519
BOARD NO. 1-668-842-12
FOR DSR-500WS/500WSP

CN-1873
BOARD NO. 1-673-955-11

CN-1874
BOARD NO. 1-673-956-11

PS-570
BOARD NO. 1-673-952-11
B-DSR500WS-CP315-SM

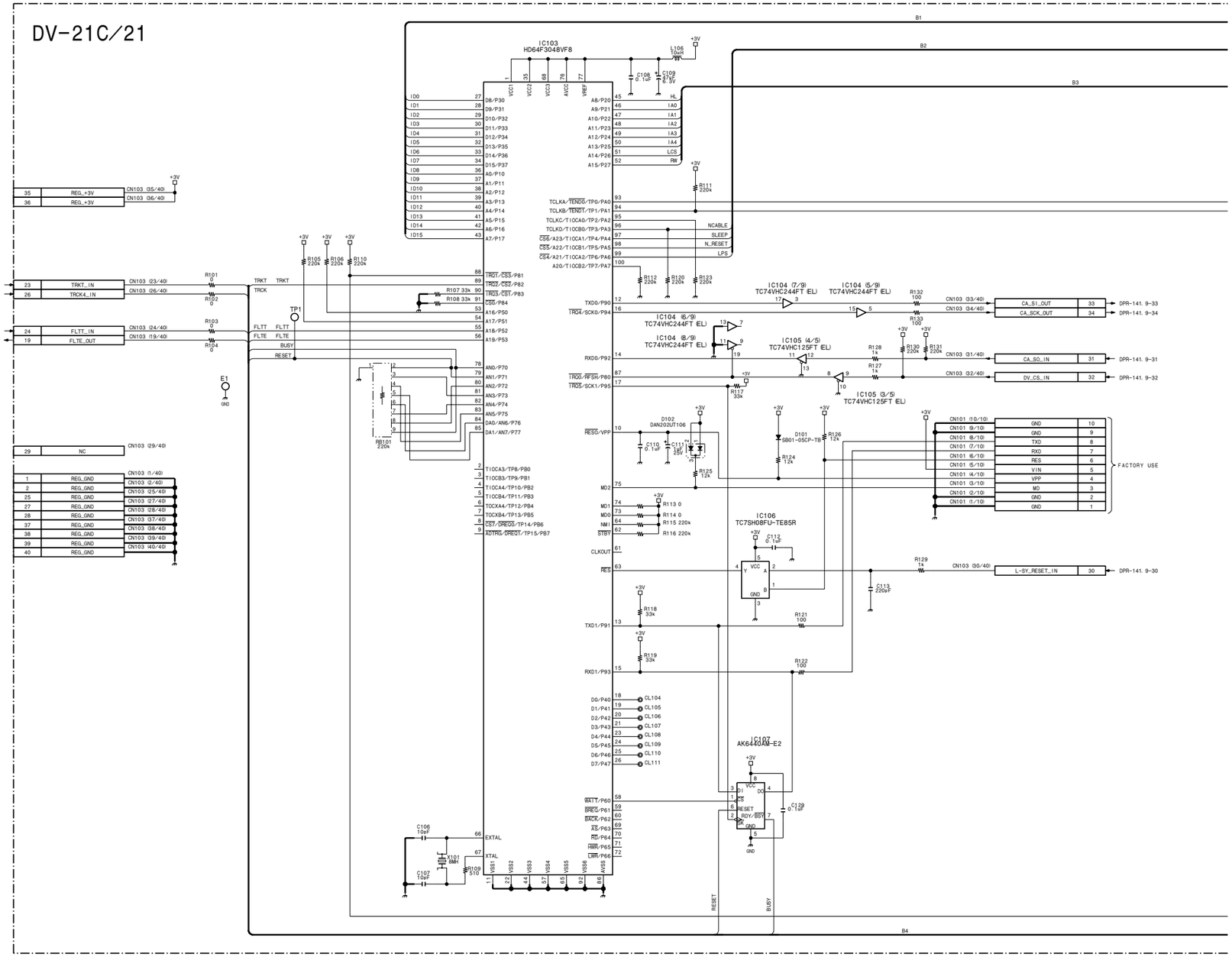
DV-21C/21
IC103
HD64F3048VF8
IC104 (7/9)
TC74VHC244FT (EL)
IC104 (5/9)
TC74VHC244FT (EL)
IC104 (6/9)
TC74VHC244FT (EL)
IC104 (8/9)
TC74VHC244FT (EL)
IC105 (4/5)
TC74VHC125FT (EL)
IC105 (3/5)
TC74VHC125FT (EL)
IC106
TC7SH08FU-TE85R
IC107
AK6440AM-E2
CA_SI_OUT
CA_SCK_OUT
CA_SO_IN
DV_CS_IN
L-SY_RESET_IN
FACTORY USE
DPR-141. 9-33
DPR-141. 9-34
DPR-141. 9-31
DPR-141. 9-32
DPR-141. 9-30
DPR-141. 9-23
DPR-141. 9-26
DPR-141. 9-24
DPR-141. 9-19
TRKT_IN
TRCK4_IN
FLTT_IN
FLTE_OUT
NC
REG_+3V
REG_GND
NCABLE
SLEEP
N_RESET
LPS
RESET
BUSY
EXTAL
XTAL
GND
TP1
E1

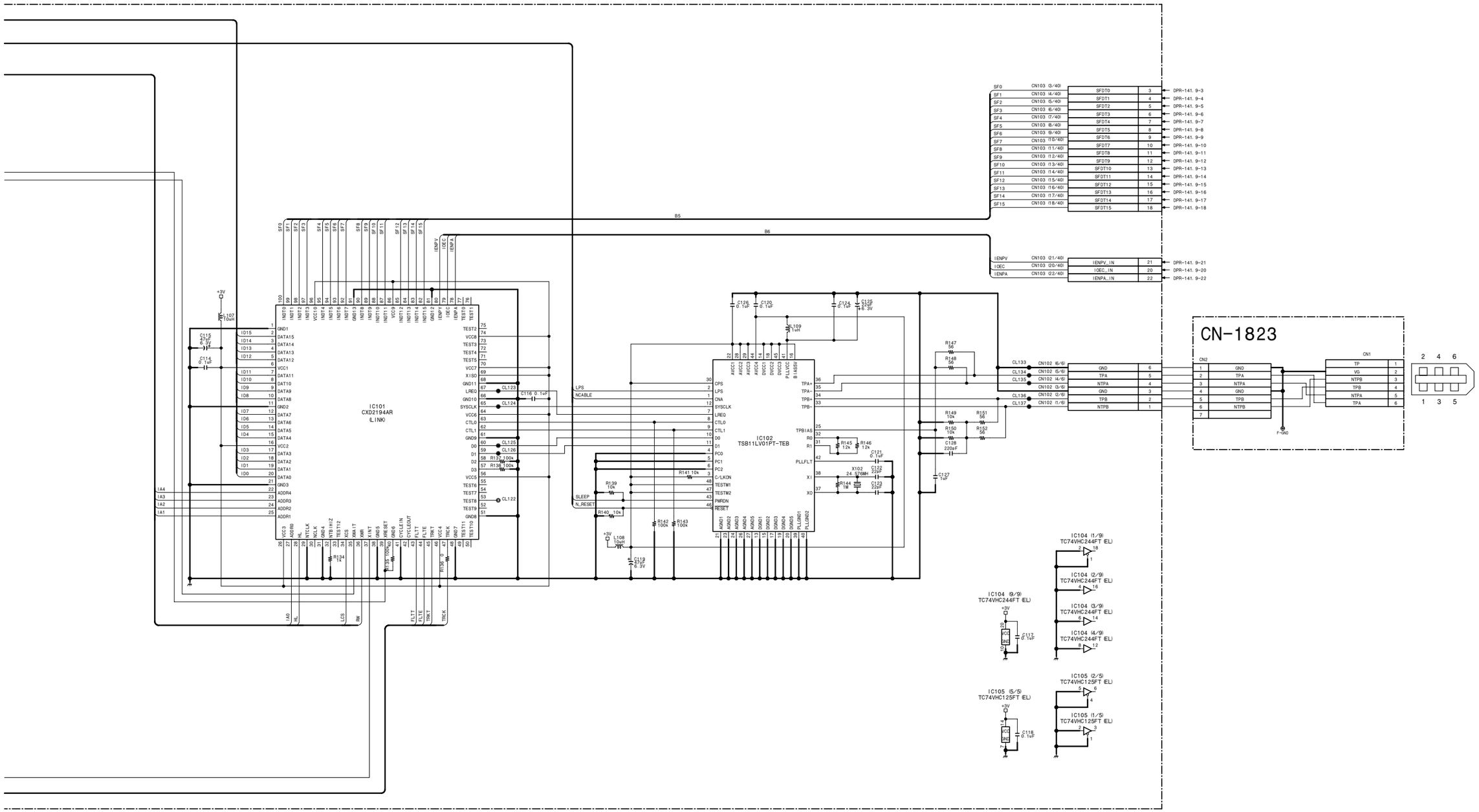

DV-21C/21
BOARD NO. 1-673-972-11

CN-1823
BOARD NO. 1-673-973-11, 12, 13
DSR-500WSL_DV-21_001

NOTE
. NM : NO MOUNT

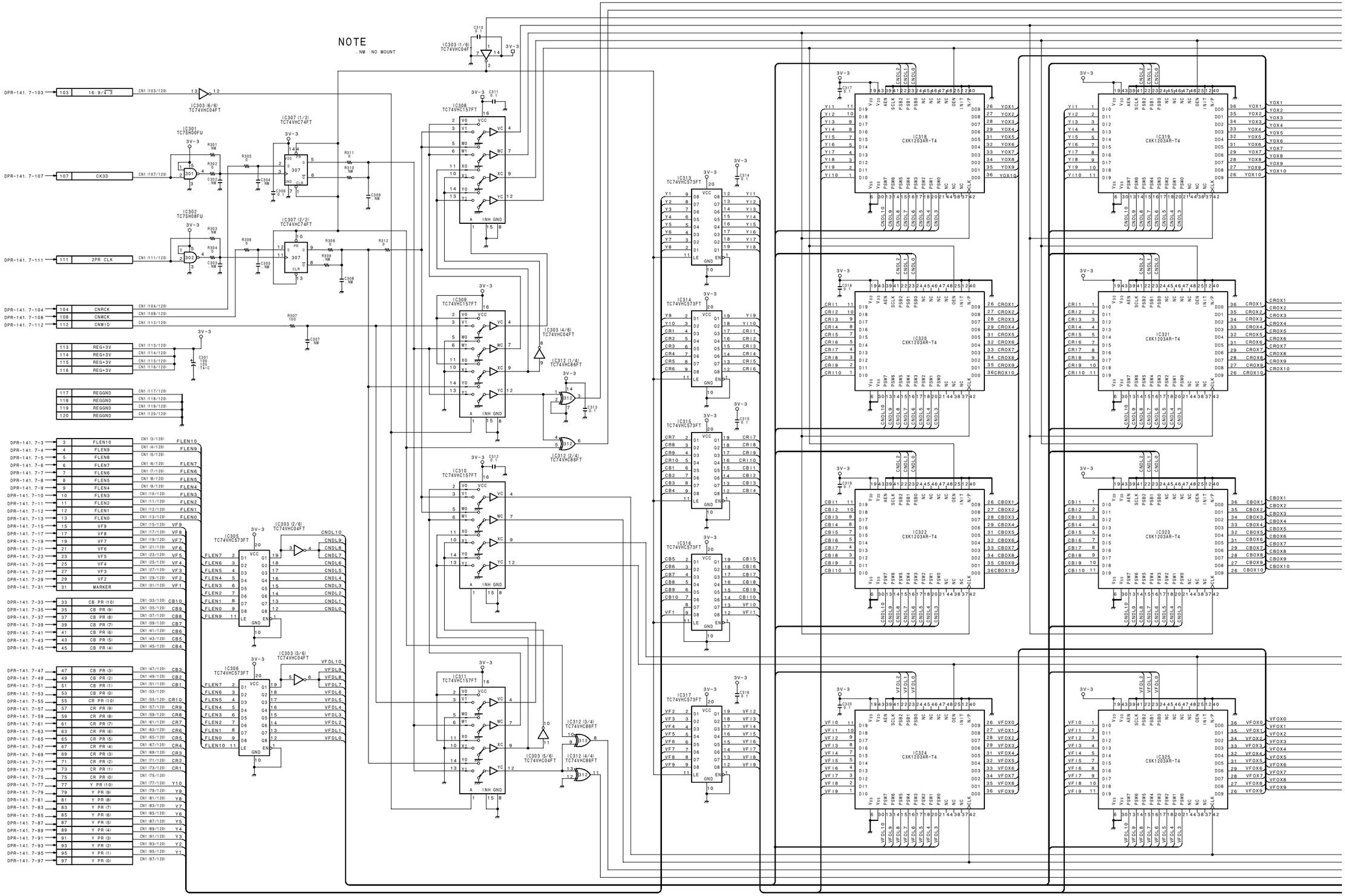

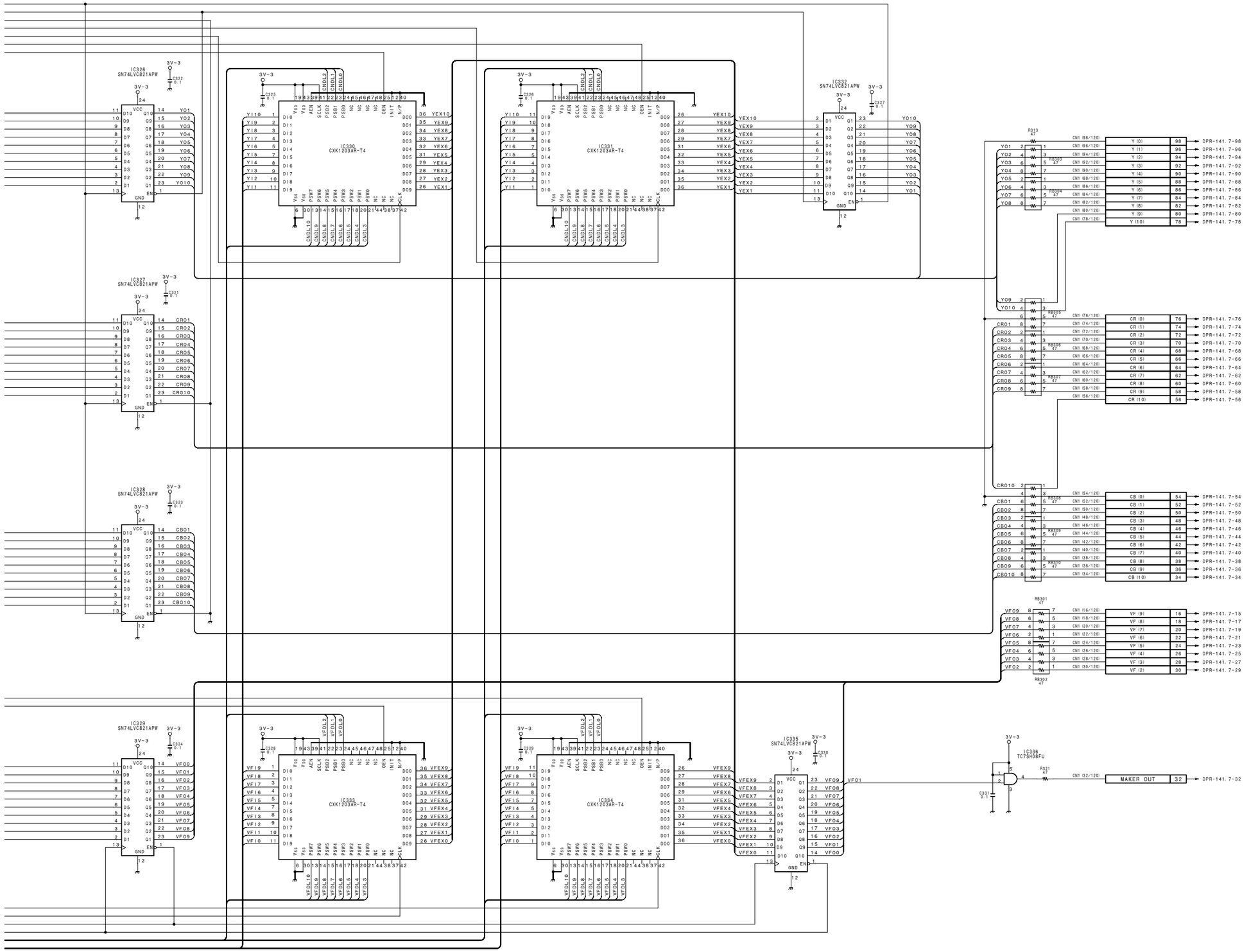

VE-44
BOARD NO. 1-673-958-11
B-DSR500WS-VE44-SM

MB-833 (1/2)

FP-118A/118

FP-118 BOARD SIDE (CN1) — MB-833 BOARD SIDE

		CN1		
50	1	REG GND		
49	2	REG GND		
48	3	REG +4.9V		
47	4	REG +4.9V		
46	5	VJ MIC (G)	OUT	16-49
45	6	VJ MIC (X)	OUT	16-48
44	7	AUDIO VOLUME	OUT	16-47
43	8	VTR TRIG	OUT	16-46
42	9	SDA (S-P) (PSW/FP)	OUT	16-45
41	10	G	OUT	14-13, 16-15, 20-29
40	11	SCLK (S/P)	OUT	14-12, 16-14, 20-30
39	12	SHIFT/LOAD	OUT	14-11, 16-13, 20-31
38	13	RCK	OUT	14-10, 16-12, 20-32
37	14	LIGHT SW	OUT	14-32
36	15	SDA (S-P) (FP/AA)	IN	14-31
35	16	SDA (P-S) (FP/AA)	IN	14-30
34	17	FAN ON	OUT	8-80
33	18	N.C		
32	19	MIC1 (X)	OUT	14-28
31	20	MIC1 (Y)	OUT	14-27
30	21	MIC1 (G)	OUT	14-26
29	22	EARPHONE SW (Y)	IN	14-25
28	23	EARPHONE (X)	OUT	14-24
27	24	EARPHONE (G)	OUT	14-23
26	25	L:YC CS	IN	6-21
25	26	L:VBID CS	IN	6-17
24	27	BACK TALLY	IN	14-22
23	28	BACK TALLY GND		14-21
22	29	BACK TALLY SW	OUT	14-20
21	30	INT VTR TALLY	IN	20-17
20	31	CS VTR	IN	20-16
19	32	SDA (C/V)	OUT	20-15
18	33	SDA (V/C)	IN	20-14
17	34	SCLK VTR	IN	20-13
16	35	BATT ALARM	IN	20-12
15	36	REG +9.0V		
14	37	REG +9.0V		
13	38	N.C		
12	39	L:DV CS	IN	7-78
11	40	H:YC BUSY	OUT	6-22
10	41	L:RESET	OUT	6-4, 10-46
9	42	1/2 VD	OUT	6-1, 9-7, 10-45
8	43	SV TRKD	OUT	6-2, 10-43
7	44	SY SCK	IN	7-99, 10-42
6	45	SY SO	IN	7-100, 10-41
5	46	SY SI	OUT	7-97, 10-40
4	47	L:FS CONT CS	IN	7-98
3	48	CSYNC (VTR)	OUT	6-35, 8-65
2	49	L:IP LI OFF	IN	7-96
1	50	L:SY-SV CS	IN	10-26

FP-118A/118

FP-118 BOARD SIDE (CN2) — MB-833 BOARD SIDE

		CN2		
50	1	L:SV READY	OUT	10-25
49	2	MIC GND		10-24
48	3	MIC VDD		10-23
47	4	MIC SCL	I/O	10-22
46	5	MIC SDA	I/O	10-21
45	6	L:SP SV CS	IN	7-79
44	7	L:SY CTLG CS	IN	7-80
43	8	L:NFIL CS	IN	7-77
42	9	H:DA LD		N.C
41	10	L:SY EEPROM BUSY	OUT	7-75
40	11	L:SY EEPROM CS	IN	7-76
39	12	L:SY EEPROM WE	IN	7-73
38	13	H:BASE PWR ON		N.C
37	14	H:BASE MUTE	IN	8-75
36	15	CA SCK	IN	7-71
35	16	CA SO	IN	7-72
34	17	CA SI	OUT	7-69
33	18	L:AUX CS	IN	7-70
32	19	L:IP CS	IN	7-67
31	20	L:IP CONNECT	OUT	7-68
30	21	L:IP PWR ON	IN	7-65
29	22	H:POWER SAVE	IN	NC
28	23	EXT TC INPUT (X)	OUT	19-40
27	24	EXT TC (G)		19-39
26	25	EXT TC OUTPUT (X)	IN	19-42
25	26	H:MAIN SW ON	OUT	16-32
24	27	DC INLET	OUT	19-41, 20-7
23	28	L:POWER ON (FP-PSW)	IN	16-31
22	29	LIGHT CONT	IN	19-26
21	30	BATTERY ID	OUT	19-27, 20-6
20	31	REG -5.0V		
19	32	REG +5.0V		
18	33	REG +5.0V		
17	34	REG +6.6V		
16	35	REG +6.6V		
15	36	REG GND		
14	37	REG GND		
13	38	REG GND		
12	39	REG +3.4V		
11	40	REG +3.4V		
10	41	REG GND		
9	42	REG GND		
8	43	REG GND		
7	44	LITHIUM	IN	7-87
6	45	SWD EXT DC		
5	46	SWD EXT DC		
4	47	SWD EXT DC		
3	48	UNREG GND		
2	49	UNREG GND		
1	50	UNREG GND		

SELFCHECK

	CN9		
1	SWD EXT DC		
2	UNREG GND		
3	JIG SCK		10-50
4	JIG SI		10-49
5	JIG SO		10-48
6	L:SV-JIG READY		10-47
7	1/2 VD		1-42, 6-1, 10-45

FP-118A/118

FP-118 BOARD SIDE (CN3) — MB-833 BOARD SIDE

		CN3		
40	1	CH-1 REC AUDIO (X)	IN	7-27
39	2	CH-1/2 REC AUDIO (G)	IN	7-26
38	3	CH-2 REC AUDIO (X)	IN	7-25
37	4	H:AUDIO PB	OUT	7-24
36	5	AUDIO CH-1 (X)	OUT	7-23
35	6	AUDIO CH1/2 (G)	OUT	7-22
34	7	AUDIO CH-2 (X)	OUT	7-21
33	8	CCZ MIC (X)	IN	19-18
32	9	CCZ MIC (Y)	IN	19-19
31	10	CCZ MIC (G)	IN	19-20
30	11	REG -5.0V		
29	12	REG -5.0V		
28	13	REG -5.0V		
27	14	REG GND		
26	15	REG GND		
25	16	REG GND		
24	17	REG +5.0V		
23	18	REG +5.0V		
22	19	REG +5.0V		
21	20	CCZ AUDIO MONI (G)	OUT	19-22
20	21	CCZ AUDIO MONI (X)	OUT	19-21
19	22	CH-1 MIC/LINE (X)	OUT	19-43
18	23	CH-1 MIC/LINE (G)	OUT	19-46
17	24	CH-1 MIC/LINE (Y)	OUT	19-45
16	25	REG GND		
15	26	CH-2 MIC/LINE (X)	OUT	19-47
14	27	CH-2 MIC/LINE (G)	OUT	19-48
13	28	CH-2 MIC/LINE (Y)	OUT	19-49
12	29	N.C		
11	30	REG +5.3V		
10	31	REG +5.3V		
9	32	M +6V		
8	33	LINE CH-1 (X)	IN	19-50
7	34	LINE CH-1/2 (G)	IN	19-51
6	35	LINE CH-2 (X)	IN	19-52
5	36	AF OUTPUT (Y)	OUT	19-54
4	37	AF OUTPUT (X)	OUT	19-56
3	38	ANTON V	OUT	19-23
2	39	REG GND		
1	40	ANTON AUTO	IN	19-25

SV-213

SV-213 BOARD SIDE (CN502) — MB-833 BOARD SIDE

		CN10		
50	1	REG GND		
49	2	REG GND		
48	3	REG -5.0V		
47	4	REG +5.0V		
46	5	REG +5.0V		
45	6	REG GND		
44	7	REG GND		
43	8	REG +3.4V		
42	9	REG +3.4V		
41	10	M GND		
40	11	M GND		
39	12	M GND		
38	13	M GND		
37	14	M GND		
36	15	M +6V BACKUP		23-1
35	16	M +6V		
34	17	M +6V		
33	18	M +6V		
32	19	M +6V		
31	20	N.C		
30	21	MIC SDA	I/O	2-5
29	22	MIC SCL	OUT	2-4
28	23	MIC VDD		2-3
27	24	MIC GND		2-2
26	25	L:SV READY	IN	2-1
25	26	L:SY-SV CS	OUT	1-50
24	27	L:SP-SV CS	OUT	7-82
23	28	SP SI	IN	7-81
22	29	SP SO	OUT	7-84
21	30	SP SCK	OUT	7-83
20	31	TRKD	IN	7-86
19	32	FLTD	IN	7-85
18	33	L:SV-SFY CS	IN	7-88
17	34	SV SCK	IN	7-90
16	35	SV SO	IN	7-89
15	36	SV SI	OUT	7-92
14	37	TBC REN	IN	7-91
13	38	DRUM BANK	IN	7-94
12	39	JSWP	IN	7-93
11	40	SY SI	IN	1-46, 7-97
10	41	SY SO	OUT	1-45, 7-100
9	42	SY SCK	OUT	1-44, 7-99
8	43	SV TRKD	IN	1-43, 6-2
7	44	N.C		
6	45	1/2 VD	IN	1-42, 6-1, 9-7
5	46	L:RESET	IN	1-41, 6-4
4	47	L:SV-JIG READY		9-6
3	48	JIG SO		9-5
2	49	JIG SI		9-4
1	50	JIG SCK		9-3

VA-190

VA-190 BOARD SIDE (CN4) — MB-833 BOARD SIDE

		CN5		
30	1	R VA (G)	IN	6-80
29	2	R VA (X)	IN	6-79
28	3	G VA (G)	IN	6-78
27	4	G VA (X)	IN	6-77
26	5	B VA (G)	IN	6-76
25	6	B VA (X)	IN	6-75
24	7	FB CLP GND	IN	6-74
23	8	R FB CLP	OUT	6-73
22	9	G FB CLP	OUT	6-72
21	10	B FB CLP	OUT	6-71
20	11	CLP1	OUT	15-24, 6-70
19	12	P BLKG	OUT	15-27, 6-69
18	13	VA ENABLE	OUT	20-67
17	14	AVD	OUT	6-64, 15-33
16	15	AHD	OUT	6-63, 15-34
15	16	LSI RESET	OUT	6-5, 20-69
14	17	SDA (D/A)	OUT	6-57, 8-43, 15-43, 20-20
13	18	SCL (D/A)	OUT	6-58, 8-44, 15-42, 20-21
12	19	LD (VA2)	OUT	20-27
11	20	LD (VA1)	OUT	20-28
10	21	+18DB ON/OFF	OUT	20-68, 6-55
9	22	DPR	OUT	16-50, 6-61
8	23	REG -5.0V		
7	24	REG -5.0V		
6	25	REG +5.3V		
5	26	REG +5.3V		
4	27	REG +9.0V		
3	28	REG +9.0V		
2	29	REG GND		
1	30	REG GND		

RP-91

RP-91 BOARD SIDE (CN773) — MB-833 BOARD SIDE

		CN11		
1	1	CLK135	OUT	7-31
2	2	REG GND		
3	3	DRCK REF	OUT	7-33
4	4	REG GND		
5	5	TRPCS	OUT	7-35
6	6	FRPCS	OUT	7-38
7	7	REG GND		
8	8	VRCKCS	IN	7-40
9	9	REG GND		
10	10	DTSC0	OUT	7-42
11	11	DTSC1	OUT	7-41
12	12	DTSC2	OUT	7-44
13	13	DTSC3	OUT	7-43
14	14	DTSC4	OUT	7-46
15	15	DTSC5	OUT	7-45
16	16	DTSC6	OUT	7-48
17	17	DTSC7	OUT	7-47
18	18	REG GND		
19	19	AFREF	IN	7-49
20	20	SYCS	IN	7-52
21	21	SCDVCS	IN	7-51
22	22	VADVCS	IN	7-54
23	23	REG GND		
24	24	VPCKCS	IN	7-56
25	25	REG GND		
26	26	DTCS0	IN	7-58
27	27	DTCS1	IN	7-57
28	28	DTCS2	IN	7-60
29	29	DTCS3	IN	7-59
30	30	DTCS4	IN	7-62
31	31	DTCS5	IN	7-61
32	32	DTCS6	IN	7-64
33	33	DTCS7	IN	7-63
34	34	N.C		
35	35	REG GND		
36	36	REG GND		
37	37	REG GND		
38	38	REG +3.1V		
39	39	REG +3.4V		
40	40	REG +3.1V		
41	41	REG +3.4V		
42	42	REG +5.0V		
43	43	REG +6.6V		
44	44	REG +5.0V		
45	45	REG +6.6V		

4-88

DPR-141B/141

DPR-141B/141 BOARD SIDE (CN2) — MB-833 BOARD SIDE

CN6

1-42. 9-7. 10-45	OUT	1/2 VD	1	2	SV TRKD	OUT	1-43. 10-43
		N.C	3	4	L:RESET	OUT	1-41. 10-46
5-16. 20-69	OUT	LSI RESET	5	6	LD (DPR)	OUT	20-70
20-71	OUT	LD (PP)	7	8	LD (PR)	OUT	20-72
20-73	OUT	LD (RC)	9	10	SCL (DSP)	OUT	20-74
20-75	OUT	SDA3 (DSP)	11	12	SDA2 (DSP)	OUT	20-76
20-77	OUT	SDA1 (DSP)	13	14	SDA0 (DSP)	OUT	20-78
20-79	OUT	TITLE	15	16	TITLE BACK	OUT	20-80
1-26	OUT	L:VBID CS	17	18	N.C		
8-78. 19-38	OUT	GENLOCK (G)	19	20	GENLOCK (X)	OUT	8-77. 19-37
1-25	OUT	L:YC CS	21	22	H:YC BUSY	IN	1-40
		N.C	23	24	CAL	OUT	16-40
		N.C	25	26	H:WIDE ID ON	IN	8-76
8-73	IN	H:EE	27	28	H:WIDE MODE		8-74
20-55	IN	L:YC CONNECT	29	30	N.C		
8-69	IN	BFG (VTR)	31	32	CLP P (VTR)	IN	8-70
		N.C	33	34	BF (VTR)	IN	8-68
1-48. 8-65	IN	CSYNC (VTR)	35	36	LALT (VTR)	IN	8-66
8-63		VDAC GND	37	38	VDAC CB	IN	8-64
8-61	IN	VDAC Y	39	40	VDAC CR	IN	8-62
8-59		COMP GND	41	42	Y	IN	8-60
8-57	IN	R-Y	43	44	B-Y	IN	8-58
8-55	IN	BLKG	45	46	CF	OUT	8-56
8-53	OUT	27MH$_Z$ (G)	47	48	27MH$_Z$ (X)	IN	8-54
8-51	IN	VF-Y	49	50	MARKER	IN	8-52
8-49. 20-57	OUT	HD	51	52	VD	OUT	8-50. 20-56
8-47	IN	14MH$_Z$ (G)	53	54	14MH$_Z$ (X)	IN	8-48
5-21. 20-68		+18DB ON/OFF	55	56	16:9/4:3	OUT	20-54
5-17. 8-43. 15-43. 20-20	OUT	SDA (D/A)	57	58	SCL (D/A)	OUT	5-18. 8-44. 15-42. 20-21
8-41. 15-45. 20-18	OUT	SDA (EEPROM)	59	60	SCL (EEPROM)	OUT	8-42. 15-44. 20-19
5-22. 16-50		DPR	61	62	HTSG	IN	15-35
5-15. 15-34	IN	AHD	63	64	AVD	IN	5-14. 15-33
15-32	OUT	36MH$_Z$ (G)	65	66	36MH$_Z$ (X)	OUT	15-31
15-29	OUT	18MH$_Z$ (G)	67	68	18MH$_Z$ (X)	OUT	15-28
5-12. 15-27	IN	P BLKG	69	70	CLP1	IN	5-11. 15-24
5-10	IN	B FB CLP	71	72	G FB CLP	IN	5-9
5-8	IN	R FB CLP	73	74	FB CLP GND	IN	5-7
5-6	OUT	B VA (X)	75	76	B VA (G)	OUT	5-5
5-4	OUT	G VA (X)	77	78	G VA (G)	OUT	5-3
5-2	OUT	R VA (X)	79	80	R VA (G)	OUT	5-1

DPR-141B/141

DPR-141B/141 BOARD SIDE (CN1) — MB-833 BOARD SIDE

CN7

		REG GND	1	2	REG GND		
		REG GND	3	4	REG GND		
		REG GND	5	6	REG GND		
		REG GND	7	8	REG GND		
		REG -5.0V	9	10	REG -5.0V		
		REG +5.0V	11	12	REG +5.0V		
		REG +5.3V	13	14	REG +5.3V		
		REG +6.6V	15	16	REG +6.6V		
		REG +3.4V	17	18	REG +3.4V		
		REG +3.1V	19	20	REG +3.1V		
3-7	IN	AUDIO CH-2 (X)	21	22	AUDIO CH1/2 (G)	IN	3-6
3-5	IN	AUDIO CH-1 (X)	23	24	H:AUDIO PB	IN	3-4
3-3	OUT	CH-2 REC AUDIO (X)	25	26	CH-1/2 REC AUDIO (G)	OUT	3-2
3-1	OUT	CH-1 REC AUDIO (X)	27	28	REG GND		
		REG GND	29	30	REG GND		
11-1	IN	CLK135	31	32	REG GND		
11-3	IN	DRCK REF	33	34	REG GND		
11-5	IN	TRPCS	35	36	REG GND		
		REG GND	37	38	FRPCS	IN	11-6
		REG GND	39	40	VRCKCS	OUT	11-8
11-11	IN	DTSC1	41	42	DTSC0	IN	11-10
11-13	IN	DTSC3	43	44	DTSC2	IN	11-12
11-15	IN	DTSC5	45	46	DTSC4	IN	11-14
11-17	IN	DTSC7	47	48	DTSC6	IN	11-16
11-19	OUT	AFREF	49	50	REG GND		
11-21	OUT	SCDVCS	51	52	SYCS	OUT	11-20
		REG GND	53	54	VADVCS	OUT	11-22
		REG GND	55	56	VPCKCS	OUT	11-24
11-27	OUT	DTCS1	57	58	DTCS0	OUT	11-26
11-29	OUT	DTCS3	59	60	DTCS2	OUT	11-28
11-31	OUT	DTCS5	61	62	DTCS4	OUT	11-30
11-33	OUT	DTCS7	63	64	DTCS6	OUT	11-32
2-21	OUT	L:IP PWR ON	65	66	N.C		
2-19	OUT	L:IP CS	67	68	L:IP CONNECT	IN	2-20
2-17	IN	CA SI	69	70	L:AUX CS	OUT	2-18
2-15	OUT	CA SCK	71	72	CA SO	OUT	2-16
2-12	OUT	L:SY EEPROM WE	73	74	REG GND		
2-10	IN	L:SY EEPROM BUSY	75	76	L:SY EEPROM CS	OUT	2-11
2-8	OUT	L:NFIL CS	77	78	L:DV CS	OUT	1-39
2-6	OUT	L:SP SV CS	79	80	L:SY CTLG CS	OUT	2-7
10-28	OUT	SP SI	81	82	L:SP-SV CS	IN	10-27
10-30	IN	SP SCK	83	84	SP SO	IN	10-29
10-32	OUT	FLTD	85	86	TRKD	OUT	10-31
2-44	OUT	LITHIUM	87	88	L:SV-SFY CS	OUT	10-33
10-35	OUT	SV SO	89	90	SV SCK	OUT	10-34
10-37	OUT	TBC REN	91	92	SV SI	IN	10-36
10-39	OUT	JSWP	93	94	DRUM BANK	OUT	10-38
		N.C	95	96	L:IP LI OFF	OUT	1-49
1-46. 10-40	IN	SY SI	97	98	L:FS CONT CS	OUT	1-47
1-44. 10-42	OUT	SY SCK	99	100	SY SO	OUT	1-45. 10-41

ES-26

ES-26 BOARD SIDE (CN101) — MB-833 BOARD SIDE

CN8

		REG GND	1	2	REG GND		
		REG GND	3	4	REG GND		
		REG GND	5	6	REG GND		
		REG GND	7	8	REG GND		
		REG -5.0V	9	10	REG -5.0V		
		REG +5.0V	11	12	REG +5.0V		
		REG +5.3V	13	14	REG +5.3V		
		REG +9.0V	15	16	REG +9.0V		
		REG +3.4V	17	18	REG +3.4V		
		N.C	19	20	N.C		
16-38	IN	VBS (BNC) (X)	21	22	VBS (BNC) (G)	IN	16-37
16-36	IN	VBS (RM) (X)	23	24	VBS (RM) (G)	IN	16-35
14-15	IN	VF VIDEO (X)	25	26	VF VIDEO (G)	IN	14-16
14-17	IN	B-Y (VF)	27	28	R-Y (VF)	IN	14-18
14-19	IN	SYNC (VF)	29	30	WIDE DET	IN	20-42
15-23	IN	VCO CTL	31	32	FLD	IN	15-25
20-65	OUT	LD (ES2)	33	34	LD (ES1)	OUT	20-64
20-63	OUT	LD (ES4)	35	36	LD (ES3)	OUT	20-62
20-61	OUT	VF CHR BACK	37	38	VF CHR	OUT	20-60
20-59	IN	NTSC/PAL	39	40	GENLOCK INT/EXT	IN	20-58
6-59. 15-45. 20-18	I/O	SDA (EEPROM)	41	42	SCL (EEPROM)	OUT	6-60. 15-44. 20-19
5-17. 6-57. 15-43. 20-20	OUT	SDA (D/A)	43	44	SCL (D/A)	OUT	5-18. 6-58. 15-42. 20-21
		N.C	45	46	N.C		
6-53	OUT	14MH$_Z$ (G)	47	48	14MH$_Z$ (X)	OUT	6-54
6-51. 20-57	IN	HD	49	50	VD	IN	6-52. 20-56
6-49	OUT	VF-Y	51	52	MARKER	OUT	6-50
6-47	OUT	27MH$_Z$ (G)	53	54	27MH$_Z$ (X)	OUT	6-48
6-45	OUT	BLKG	55	56	CF	IN	6-46
6-43	OUT	R-Y	57	58	B-Y	OUT	6-44
6-41		COMP GND	59	60	Y	OUT	6-42
6-39	IN	VDAC Y	61	62	VDAC CR	IN	6-40
6-37		VDAC GND	63	64	VDAC CB	IN	6-38
6-35. 1-48	IN	CSYNC (VTR)	65	66	LALT (VTR)	IN	6-36
N.C		SELH	67	68	BF (VTR)	IN	6-34
6-31	IN	BFG (VTR)	69	70	CLP P (VTR)	IN	6-32
		N.C	71	72	N.C		
6-27	OUT	H:EE	73	74	H:WIDE MODE		6-28
2-14	OUT	H:BASE MUTE	75	76	H:WIDE ID ON	OUT	6-26
6-20. 19-37	OUT	GENLOCK (X)	77	78	GENLOCK (G)	OUT	6-19. 19-38
		N.C	79	80	FAN ON	IN	1-17
19-35	IN	VBS/MON (X)	81	82	VBS/MON (G)	IN	19-36
19-33	IN	S-Y (X)	83	84	S-Y (G)	IN	19-34
19-31	IN	S-C (X)	85	86	S-C (G)	IN	19-32
19-13. 20-9	IN	CCZ DC	87	88	CCZ DC GND		19-14
19-11	IN	VBS/Y (CCZ) (X)	89	90	VBS/Y (CCZ) (G)	IN	19-12
19-9	OUT	RET (CCZ) (X)	91	92	RET (CCZ) (G)	OUT	19-10
19-7	IN	Y (CCZ) (X)	93	94	Y (CCZ) (G)	IN	19-8
19-5	IN	R-Y (CCZ) (X)	95	96	R-Y (CCZ) (G)	IN	19-6
19-3	IN	B-Y (CCZ) (X)	97	98	B-Y (CCZ) (G)	IN	19-4
19-1	IN	CF/C (CCZ) (X)	99	100	CF/C (CCZ) (G)	IN	19-2

DC-DC CONVERTER

MB-833 BOARD SIDE

CN13

	UNREG GND	1	2	UNREG GND
	SWD EXT DC	3	4	SWD EXT DC
	REG GND	5	6	REG GND
	REG +3.4V	7	8	REG +3.4V
	REG +3.1V	9	10	REG +3.1V
	REG GND	11	12	REG GND
	REG -5.0V	13	14	REG -5.0V
	REG +5.0V	15	16	REG +5.0V
	REG +5.3V	17	18	REG +5.3V
	REG +6.6V	19	20	REG +6.6V
	REG +9.0V	21	22	REG +9.0V
	M GND	23	24	M GND
	M +6V	25	26	M +6V
	N.C	27	28	REG -10.5V
	REG +16.1V	29	30	REG +48.0V

CP-373/315

CP-373 BOARD SIDE (CN1) — CP-315 BOARD SIDE (CN1) — MB-833 BOARD SIDE — CP-315 BOARD SIDE (CN1) — CP-373 BOARD SIDE (CN1)

CN19

1	1B	8-99	OUT	CF/C (CCZ) (X)	1	2	CF/C (CCZ) (G)	OUT	8-100	1A	2
3	2B	8-97	OUT	B-Y (CCZ) (X)	3	4	B-Y (CCZ) (G)	OUT	8-98	2A	4
5	3B	8-95	OUT	R-Y (CCZ) (X)	5	6	R-Y (CCZ) (G)	OUT	8-96	3A	6
7	4B	8-93	OUT	Y (CCZ) (X)	7	8	Y (CCZ) (G)	OUT	8-94	4A	8
9	5B	8-91	IN	RET (CCZ) (X)	9	10	RET (CCZ) (G)	IN	8-92	5A	10
11	6B	8-89	OUT	VBS/Y (CCZ) (X)	11	12	VBS/Y (CCZ) (G)	OUT	8-90	6A	12
13	7B	8-87. 20-9		CCZ DC	13	14	CCZ DC GND		8-88	7A	14
15	8B	20-10	IN	REC ALARM	15	16	EXT VTR TRG	OUT	16-29	8A	16
17	9B	20-11	IN	CCZ BATT IND	17	18	CCZ MIC (X)	OUT	3-8	9A	18
19	10B	3-9	OUT	CCZ MIC (Y)	19	20	CCZ MIC (G)	OUT	3-10	10A	20
21	11B	3-21	IN	CCZ AUDIO MONI (X)	21	22	CCZ AUDIO MONI (G)	IN	3-20	11A	22
23	12B	3-38	IN	ANTON V	23	24	N.C			12A	24
25	13B	3-40	OUT	ANTON AUTO	25	26	LIGHT CONT	OUT	2-29	13A	26
27	14B	2-30. 20-6	IN	BATTERY ID	27	28	N.C			14A	28
29	15B			N.C	29	30	L:POWER ON (PSW-CP)	OUT	16-30	15A	30
31	16B	8-85	OUT	S-C (X)	31	32	S-C (G)	OUT	8-86	16A	32
33	17B	8-83	OUT	S-Y (X)	33	34	S-Y (G)	OUT	8-84	17A	34
35	18B	8-81	OUT	VBS/MON (X)	35	36	VBS/MON (G)	OUT	8-82	18A	36
37	19B	6-20. 8-77	IN	GENLOCK (X)	37	38	GENLOCK (G)	IN	6-19. 8-78	19A	38
39	20B	2-24		EXT TC (G)	39	40	EXT TC INPUT (X)	IN	2-23	20A	40
41	21B	2-27. 20-7	IN	DC INLET	41	42	EXT TC OUTPUT (X)	OUT	2-25	21A	42
43	22B	3-22	IN	CH-1 MIC/LINE (X)	43	44	N.C			22A	44
45	23B	3-24	IN	CH-1 MIC/LINE (Y)	45	46	CH-1 MIC/LINE (G)	IN	3-23	23A	46
47	24B	3-26	IN	CH-2 MIC/LINE (X)	47	48	CH-2 MIC/LINE (G)	IN	3-27	24A	48
49	25B	3-28	IN	CH-2 MIC/LINE (Y)	49	50	LINE CH-1 (X)	OUT	3-33	25A	50
51	26B	3-34	OUT	LINE CH-1/2 (G)	51	52	LINE CH-2 (X)	OUT	3-35	26A	52
53	27B			REG +48.0V	53	54	AF OUTPUT (Y)	IN	3-36	27A	54
55	28B			REG +5.0V	55	56	AF OUTPUT (X)	IN	3-37	28A	56
57	29B			REG -5.0V	57	58	UNREG GND			29A	58
59	30B			REG GND	59	60	SWD EXT DC			30A	60

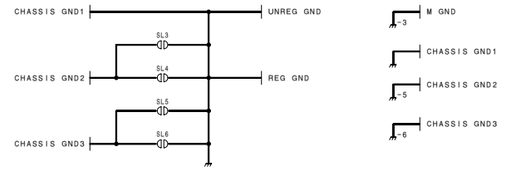

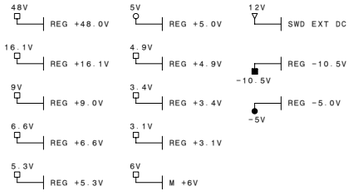

MB-833 (1/2)
BOARD NO. 1-673-965-11, 12
B-DSR500WS-MB833-SM

AA-104

AA-104 BOARD SIDE (CN504) — MB-833 BOARD SIDE (CN14)

50	1	1KHz	OUT	20-41
49	2	PEAKING CONT	IN	20-40
48	3	ZOOM CONT	IN	20-46. 16-5
47	4	REMOTE1	IN	20-38
46	5	LD (VF)	OUT	20-37
45	6	FOCUS CONT	IN	20-51. 16-41
44	7	BATT IND	OUT	20-35
43	8	SDA (S-P) (AT/AA. PSW)	OUT	16-10. 20-34
42	9	REC TALLY	OUT	20-33
41	10	RCK	OUT	1-13. 16-12. 20-32
40	11	SHIFT/LOAD	OUT	1-12. 16-13. 20-31
39	12	SCLK (S/P)	OUT	1-11. 16-14. 20-30
38	13	G	OUT	1-10. 16-15. 20-29
37	14	SDA (P-S) (AA/PSW)	IN	16-16
36	15	VF VIDEO (X)	OUT	8-25
35	16	VF VIDEO (G)	OUT	8-26
34	17	B-Y (VF)	OUT	8-27
33	18	R-Y (VF)	OUT	8-28
32	19	SYNC (VF)	OUT	8-29
31	20	BACK TALLY SW	IN	1-29
30	21	BACK TALLY GND		1-28
29	22	BACK TALLY	OUT	1-27
28	23	EARPHONE (G)	OUT	1-24
27	24	EARPHONE (X)	OUT	1-23
26	25	EARPHONE SW (Y)	IN	1-22
25	26	MIC1 (G)	IN	1-21
24	27	MIC1 (Y)	IN	1-20
23	28	MIC1 (X)	IN	1-19
22	29	CONV LENS	IN	16-39
21	30	SDA (P-S) (FP/AA)	OUT	1-16
20	31	SDA (S-P) (FP/AA)	OUT	1-15
19	32	LIGHT SW	IN	1-14
18	33	REG GND		
17	34	REG GND		
16	35	REG +48.0V		
15	36	REG +48.0V		
14	37	REG -5.0V		
13	38	REG -5.0V		
12	39	REG +9.0V		
11	40	REG +9.0V		
10	41	REG +4.9V		
9	42	REG +4.9V		
8	43	SWD EXT DC		
7	44	SWD EXT DC		
6	45	SWD EXT DC		
5	46	UNREG GND		
4	47	UNREG GND		
3	48	UNREG GND		
2	49	REG GND		
1	50	REG GND		

PSW-71

PSW-71 BOARD SIDE (CN306) — MB-833 BOARD SIDE (CN16)

50	1	RS232C (C/RM)	OUT	20-50
49	2	RS232C (RM/C)	IN	20-49
48	3	S.DATA (RM)	I/O	20-48
47	4	SDA (P-S) (PSW/AT)	IN	20-47
46	5	ZOOM CONT	OUT	20-46. 14-3
45	6	IRIS CONT	OUT	20-45
44	7	AUTO/MANU	OUT	20-44
43	8	IRIS POSI	IN	20-43
42	9	VJ CONNECT	IN	20-8
41	10	SDA (S-P) (AT/AA. PSW)	OUT	14-8. 20-34
40	11	REC TALLY 2	OUT	20-36
39	12	RCK	OUT	1-13. 14-10. 20-32
38	13	SHIFT/LOAD	OUT	1-12. 14-11. 20-31
37	14	SCLK (S/P)	OUT	1-11. 14-12. 20-30
36	15	G	OUT	1-10. 14-13. 20-29
35	16	SDA (P-S) (AA/PSW)	OUT	14-14
34	17	REG -5.0V		
33	18	REG +9.0V		
32	19	REG +4.9V		
31	20	REG +4.9V		
30	21	SWD EXT DC		
29	22	SWD EXT DC		
28	23	SWD EXT DC		
27	24	UNREG GND		
26	25	UNREG GND		
25	26	UNREG GND		
24	27	REG GND		
23	28	REG GND		
22	29	EXT VTR TRG	IN	19-16
21	30	L:POWER ON (PSW-CP)	IN	19-30
20	31	L:POWER ON (FP-PSW)	OUT	2-28
19	32	H:MAIN SW ON	IN	2-26
18	33	SDA (C/LENS)	OUT	20-52
17	34	SDA (LENS/C)	IN	20-53
16	35	VBS (RM) (G)	OUT	8-24
15	36	VBS (RM) (X)	OUT	8-23
14	37	VBS (BNC) (G)	OUT	8-22
13	38	VBS (BNC) (X)	OUT	8-21
12	39	CONV LENS	OUT	14-29
11	40	CAL	IN	6-24
10	41	FOCUS CONT	OUT	20-51. 14-6
9	42	FOCUS POSI		N.C
8	43	ZOOM POSI		N.C
7	44	EXTEND ON/OFF		N.C
6	45	SDA (S-P) (PSW/FP)	IN	1-9
5	46	VTR TRIG	IN	1-8
4	47	AUDIO VOLUME	IN	1-7
3	48	VJ MIC (X)	IN	1-6
2	49	VJ MIC (G)	IN	1-5
1	50	DPR	IN	5-22. 6-61

AT-150B/127

AT-127 BOARD SIDE (CN501) — MB-833 BOARD SIDE (CN20)

		REG GND N.C	1	2	REG GND N.C		
		REG GND N.C	3	4	REG GND N.C		
		REG GND N.C	5	6	BATTERY ID	OUT	2-30. 19-27
19-41. 2-27	OUT	DC INLET	7	8	VJ CONNECT	OUT	16-9
19-13. 8-87	OUT	CCZ DC	9	10	REC ALARM	OUT	19-15
19-17	OUT	CCZ BATT IND	11	12	BATT ALARM	OUT	1-35
1-34	OUT	SCLK VTR	13	14	SDA (V/C)	OUT	1-33
1-32	IN	SDA (C/V)	15	16	CS VTR	OUT	1-31
1-30	OUT	INT VTR TALLY	17	18	SDA (EEPROM)	I/O	15-45. 6-59. 8-41
15-44. 6-60. 8-42	IN	SCL (EEPROM)	19	20	SDA (D/A)	IN	15-43. 6-57. 8-43. 5-17
15-42. 6-58. 8-44. 5-18	IN	SCL (D/A)	21	22	LD (TG)	IN	15-41
15-40	IN	LD (SHUT)	23	24	SDA (SHUT)	IN	15-39
15-38	IN	SCL (SHUT)	25	26	TEMP DATA	OUT	15-37
5-19	IN	LD (VA2)	27	28	LD (VA1)	IN	5-20
14-13. 16-15. 1-10	IN	G	29	30	SCLK (S/P)	IN	14-12. 16-14. 1-11
14-11. 16-13. 1-12	IN	SHIFT/LOAD	31	32	RCK	IN	14-10. 16-12. 1-13
14-9	IN	REC TALLY	33	34	SDA (S-P) (AT/AA. PSW)	IN	14-8. 16-10
14-7	OUT	BATT IND	35	36	REC TALLY 2	IN	16-11
14-5	IN	LD (VF)	37	38	REMOTE1	OUT	14-4
15-36	OUT	SCL (DEF)	39	40	PEAKING CONT	OUT	14-2
14-1	IN	1KHz	41	42	WIDE DET	OUT	8-30
16-8	OUT	IRIS POSI	43	44	AUTO/MANU	IN	16-7
16-6	IN	IRIS CONT	45	46	ZOOM CONT	IN	16-5. 14-3
16-4	IN	SDA (P-S) (PSW/AT)	47	48	S.DATA (RM)	I/O	16-3
16-2	OUT	RS232C (RM/C)	49	50	RS232C (C/RM)	IN	16-1
16-41. 14-6	IN	FOCUS CONT	51	52	SDA (C/LENS)	IN	16-33
16-34	OUT	SDA (LENS/C)	53	54	16:9/4:3	IN	6-56
6-29	OUT	L:YC CONNECT	55	56	VD	OUT	8-50. 6-52
8-49. 6-51	OUT	HD	57	58	GENLOCK INT/EXT	OUT	8-40
8-39	OUT	NTSC/PAL	59	60	VF CHR	IN	8-38
8-37	IN	VF CHR BACK	61	62	LD (ES3)	IN	8-36
8-35	IN	LD (ES4)	63	64	LD (ES1)	IN	8-34
8-33	IN	LD (ES2)	65	66	N.C		
5-13	IN	VA ENABLE	67	68	+18DB ON/OFF	IN	5-21. 6-55
6-5. 5-16	IN	LSI RESET	69	70	LD (DPR)	IN	6-6
6-7	IN	LD (PP)	71	72	LD (PR)	IN	6-8
6-9	IN	LD (RC)	73	74	SCL (DSP)	IN	6-10
6-11	I/O	SDA3 (DSP)	75	76	SDA2 (DSP)	I/O	6-12
6-13	I/O	SDA1 (DSP)	77	78	SDA0 (DSP)	I/O	6-14
6-15	IN	TITLE	79	80	TITLE BACK	IN	6-16
N.C		TEST1	81	82	TEST2		N.C
		SWD EXT DC	83	84	SWD EXT DC		
		UNREG GND	85	86	UNREG GND		
		REG GND NC	87	88	NC		
		REG +4.9V	89	90	REG +4.9V		
		REG +9.0V	91	92	REG +9.0V		
		REG +5.3V	93	94	REG +5.3V		
		REG +3.1V	95	96	REG +3.1V		
		REG -5.0V	97	98	REG -5.0V		
		REG GND	99	100	REG GND		

CP-373/315

CN22

1	UNREG GND	13-1. 13-2
2	SWD EXT DC	13-3. 13-4. 21-28. 21-29. 19-60
		2-45. 2-46. 2-47
		14-43. 14-44. 14-45
		16-21. 16-22. 16-23

BACKUP

CN1 — CN23

M+6V BACK UP	1	1 M +6V BACKUP	10-15
M GND	2	2 M GND	

C3 2200 10V, C2 2200 10V, C1 2200 10V

DU-36

MB-833

TG-204

TG-204 BOARD SIDE (CN1) — MB-833 BOARD SIDE (CN15)

45	1	REG +48.0V		
44	2	REG +48.0V		
43	3	REG +6.6V		
42	4	REG +6.6V		
41	5	REG +6.6V		
40	6	REG GND		
39	7	REG GND		
38	8	REG GND		
37	9	REG GND		
36	10	REG GND		
35	11	REG -10.5V		
34	12	REG -10.5V		
33	13	REG -5.0V		
32	14	REG -5.0V		
31	15	REG +5.3V		
30	16	REG +5.3V		
29	17	REG +5.3V		
28	18	REG +5.3V		
27	19	REG +9.0V		
26	20	REG +9.0V		
25	21	REG +16.1V		
24	22	REG +16.1V		
23	23	VCO CTL	OUT	8-31
22	24	CLP1	IN	5-11. 6-70
21	25	FLD	OUT	8-32
20	26	DOUBLE PIX	IN	N.C
19	27	P BLKG	OUT	5-12. 6-69
18	28	18MHz (X)	IN	6-68
17	29	18MHz (G)	IN	6-67
16	30	REG GND		
15	31	36MHz (X)	IN	6-66
14	32	36MHz (G)	IN	6-65
13	33	AVD	OUT	6-64. 5-14
12	34	AHD	OUT	6-63. 5-15
11	35	HTSG	OUT	6-62
10	36	SCL (DEF)	OUT	20-39
9	37	TEMP DATA	IN	20-26
8	38	SCL (SHUT)	OUT	20-25
7	39	SDA (SHUT)	OUT	20-24
6	40	LD (SHUT)	OUT	20-23
5	41	LD (TG)	OUT	20-22
4	42	SCL (D/A)	OUT	20-21. 6-58. 8-44. 5-18
3	43	SDA (D/A)	OUT	20-20. 6-57. 8-43. 5-17
2	44	SCL (EEPROM)	OUT	20-19. 6-60. 8-42
1	45	SDA (EEPROM)	I/O	20-18. 6-59. 8-41

MB-833 (2/2)
BOARD NO. 1-673-965-11, 12

DU-36
BOARD NO. 1-673-954-11
B-DSR500WS-MB833-SM

Section 5
Board Layouts

Index

Board	Page	Remarks
AA-104	5-2	
AT-127	5-4	DSR-500WS/500WSP
AT-150	5-3	DSR-570WS/570WSP
CC-68	5-5	
CN-1519	5-7	DSR-500WS/500WSP
CN-1823	5-5	
CN-1864	5-5	
CN-1865	5-6	
CN-1866	5-6	
CN-1867	5-6	
CN-1873	5-6	
CN-1874	5-6	
CN-2277	5-5	DSR-570WS/570WSP
CP-315	5-9	DSR-500WS/500WSP
CP-373	5-8	DSR-570WS/570WSP
DPR-141	5-10	
DU-36	5-7	
DV-21	5-7	
ES-26	5-12	
FP-118	5-14	
FP-99	5-17	
GCN-16	5-17	
HN-227	5-21	
KY-405	5-20	
LE-221	5-20	
MB-833	5-23	
MT-114	5-21	
PA-219	5-18	DSR-500WS/500WSP
PA-220	5-18	DSR-500WS/500WSP
PA-221	5-18	DSR-500WS/500WSP
PA-254	5-18	
PA-255	5-18	
PA-256	5-18	
PS-570	5-22	
PSW-71	5-22	
RP-91	5-20	
SE-295	5-21	
SE-297	5-21	
SE-511	5-22	
SV-213	5-24	

Board	Page	Remarks
SW-18	5-26	
SW-19	5-26	
SW-929	5-26	
TG-204	5-27	
VA-190	5-28	
VE-44	5-26	

5-1

AA-104 -A SIDE-

SUFFIX: -13

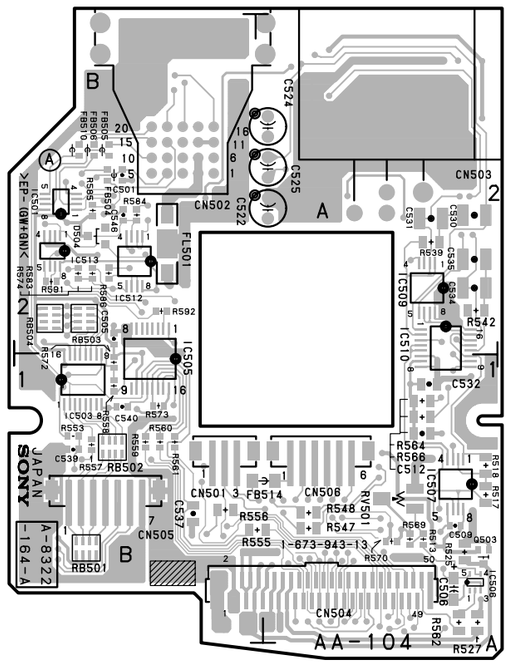

AA-104 -B SIDE-

SUFFIX: -13

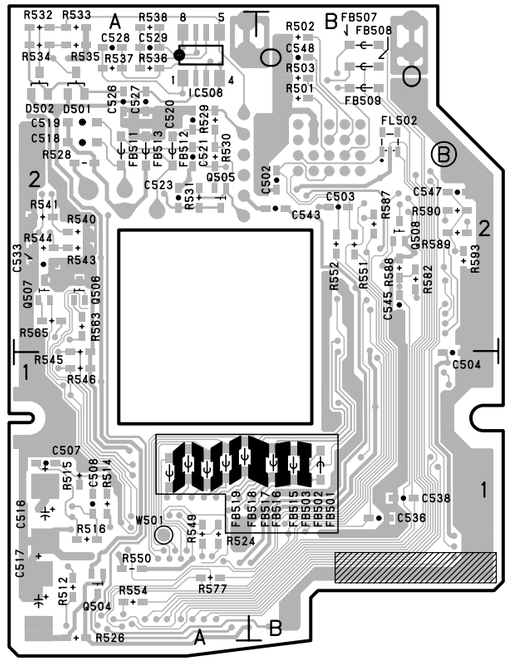

AA-104(1-673-943-13)

C501	B2	C547	＊A2	IC503	B1	R535	＊A2	R589	＊A2		
C502	＊A2			IC505	B1	R536	＊A2	R590	＊A2		
C503	＊A2	CN501	B1	IC506	A1	R537	＊A2	R591	B2		
C504	＊A1	CN502	B2	IC507	A1	R538	＊A2	R592	B2		
C505	B2	CN503	A2	IC508	＊A2	R539	A2	R593	＊A2		
C506	A1	CN504	A1	IC509	A2	R540	＊A2				
C507	＊A1	CN505	B1	IC510	A2	R541	＊A2	RB501	B1		
C508	＊A1	CN506	A1	IC512	B2	R542	A2	RB502	B1		
C509	A1			IC513	B2	R544	＊A2	RB503	B2		
C512	A1	D501	＊A2			R547	A1	RB504	B2		
C516	＊A1	D502	＊A2	Q503	A1	R548	A1				
C517	＊A1	D504	B2	Q504	＊A1	R549	＊A1	RV501	A1		
C518	＊A2			Q505	＊A2	R550	＊A1				
C519	＊A2	FB501	＊A1	Q506	＊A2	R551	＊A2	＊: B SIDE			
C520	＊A2	FB502	＊A1	Q507	＊A2	R552	＊A2				
C521	＊A2	FB503	＊A1			R553	B1				
C522	A2	FB504	B2	R501	＊A2	R554	＊A1				
C523	＊A2	FB505	B2	R502	＊A2	R555	B1				
C524	A2	FB506	B2	R503	＊A2	R556	B1				
C525	A2	FB507	＊A2	R504	＊A2	R557	B1				
C526	＊A2	FB508	＊A2	R512	＊A1	R558	B1				
C527	＊A2	FB509	＊A2	R513	A1	R559	B1				
C528	＊A2	FB510	B2	R514	＊A1	R560	B1				
C529	＊A2	FB511	＊A2	R515	＊A1	R561	B1				
C530	A2	FB512	＊A2	R516	＊A1	R562	A1				
C531	A2	FB513	＊A2	R517	A1	R563	＊A2				
C532	A1	FB514	A1	R518	A1	R564	A1				
C533	＊A2	FB515	＊A1	R524	＊A1	R565	＊A2				
C534	A2	FB516	＊A1	R525	A1	R566	A1				
C535	A2	FB517	＊A1	R526	＊A1	R572	B1				
C536	＊A1	FB518	＊A1	R527	A1	R573	B1				
C537	B1	FB519	＊A1	R528	＊A2	R582	＊B2				
C538	＊A1			R529	＊A2	R583	B2				
C540	B1	FL501	B2	R530	＊A2	R584	B2				
C543	＊A2	FL502	＊A2	R531	＊A2	R585	B2				
C545	＊A2			R533	＊A2	R586	B2				
C546	B2	IC501	B2	R534	＊A2	R587	＊A2				

AA-104 -A SIDE-

SUFFIX: -12

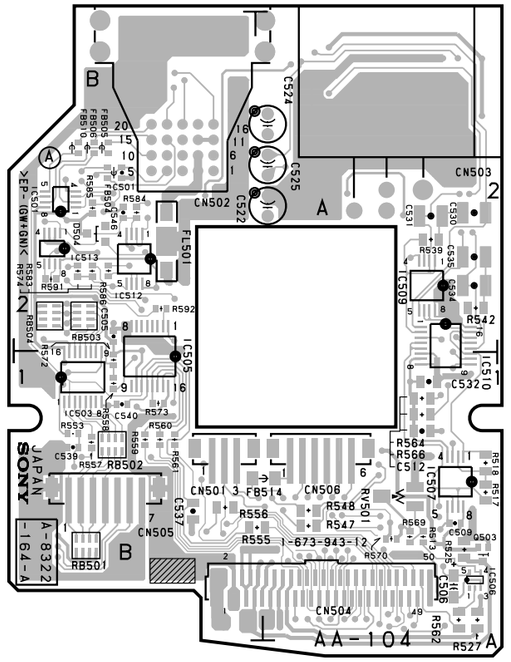

AA-104 -B SIDE-

SUFFIX: -12

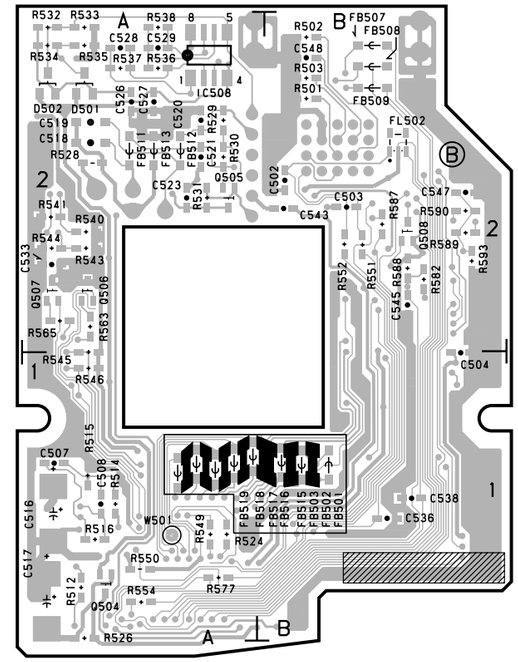

AA-104(1-673-943-12)

C501	B2	C546	B2	IC501	B2	R533	＊A2	R573	B1		
C502	＊B2	C547	＊B2	IC503	B1	R534	＊A2	R574	B2		
C503	＊B2	C548	＊B2	IC505	B1	R535	＊A2	R577	＊A1		
C504	＊B1			IC506	A1	R536	＊A2	R582	＊B2		
C505	B2	CN501	B1	IC507	A1	R537	＊A2	R583	B2		
C506	A1	CN502	B2	IC508	＊A2	R538	＊A2	R584	B2		
C507	＊A1	CN503	A2	IC509	A2	R539	A2	R585	B2		
C508	＊A1	CN504	A1	IC510	A2	R540	＊A2	R586	B2		
C509	A1	CN505	B1	IC512	B2	R541	＊A2	R587	＊B2		
C512	A1	CN506	A1	IC513	B2	R542	A2	R588	＊B2		
C516	＊A1					R543	＊A2	R589	＊B2		
C517	＊A1	D501	＊A2	Q503	A1	R544	＊A2	R590	＊B2		
C518	＊A2	D502	＊A2	Q504	＊A1	R545	＊A2	R591	B2		
C519	＊A2	D504	B2	Q505	＊A2	R546	＊A1	R592	B2		
C520	＊A2			Q506	＊A2	R547	A1	R593	＊B2		
C521	＊A2	FB501	＊B1	Q507	＊A2	R548	A1				
C522	A2	FB502	＊B1	Q508	＊B2	R549	＊A1	RB501	B1		
C523	＊A2	FB503	＊B1			R550	＊A1	RB502	B1		
C524	A2	FB504	B2	R501	＊B2	R551	＊B2	RB503	B2		
C525	A2	FB505	B2	R502	＊B2	R552	＊B2	RB504	B2		
C526	＊A2	FB506	B2	R503	＊B2	R553	B1				
C527	＊A2	FB507	＊B2	R512	＊A1	R554	＊A1	RV501	A1		
C528	＊A2	FB508	＊B2	R513	A1	R555	B1				
C529	＊A2	FB509	＊B2	R514	＊A1	R556	B1	W501	＊A1		
C530	A2	FB510	B2	R515	＊A1	R557	B1				
C531	A2	FB511	＊A2	R516	＊A1	R558	B1				
C532	A1	FB512	＊A2	R517	A1	R559	B1	＊: B SIDE			
C533	＊A2	FB513	＊A2	R518	A1	R560	B1				
C534	A2	FB514	A1	R524	＊A1	R561	B1				
C535	A2	FB515	＊A1	R525	A1	R562	A1				
C536	＊B1	FB516	＊A1	R526	＊A1	R563	＊A2				
C537	B1	FB517	＊A1	R527	A1	R564	A1				
C538	＊B1	FB518	＊A1	R528	＊A2	R565	＊A2				
C539	B1	FB519	＊A1	R529	＊A2	R566	A1				
C540	B1			R530	＊A2	R569	A1				
C543	＊B2	FL501	B2	R531	＊A2	R570	A1				
C545	＊B2	FL502	＊B2	R532	＊A2	R572	B1				

AA-104
SUFFIX: -11

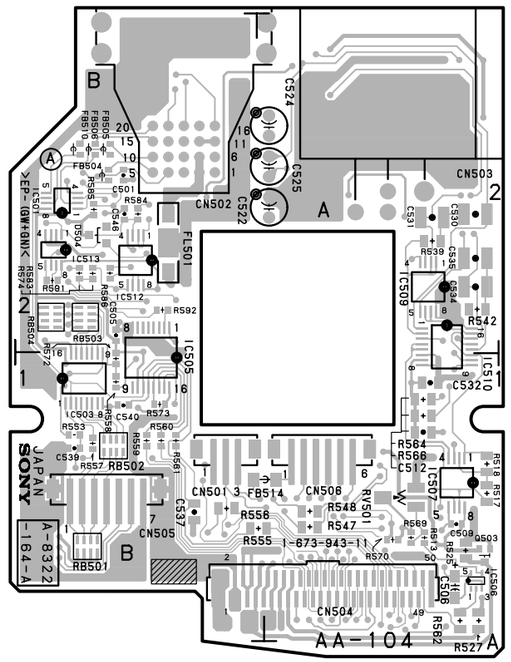

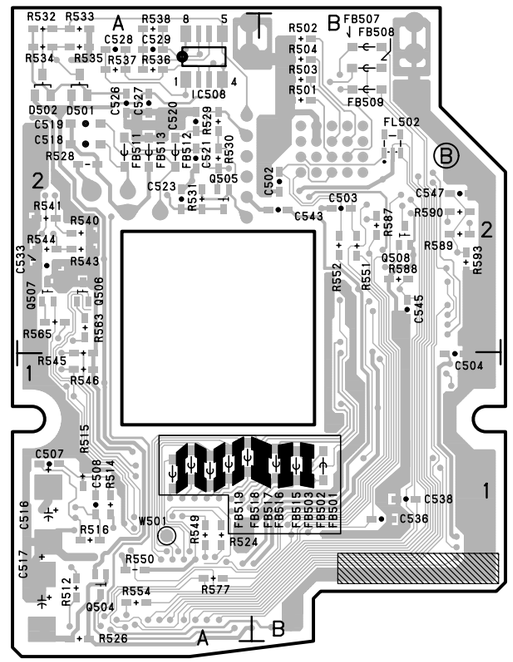

AA-104 -A SIDE-

SUFFIX: -11

AA-104 -B SIDE-

SUFFIX: -11

AA-104(1-673-943-11)

C501	B2	C546	B2	IC501	B2	R532	＊A2	R572	B1
C502	＊A2	C547	＊A2	IC503	B1	R533	＊A2	R573	B1
C503	＊A2			IC505	B1	R534	＊A2	R574	B2
C504	＊A1	CN501	B1	IC506	A1	R535	＊A2	R577	＊A1
C505	B2	CN502	B2	IC507	A1	R536	＊A2	R583	B2
C506	A1	CN503	A2	IC508	＊A2	R537	＊A2	R584	B2
C507	＊A1	CN504	A1	IC509	A2	R538	＊A2	R585	B2
C508	＊A1	CN505	B1	IC510	A2	R539	A2	R586	B2
C509	A1	CN506	A1	IC512	B2	R540	＊A2	R587	＊A2
C512	A1			IC513	B2	R541	＊A2	R588	＊A2
C516	＊A1	D501	＊A2			R542	A2	R589	＊A2
C517	＊A1	D502	＊A2	Q503	A1	R543	＊A2	R590	＊A2
C518	＊A2	D504	B2	Q504	＊A1	R544	＊A2	R591	B2
C519	＊A2			Q505	＊A2	R545	＊A2	R592	B2
C520	＊A2	FB501	＊A1	Q506	＊A2	R546	＊A1	R593	＊A2
C521	＊A2	FB502	＊A1	Q507	＊A2	R547	A1		
C522	A2	FB503	＊A1	Q508	＊A2	R548	A1	RB501	B1
C523	＊A2	FB504	B2			R549	＊A1	RB502	B1
C524	A2	FB505	B2	R501	＊A2	R550	＊A1	RB503	B2
C525	A2	FB506	B2	R502	＊A2	R551	＊A2	RB504	B2
C526	＊A2	FB507	＊A2	R503	＊A2	R552	＊A2		
C527	＊A2	FB508	＊A2	R504	＊A2	R553	B1	RV501	A1
C528	＊A2	FB509	＊A2	R512	＊A1	R554	＊A1		
C529	＊A2	FB510	B2	R513	A1	R555	B1	W501	＊A1
C530	A2	FB511	＊A2	R514	＊A1	R556	B1		
C531	A2	FB512	＊A2	R515	＊A1	R557	B1	＊: B SIDE	
C532	A1	FB513	＊A2	R516	＊A1	R558	B1		
C533	＊A2	FB514	A1	R517	A1	R559	B1		
C534	A2	FB515	＊A1	R518	A1	R560	B1		
C535	A2	FB516	＊A1	R524	＊A1	R561	B1		
C536	＊A1	FB517	＊A1	R525	A1	R562	A1		
C537	B1	FB518	＊A1	R526	＊A1	R563	＊A2		
C538	＊A1	FB519	＊A1	R527	A1	R564	A1		
C539	B1			R528	＊A2	R565	＊A2		
C540	B1	FL501	B2	R529	＊A2	R566	A1		
C543	＊A2	FL502	＊A2	R530	＊A2	R569	A1		
C545	＊A2			R531	＊A2	R570	A1		

5-2 (a)

AT-150(1-683-381-12)

C501	C4	C740	*A1	IC507	*C4	L513	C3
C502	*B4	C741	*A1	IC508	A3	L701	C2
C503	*C4	C742	*A3	IC509	*C3	L702	*A2
C504	C4	C743	*A4	IC510	C3	L704	*B2
C505	C4	C744	*A4	IC511	*C2	L706	*A2
C506	*C4	C745	*A1	IC512	B3	L707	*A4
C507	*C4	C746	A4	IC513	B4		
C508	*C4	C747	B4	IC514	*C3	Q501	*B4
C509	B4	C748	B3	IC515	C3	Q502	C4
C510	B4			IC516	*C3	Q503	C4
C511	*B3	CN501	B4	IC517	*C3	Q504	*A3
C512	B4	CN503	*C4	IC518	*A4	Q505	*C3
C513	C4			IC519	A4	Q506	*C4
C514	*C4	CV501	C3	IC520	*A4	Q508	*C4
C515	C4	CV502	C3	IC521	C4	Q509	*C4
C516	*A3	CV701	A1	IC522	C4	Q510	C3
C517	*C3			IC525	B3	Q511	C3
C518	*C3	D501	C4	IC526	*C3	Q512	*C4
C519	*C3	D502	B3	IC527	*C3	Q513	*B4
C520	*C3	D503	*C3	IC528	C4	Q517	*C3
C521	*C3	D504	*C3	IC529	*C4	Q701	*A3
C522	B3	D505	A4	IC530	B4		
C523	*B2	D506	*A4	IC531	C3	R501	C4
C524	*C3	D507	A4	IC550	*B4	R502	*C4
C525	*C3	D508	*C4	IC551	*B4	R503	*C4
C526	*C3	D509	*C4	IC701	*C2	R504	*C4
C527	C3	D511	*B4	IC702	*C2	R505	*C4
C528	*C4	D512	*C4	IC703	B2	R506	*C4
C529	*A4	D702	*A1	IC708	A2	R507	C3
C530	*A3	D703	*A1	IC709	*A1	R508	B3
C531	A4	D704	*A2	IC710	A1	R509	*B3
C532	*A4	D705	*B3	IC711	*B2	R510	C4
C533	A4			IC712	B2	R511	B4
C534	*A4	E1	A3	IC718	*A1	R512	C4
C536	*A4			IC719	*A1	R513	C4
C537	*A4	IC501	C4	IC720	*A3	R514	C4
C538	*A3	IC502	*C4	IC721	*A4	R515	C4
C539	*A3	IC504	*B3	IC722	*A1	R516	C4
C540	C3	IC506	B3	IC723	*A2	R517	C4
C541	*C4	IC507	*C4	IC724	B2	R518	C4
C542	*C3	IC508	A3			R519	C4
C543	C3	IC509	*C3	L501	B4	R520	*B3
C544	*C4	IC510	C3	L502	*B4	R521	*A3
C545	C4	IC511	*C2	L503	B4	R522	*A3
C546	C4	IC512	B3	L504	*C4	R524	A3
C547	*C3	IC513	B4	L505	*A3	R525	A3
C548	*A4	IC514	*C3	L506	C3	R526	*A3
C549	*A4	IC515	C3	L507	*C3	R527	*A3
C550	*C3	IC516	C3	L508	*C3	R528	*C3
C551	C3	IC517	*C3	L509	*A4	R529	*C3
C552	*C3	IC518	*A4	L510	C3	R530	*C3
C553	*C3	IC519	A4	L511	C4	R531	B3
C554	*C3	IC520	*A4	L512	C4	R532	C3
C555	C4	IC521	C4			R533	*B3
C556	*C4	IC522	C4			R534	*B3
C557	C4	IC524	C4			R535	C3
C558	*B4	IC525	B3			R536	B4
C559	B3	IC526	*C3			R537	*B3
C560	*B3	IC527	*C3			R538	*C3
C576	C3	IC528	C4			R539	*C3
C577	C3	IC529	*C4			R540	*C3
C578	*A4	IC530	B4			R541	*C3
C579	*B4	IC531	C3			R542	*C3
C580	*A4	IC550	*B4			R543	*A4
C701	C2	IC551	*B4			R544	*A4
C702	C2	IC701	*C2			R545	*A4
C703	*B2	IC702	*C2			R546	*A4
C704	*A2	IC703	B2			R547	A4
C705	A2	IC708	A2			R548	*A4
C706	A3	IC709	*A1			R549	A4
C707	*B3	IC710	A1			R550	*A4
C710	*A2	IC711	*B2			R551	*A4
C711	*A2	IC712	B2			R552	*A4
C712	*A1	IC718	*A1			R553	*A4
C713	*A1	IC719	*A1			R554	A4
C714	*A2	IC720	*A3			R555	*A3
C715	*A2	IC721	*A4			R556	A3
C716	A1	IC722	*A1			R557	*C3
C717	A1	IC723	*A2			R558	*C4
C718	A1	IC724	B2			R559	*C3
C720	B2					R560	*C3
C721	B2	L501	B4			R561	*C3
C729	*A2	L502	*B4			R562	*C3
C730	*A2	L503	B4			R563	*C4
C731	*A2	L504	*C4			R564	*C4
C732	*A2	L505	*A3			R565	C4
C733	*A2	L506	C3			R566	C4
C734	*A2	L507	*C3			R567	C4
C735	*A2	L508	*C3			R568	C4
C736	*A3	L509	*A4			R569	*C4
C737	*B2	L510	C3			R570	*C4
C738	*B2	L511	C4			R571	*C4
C739	*B2	L512	C4			R572	*C4
						R573	C4
						R574	*C3
						R575	*C3
						R576	*C3
						R577	*C4
						R578	*C4
						R579	*C4
						R580	*C4
						R581	A4
						R582	*B2
						R583	*C3
						R585	C3
						R586	C3
						R587	C3
						R588	C3
						R589	*A3
						R590	*B4
						R591	C3
						R592	*C4
						R593	*C4
						R594	C4
						R595	*A3
						R596	C4
						R597	A4
						R598	*C3
						R599	C3
						R600	C4
						R601	C4
						R602	C4
						R603	C4
						R604	*B4
						R605	C4
						R606	C4
						R607	*B4
						R608	*B4
						R609	*C4
						R610	*B4
						R611	*B4
						R612	*B4
						R613	C4
						R614	*B4
						R615	C4
						R616	B4
						R617	*A2
						R618	*A2
						R619	*A2
						R620	*A3
						R621	A3
						R622	B4
						R623	A3
						R624	*B4
						R625	*A4
						R626	*B4
						R627	*C4
						R628	*A4
						R629	*C4
						R630	*C4
						R651	A3
						R652	*B4
						R653	*B4
						R654	*B4
						R655	*B4
						R656	*A4
						R701	*B3
						R702	*A3
						R703	*A3
						R704	*A2
						R705	*A2
						R706	*A2
						R707	*A2
						R708	B2
						R709	A1
						R710	B2
						R711	*A2
						R712	*A2
						R713	*A1
						R714	*A1
						R715	*A1
						R716	*A1
						R717	B1
						R718	*A2
						R719	*A2
						R720	*A2
						R721	*A2
						R722	*A2
						R723	*A2
						R724	*A2
						R725	*A2
						R726	B1
						R727	A1
						R728	A1
						R729	*B2
						R732	*B2
						R733	*B2
						R734	*A1
						R737	*A2
						R738	*A2
						R739	*A3
						R740	*A3
						R741	*A3
						R742	*A3
						R743	*A2
						R749	*A2
						R750	*A2
						R751	*B2
						R752	*B2
						R753	*B2
						R754	*A3
						R755	*B3
						R756	*B3
						R757	*A3
						R758	*A4
						R759	*B4
						R760	B3
						R761	B4
						R762	*B1
						R763	*A3
						R764	*A1
						R765	A1
						RB501	*C4
						RB502	B3
						RB503	*B3
						RB504	B3
						RB505	B3
						RB506	B3
						RB507	*C3
						RB508	*B3
						RB509	*A4
						RB510	*B4
						RB701	*C2
						RB702	*C2
						RB703	*B2
						RB704	B2
						RB705	*B2
						RB706	*A2
						RB707	*B2
						RB708	*A2
						X701	A4
						X702	A1

*: B SIDE

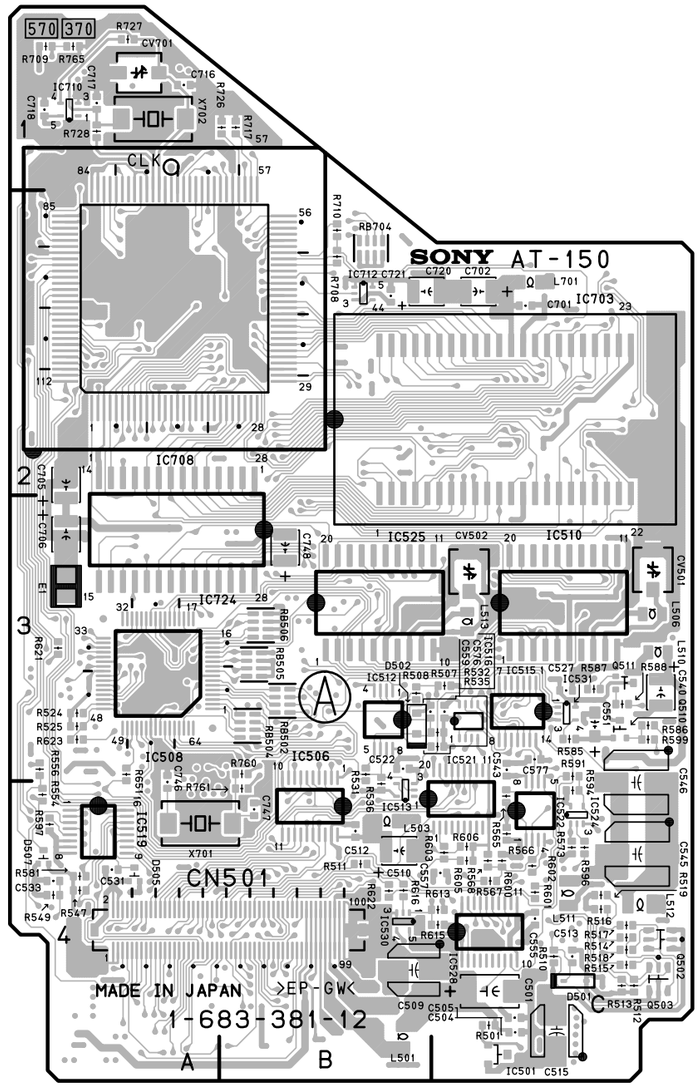

AT-150 -A SIDE-

SUFFIX: -12
FOR DSR-570WS/570WSP

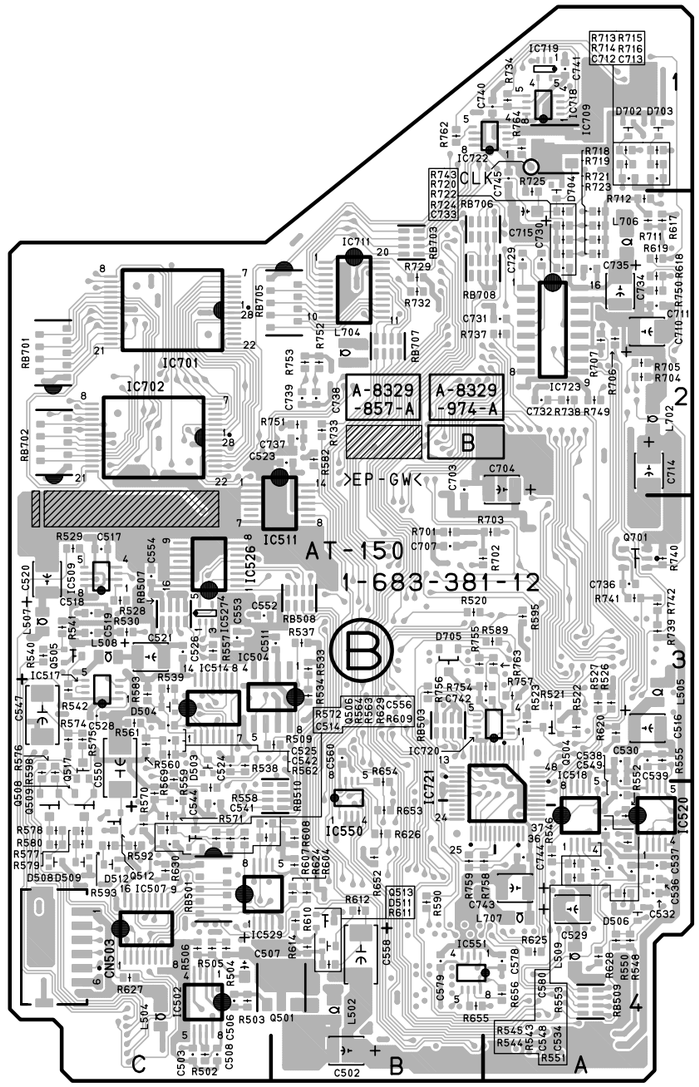

AT-150 -B SIDE-

SUFFIX: -12
FOR DSR-570WS/570WSP

AT-127(1-673-962-11)

C501	C4	C745	*B1	Q502	C4	R581	A4
C502	*B4	C746	A3	Q503	C4	R582	*C2
C503	*C4	C747	B3	Q504	*A3	R583	*C3
C504	C4			Q505	*C3	R585	C3
C505	C4	CN501	B4	Q506	*C3	R586	C3
C506	*C4	CN503	*C4	Q507	*C3	R587	C3
C507	*C4			Q508	*C3	R588	*C3
C508	*C4	CV501	C2	Q509	*C3	R589	*B3
C509	C4	CV502	C2	Q510	C3	R590	*B4
C510	B3	CV701	A1	Q511	C3	R591	C3
C511	*C3			Q512	*C3	R592	*C4
C512	B3	D501	C4	Q513	*B4	R593	*C4
C513	C4	D502	C3	Q701	*A2	R594	C3
C514	*C4	D503	*C3			R595	*B3
C515	C4	D504	*C3	R501	C4	R596	C4
C516	*A3	D505	A4	R502	*C4	R597	A3
C517	*C2	D506	*A4	R503	*C4	R598	*C3
C518	*C3	D507	A4	R504	*C4	R599	C3
C519	*C3	D508	*C4	R505	*C4	R600	C4
C520	*C3	D509	*C4	R506	*C4	R601	C4
C521	*C3	D510	*C4	R507	C3	R602	C4
C522	C3	D511	*B4	R508	C3	R603	*C4
C523	*C2	D701	*A2	R509	*C3	R604	*C4
C524	*C3	D702	*A1	R510	C4	R605	C4
C525	*C3	D703	*A1	R511	B4	R606	C4
C526	C3	D704	*A1	R512	C4	R607	*C4
C527	C3	D705	*B3	R513	C4	R608	*C4
C528	*C3			R514	C4	R609	*C4
C529	*A4	IC501	C4	R515	C4	R610	*C4
C530	*A3	IC502	*C4	R516	C4	R611	*B4
C531	A4	IC504	*C3	R517	C4	R612	*B4
C532	*A4	IC506	B3	R518	C4	R613	C4
C533	A4	IC507	*C4	R519	C4	R614	*C4
C534	*A4	IC508	A3	R520	B3	R615	C4
C536	*A4	IC509	*C3	R521	*A3	R616	C4
C537	*A4	IC510	C3	R522	*A3	R617	*A2
C538	*A3	IC511	*C2	R523	*A3	R618	*A2
C539	*A3	IC512	C3	R524	A3	R619	*A2
C540	C3	IC513	C3	R525	A3	R620	*A3
C541	*C3	IC514	*C3	R526	*A3	R621	A3
C542	*C3	IC515	C3	R527	*A3	R622	*C4
C543	C3	IC516	C3	R528	*C3	R623	A3
C544	*C3	IC517	*C3	R529	*C2	R624	*B4
C545	C4	IC518	*A3	R530	*C3	R625	*B4
C546	C3	IC519	A3	R531	B3	R626	*B4
C547	*C3	IC520	*A3	R532	C3	R627	*C4
C548	*A4	IC521	C3	R533	*C3	R628	*A4
C549	*A3	IC522	C3	R534	*C3	R629	*C3
C550	*C3	IC524	C3	R535	C3	R630	*C4
C551	C3	IC525	B3	R536	C3	R701	*C2
C552	*C3	IC526	*C2	R537	*C3	R702	B2
C553	*C3	IC527	*C3	R538	*C3	R703	B2
C554	*C3	IC528	C4	R539	*C3	R704	*A2
C555	C4	IC529	*C4	R540	*C3	R705	*A2
C556	*C3	IC530	C4	R541	*C3	R706	*A2
C557	C4	IC701	*C2	R542	*C3	R707	*A2
C558	*B4	IC702	*C2	R543	*A4	R708	B2
C559	B3	IC703	C2	R544	*A4	R709	*A2
C701	C2	IC704	*B2	R545	*A4	R710	B1
C702	C2	IC705	A2	R546	*A4	R711	*A1
C703	*A2	IC708	A2	R547	A4	R712	*A1
C704	*A2	IC709	*A1	R548	*A4	R713	*A1
C705	A2	IC710	A1	R549	A4	R714	*A1
C706	A2	IC711	*B2	R550	*A4	R715	*A1
C707	*B2	IC712	B2	R551	*A4	R716	*A1
C710	*A2	IC717	*A2	R552	*A3	R717	B1
C711	*A2	IC718	*A1	R553	*A4	R718	*A1
C712	*A1	IC719	*A1	R554	A3	R719	*A1
C713	*A1	IC720	*B3	R555	*A3	R720	*A1
C714	*A2	IC721	*B3	R556	A3	R721	*A2
C715	*A1	IC722	*B1	R558	*C3	R722	*A2
C716	B1			R559	*C3	R723	*A2
C717	A1	L501	C4	R560	*C3	R724	*A2
C718	A1	L502	*B4	R561	*C3	R725	*A1
C719	C2	L503	C4	R562	*C3	R726	B1
C720	C2	L504	*C4	R563	*C4	R727	A1
C721	B2	L505	*A3	R564	*C3	R728	A1
C729	*A2	L506	C3	R565	C3	R729	*B2
C730	*A2	L507	*C3	R566	C3	R730	*B2
C731	*B2	L508	*C3	R567	C4	R731	*B2
C732	*A2	L509	*A4	R568	C4	R732	B2
C733	*A2	L510	C3	R569	*C3	R733	*B2
C734	*A2	L511	C4	R570	*C3	R737	*B2
C735	*A2	L512	C4	R571	*C3	R738	*A2
C736	*A3	L513	C3	R572	*C3	R739	*A3
C737	*C2	L701	C2	R573	C3	R740	*A2
C738	*C2	L702	*A2	R574	*C3	R741	*A3
C739	*C2	L703	C2	R575	*C3	R742	*A3
C740	*B1	L704	*B2	R576	*C3	R743	*A1
C741	*A1	L706	*A1	R577	*C3	R749	*A2
C742	*B3	L707	*A4	R578	*C3	R750	*A2
C743	*B4			R579	*C4	R751	*C2
C744	*A4	Q501	*C4	R580	*C4	R752	*B2

R753	*C2	RB501	*C4
R754	*B3	RB502	B3
R755	*B3	RB503	A3
R756	*B3	RB504	B3
R757	*B3	RB505	B3
R758	*B4	RB506	*B3
R759	*B4	RB507	*C3
R760	B3	RB508	*C3
R761	B3	RB509	*A4
R762	A3	RB510	*C3
R763	*B3	RB701	*C2
R764	*A1	RB702	*C2
		RB703	*B1
RB501	*C4	RB704	B1
RB502	B3	RB705	*C2
RB503	A3	RB706	*B1
RB504	B3	RB707	*B2
RB505	B3	RB708	*B2
RB506	*B3		
RB507	*C3	S701	A1
RB508	*C3		
RB509	*A4	X701	B3
RB510	*C3	X702	A1
RB701	*C2		
RB702	*C2	*: B SIDE	
RB703	*B1		
RB704	B1		
RB705	*C2		
RB706	*B1		
RB707	*B2		
RB708	*B2		

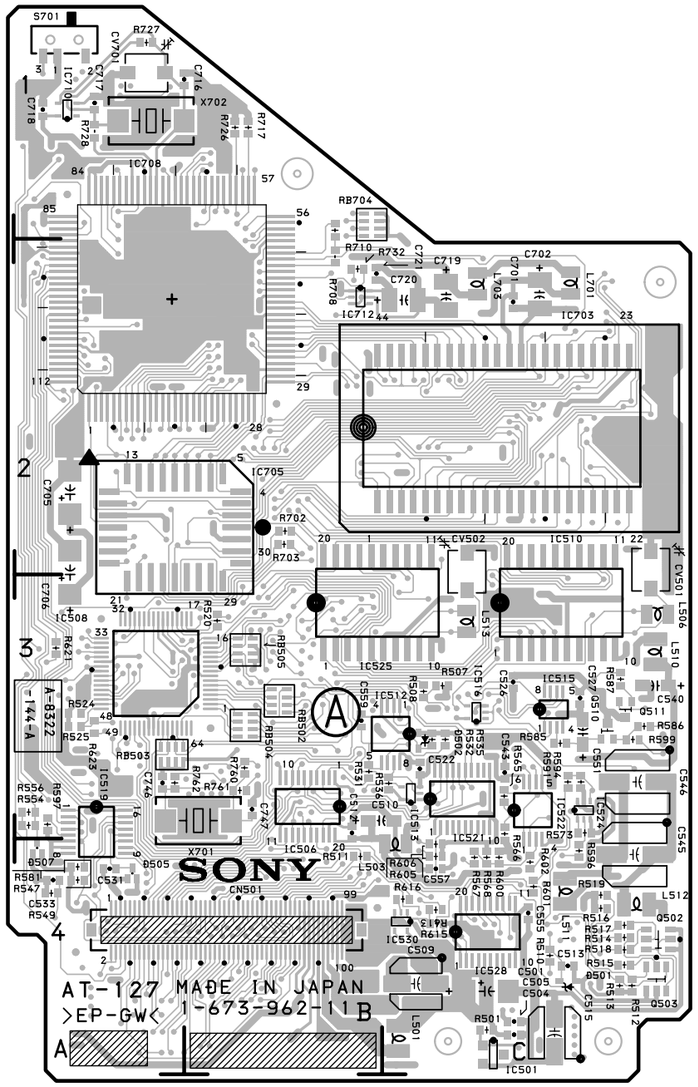

AT-127 -A SIDE-
SUFFIX: -11
FOR DSR-500WS/500WSP

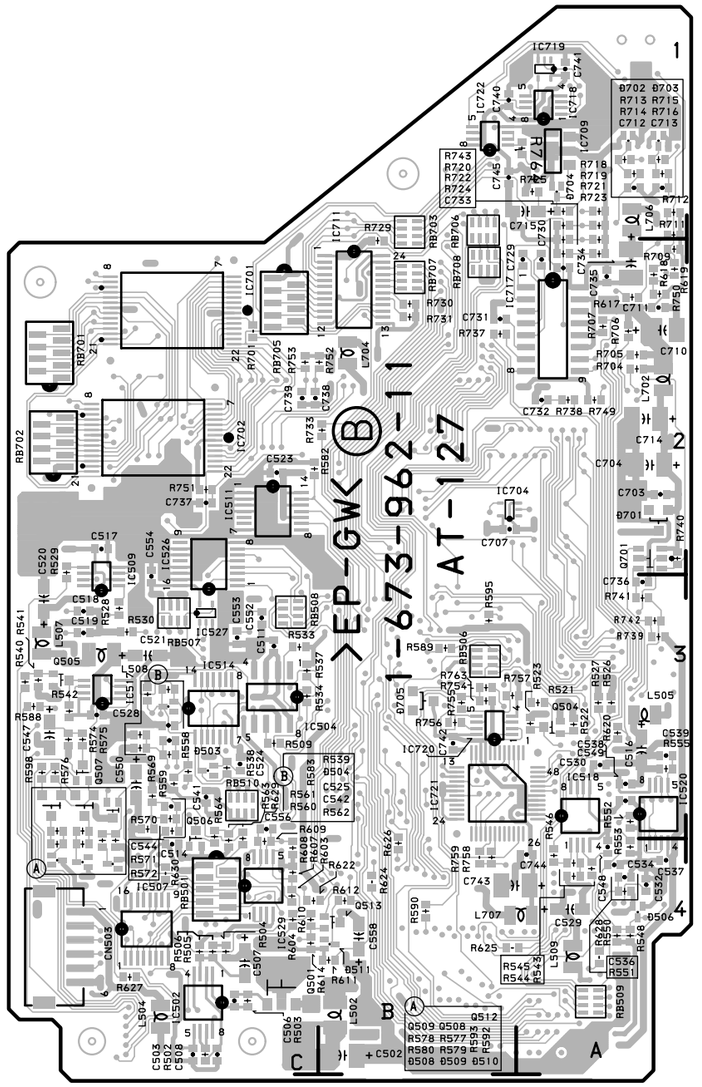

AT-127 -B SIDE-
SUFFIX: -11
FOR DSR-500WS/500WSP

CC-68, CN-2277, CN-1823, CN-1864

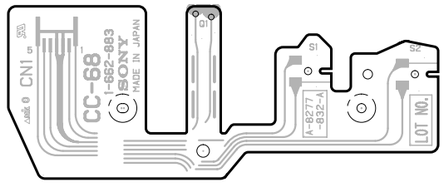

CC-68 -A SIDE-
SUFFIX : -12

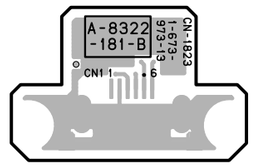

CN-1823 -A SIDE-
SUFFIX: -13

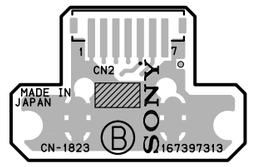

CN-1823 -B SIDE-
SUFFIX: -13

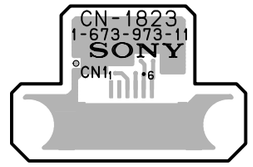

CN-1823 -A SIDE-
SUFFIX: -11, 12

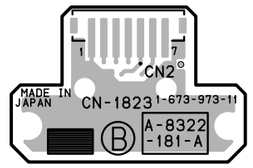

CN-1823 -B SIDE-
SUFFIX: -11, 12

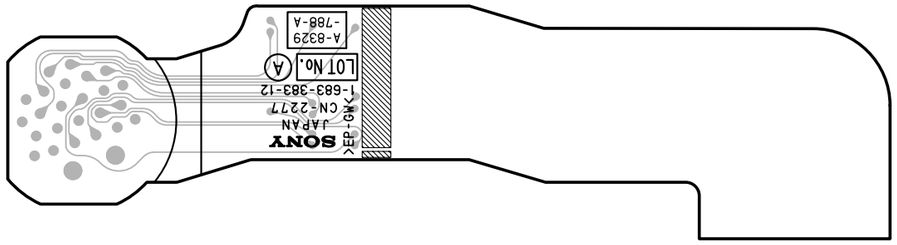

CN-2277 -A SIDE-
SUFFIX: -11, 12
FOR DSR-570WS/570WSP

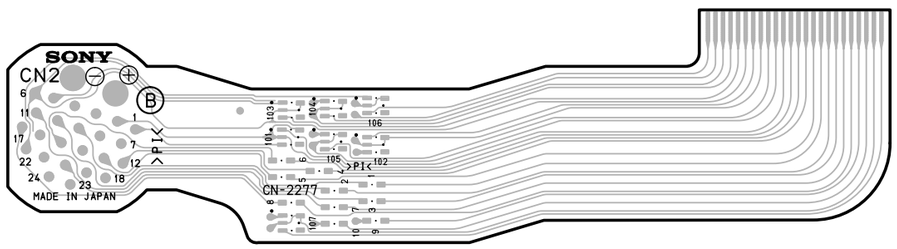

CN-2277 -B SIDE-
SUFFIX: -11, 12
FOR DSR-570WS/570WSP

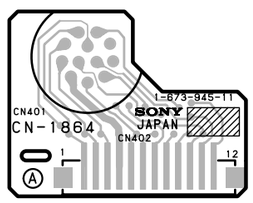

CN-1864 -A SIDE-
SUFFIX: -11

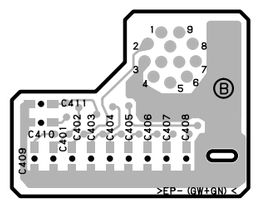

CN-1864 -B SIDE-
SUFFIX: -11

5-5

CN-1865, CN-1866, CN-1867, CN-1873, CN-1874

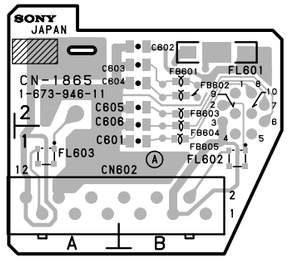

CN-1865 **-A SIDE-**
SUFFIX: -11

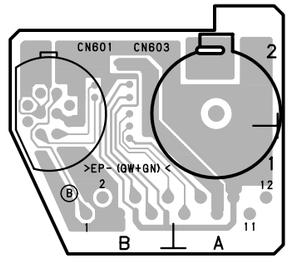

CN-1865 **-B SIDE-**
SUFFIX: -11

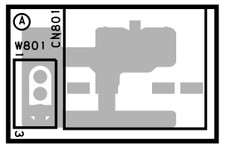

CN-1866 **-A SIDE-**
SUFFIX: -12

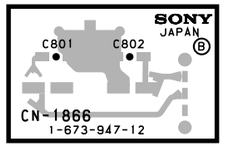

CN-1866 **-B SIDE-**
SUFFIX: -12

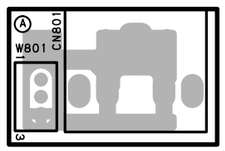

CN-1866 **-A SIDE-**
SUFFIX: -11

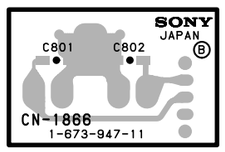

CN-1866 **-B SIDE-**
SUFFIX: -11

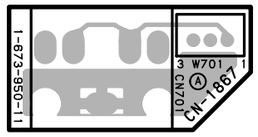

CN-1867 **-A SIDE-**
SUFFIX: -11

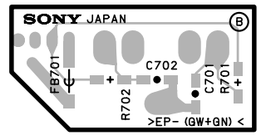

CN-1867 **-B SIDE-**
SUFFIX: -11

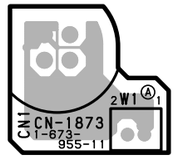

CN-1873 **-A SIDE-**
SUFFIX: -11

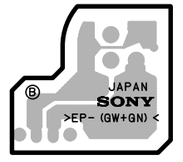

CN-1873 **-B SIDE-**
SUFFIX: -11

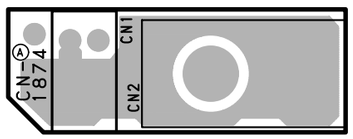

CN-1874 **-A SIDE-**
SUFFIX: -11

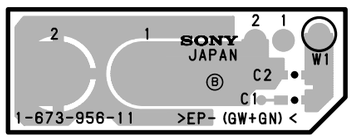

CN-1874 **-B SIDE-**
SUFFIX: -11

5-6

CN-1519, DU-36, DV-21

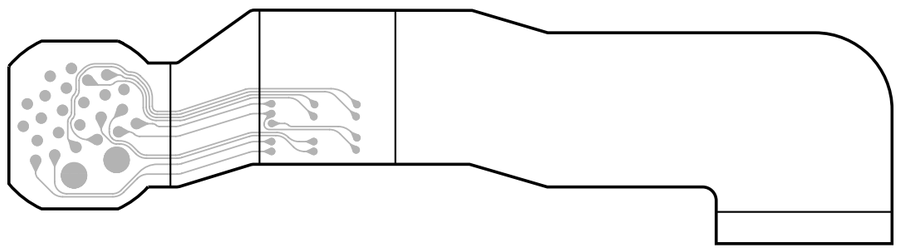

CN-1519 **-A SIDE-**
SUFFIX: -12
FOR DSR-500WS/500WSP

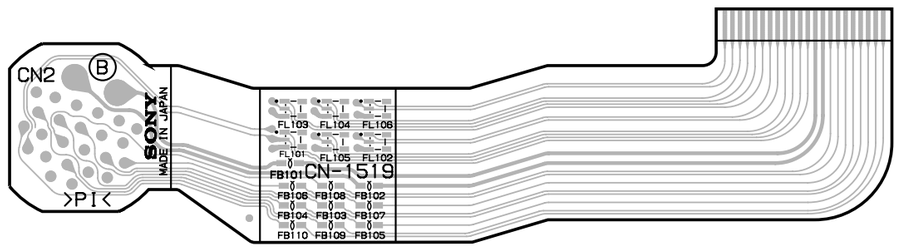

CN-1519 **-B SIDE-**
SUFFIX: -12
FOR DSR-500WS/500WSP

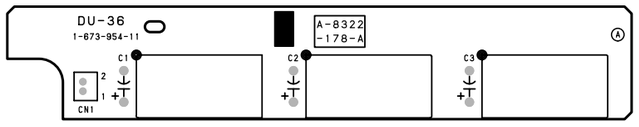

DU-36 **-A SIDE-**
SUFFIX: -11

DU-36 **-B SIDE-**
SUFFIX: -11

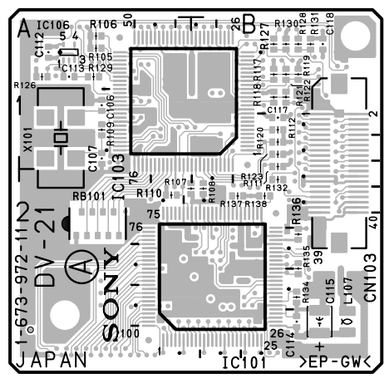

DV-21 **-A SIDE-**
SUFFIX: -11

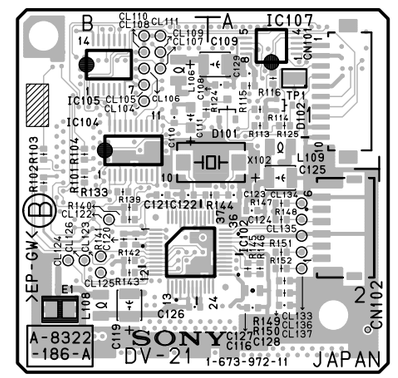

DV-21 **-B SIDE-**
SUFFIX: -11

DV-21(1-673-972-11)

C106	A1	C129	＊A1	CN103	B1	R104	＊B1	R127	B1	R150	＊A2				
C107	A1					R105	A1	R128	B1	R151	＊A2				
C108	＊A1	CL104	＊B1	D101	＊A1	R106	A1	R129	A1	R152	＊A2				
C109	＊A1	CL105	＊B1	D102	＊A1	R107	B2	R130	B1						
C110	＊B1	CL106	＊B1			R108	B2	R131	B1	RB101	A2				
C111	＊B1	CL107	＊B1	E1	＊B2	R109	A1	R132	B2						
C112	A1	CL108	＊B1			R110	A2	R133	＊B2	TP1	＊A1				
C113	A1	CL109	＊B1	IC101	B2	R111	B1	R134	B2						
C114	B2	CL110	＊B1	IC102	＊B2	R112	B1	R135	B2	X101	A1				
C115	B2	CL111	＊B1	IC103	A1	R113	＊A1	R136	B2	X102	＊A1				
C116	＊A2	CL122	＊B2	IC104	＊B2	R114	＊A1	R137	B2						
C117	B1	CL123	＊B2	IC105	＊B1	R115	＊A1	R138	B2	＊: B SIDE					
C118	B1	CL124	＊B2	IC106	A1	R116	＊A1	R139	＊B2						
C119	＊B2	CL125	＊B2	IC107	＊A1	R117	B1	R140	＊B2						
C120	＊B2	CL126	＊B2			R118	B1	R141	＊B2						
C121	＊B2	CL133	＊A2	L106	＊B1	R119	B1	R142	＊B2						
C122	＊B2	CL134	＊A2	L107	B2	R120	B1	R143	＊B2						
C123	＊A2	CL135	＊A2	L108	＊B2	R121	B1	R144	＊A2						
C124	＊A2	CL136	＊A2	L109	＊A1	R122	B1	R145	＊A2						
C125	＊A2	CL137	＊A2			R123	B1	R146	＊A2						
C126	＊B2			R101	＊B2	R124	＊B1	R147	＊A2						
C127	＊A2	CN101	＊A1	R102	＊B2	R125	＊A1	R148	＊A2						
C128	＊A2	CN102	＊A2	R103	＊B1	R126	A1	R149	＊A2						

CP-373(1-638-382-11,12)

C101	*B1	CL236	*D2
C102	*B1	CL238	*D2
C103	*B1	CL240	*D2
C104	*B1	CL241	*D2
C105	*B1	CL242	*D2
C106	*A1	CL243	*D2
C107	A2	CL301	*C2
C108	A1	CL302	*C2
C109	*A1	CL303	*C2
C110	*A1	CL304	*C2
C111	*A1	CL312	*D1
C112	*A1	CL313	*D1
C113	*D1	CL314	*D2
C114	*C1	CL316	*C2
C115	*D1	CL317	*C2
C116	*C1	CL318	*C2
C117	*D1	CL319	*C2
C118	*C1	CL328	*E2
C119	*C1	CL329	*E2
C120	*B2	CL330	*E2
C121	*B2		
C122	*B2	CN1	D2
C123	*B2	CN2	B2
C124	*C2	CN3	F1
C125	*B2	CN5	E2
C126	*A2	CN6	E2
C127	A2	CN7	E2
C128	A2	CN8	F2
C129	*A2	CN9	E1
C130	*A2	CN10	E1
C131	*A2	CN101	B1
C132	*A2	CN102	B2
C133	*C1	CN201	D3
C134	*C2	CN202	C3
C301	*C2	CN203	C3
C302	*C2	CN204	C3
C303	*C2	CN205	D3
C304	*C2	CN206	B3
C305	*C2		
C306	*C2	D101	*A1
C406	*F2	D102	*A1
C413	*F2	D103	*A2
C414	F2	D104	*A2
C415	*E2	D201	*D2
C416	*D2	D202	*D2
C417	*E2	D203	*D2
C501	*C3	D204	*D2
C502	*C3	D205	*D2
C503	*D2	D206	*D2
C504	*D2	D207	*C2
C505	*C3	D208	*D2
C506	*C3	D301	*D2
		D401	*E2
CB401	F1	D402	F1
		D403	*E2
CL101	*B1	D404	*E2
CL102	*B1	D501	*E2
CL103	*B1	D502	*D2
CL104	*B2	D503	*B3
CL105	*B2		
CL106	*B2	FL201	*C3
CL107	*C2	FL202	*D3
CL108	*C2	FL203	*C3
CL109	*C2	FL204	*B3
CL110	*C2	FL205	*C3
CL111	*D2	FL206	*D3
CL112	*D2	FL207	*B3
CL113	*D2	FL208	*B3
CL114	*C2		
CL115	*C2	IC101	*A1
CL116	*D2	IC201	*A2
CL201	*C3	IC301	*C2
CL202	*C3	IC501	*D2
CL203	*D3	IC502	*C3
CL204	*D3	IC503	*C3
CL205	*D3	IC504	*D2
CL207	*B3		
CL208	*B3	L101	*B1
CL209	*B3	L102	*A1
CL210	*B2	L103	*B2
CL211	*C3	L104	*A2
CL212	*C2		
CL213	*D3	PS301	*C2
CL214	*D3	PS401	*F2
CL215	*B3		
CL216	*B3	Q101	*D1
CL218	*B3	Q102	*C1
CL219	*B3	Q103	*C1
CL229	*D2	Q104	*C2
CL230	*D2	Q401	*E2
CL231	*D2	Q402	*F2
CL232	*D2	Q403	*F2
CL234	*D2	Q404	*E2

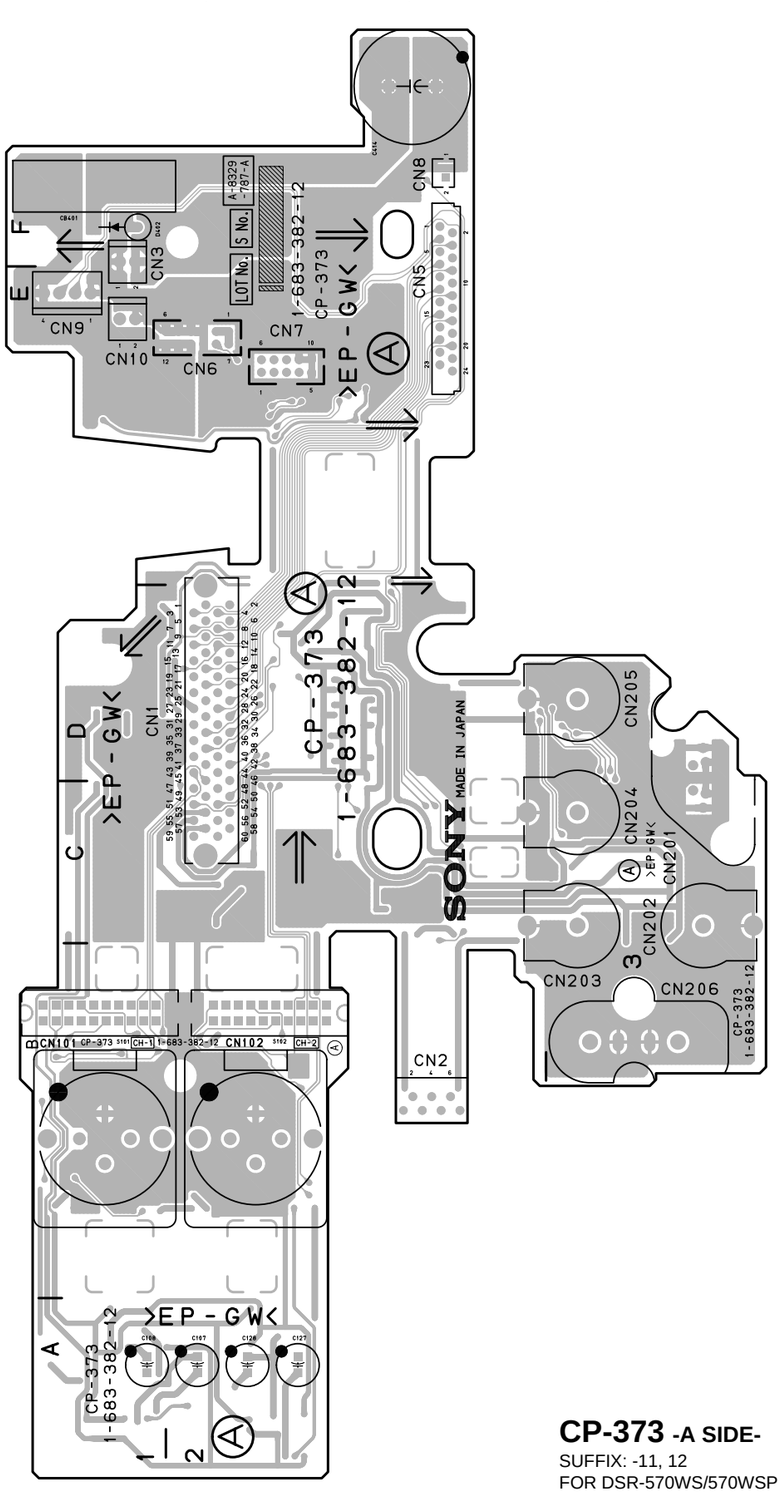

CP-373 -A SIDE-
SUFFIX: -11, 12
FOR DSR-570WS/570WSP

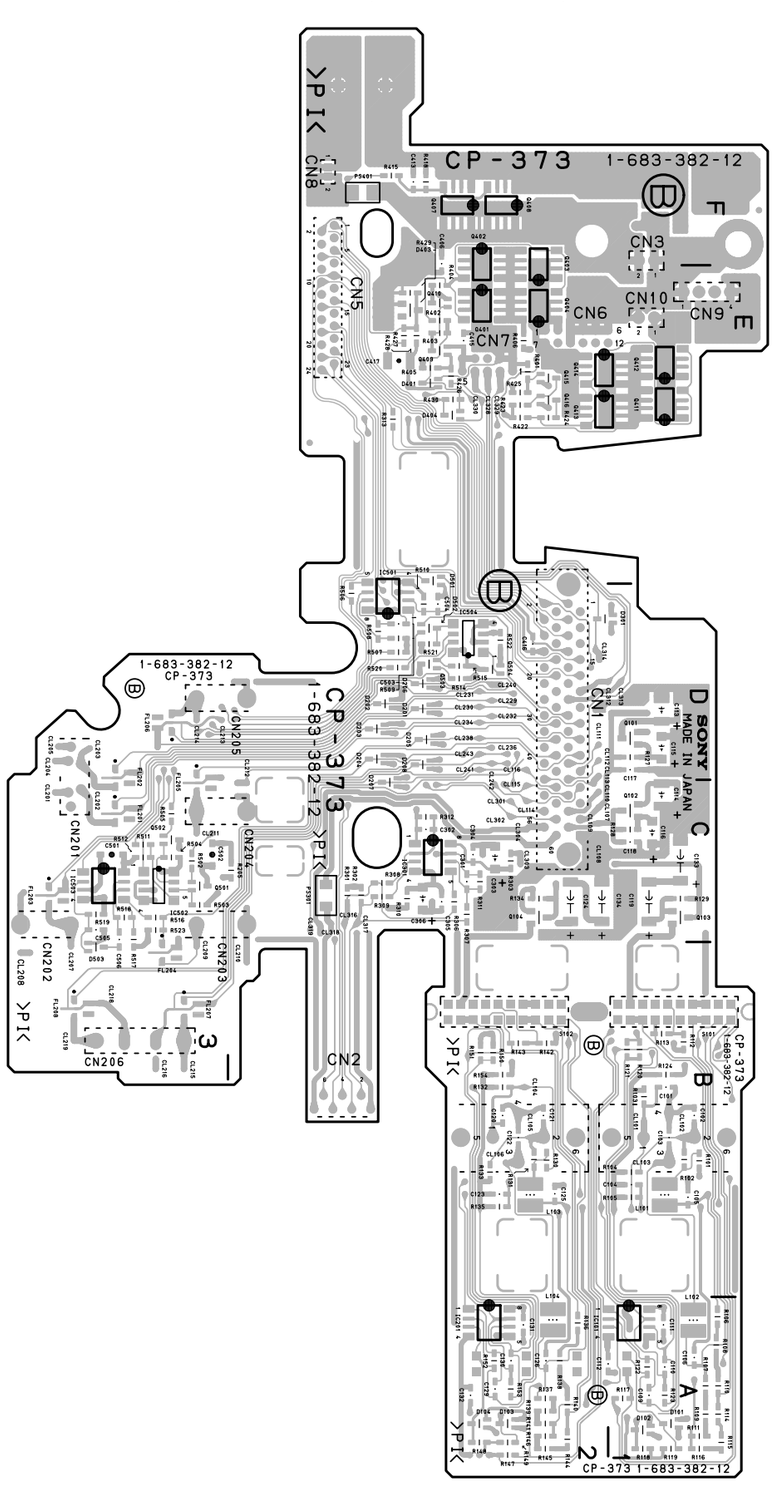

Q407	*F2	R415	*F2
Q408	*F2	R418	*F2
Q409	*E2	R422	*E2
Q410	*E2	R423	*E2
Q411	*E1	R424	*E2
Q412	*E1	R425	*E2
Q413	*E2	R426	*E2
Q414	*E2	R427	*E2
Q415	*E2	R428	*E2
Q416	*E2	R429	*E2
Q501	*C3	R430	*E2
Q502	*C3	R502	*C3
Q503	*D2	R503	*C3
Q504	*D2	R504	*C3
		R505	*C3
R101	*B1	R506	*D2
R102	*B1	R507	*D2
R103	*B1	R508	*D2
R104	*B1	R509	*D2
R105	*B1	R510	*D2
R106	*A1	R511	*C3
R107	*A1	R512	*C3
R108	*A1	R514	*D2
R109	*A1	R515	*D2
R110	*A1	R516	*C3
R111	*A1	R517	*C3
R112	*B1	R518	*C3
R113	*B1	R519	*C3
R114	*A1	R520	*D2
R115	*A1	R521	*D2
R116	*A1	R522	*D2
R117	*A1	R523	*C3
R118	*A1		
R119	*A1	S101	B1
R120	*B1	S102	B2
R121	*B1		
R122	*A1		
R123	*A1	*: B SIDE	
R124	*B1		
R127	*D1		
R128	*C1		
R129	*C1		
R130	*B2		
R131	*B2		
R132	*B2		
R133	*B2		
R134	*C2		
R135	*B2		
R136	*A2		
R137	*A2		
R138	*A2		
R139	*A2		
R140	*A2		
R141	*A2		
R142	*B2		
R143	*B2		
R144	*A2		
R145	*A2		
R146	*A2		
R147	*A2		
R148	*A2		
R149	*A2		
R150	*B2		
R151	*B2		
R152	*A2		
R153	*A2		
R154	*B2		
R205	*C2		
R301	*C2		
R302	*C2		
R303	*C2		
R306	*C2		
R307	*C2		
R308	*C2		
R309	*C2		
R310	*C2		
R311	*C2		
R312	*C2		
R313	*E2		
R401	*E2		
R402	*E2		
R403	*E2		
R404	*E2		
R405	*E2		
R406	*E2		

CP-373 -B SIDE-
SUFFIX: -11, 12
FOR DSR-570WS/570WSP

CP-315(1-668-841-13)

C101	＊B1
C102	＊B1
C103	＊B1
C104	＊B1
C105	＊B1
C106	＊A1
C107	A1
C108	A1
C109	＊A1
C110	＊A1
C111	＊A1
C112	＊A1
C113	＊C1
C114	＊C1
C115	＊C1
C116	＊C1
C117	＊C1
C118	＊C1
C119	＊C1
C120	＊B2
C121	＊B2
C122	＊B2
C123	＊B2
C124	＊C1
C125	＊B2
C126	＊A2
C127	A2
C128	A2
C129	＊A2
C130	＊A2
C131	＊A2
C132	＊A2
C133	＊C1
C134	＊C1
C301	＊C2
C302	＊C2
C303	＊C2
C304	＊C2
C305	＊C2
C306	＊C2
C406	＊E2
C413	＊E2
C414	E3
C415	＊E2
CB401	E1
CN1	C1
CN2	B3
CN3	E1
CN5	E3
CN6	E1
CN7	E2
CN8	E3
CN9	E1
CN101	B1
CN102	B2
D101	＊A1
D102	＊A1
D103	＊A2
D104	＊A2
D202	＊C2
D203	＊C3
D205	＊C2
D206	＊C3
D207	＊C3
D208	＊C2
D209	＊C3
D210	＊C2
D402	E1
FL201	＊C4
FL202	＊C4
FL203	＊C4
FL205	＊C3
FL206	＊C3
FL207	＊B3
FL208	＊B4
IC101	＊A1
IC201	＊A2
IC301	＊C2
L101	＊B1
L102	＊A1
L103	＊B2
L104	＊A2
PS301	＊C3
PS401	＊E3

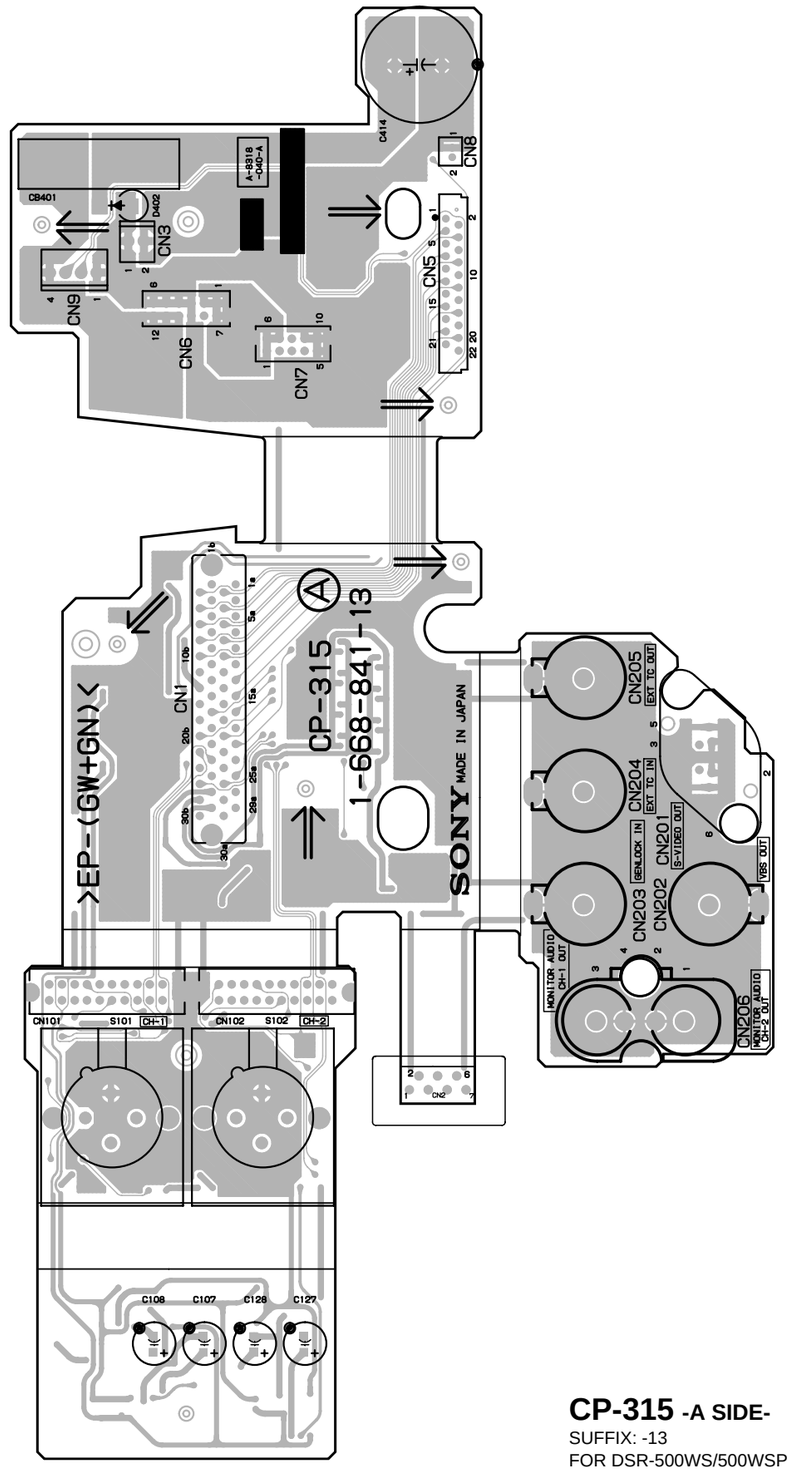

CP-315 **-A SIDE-**
SUFFIX: -13
FOR DSR-500WS/500WSP

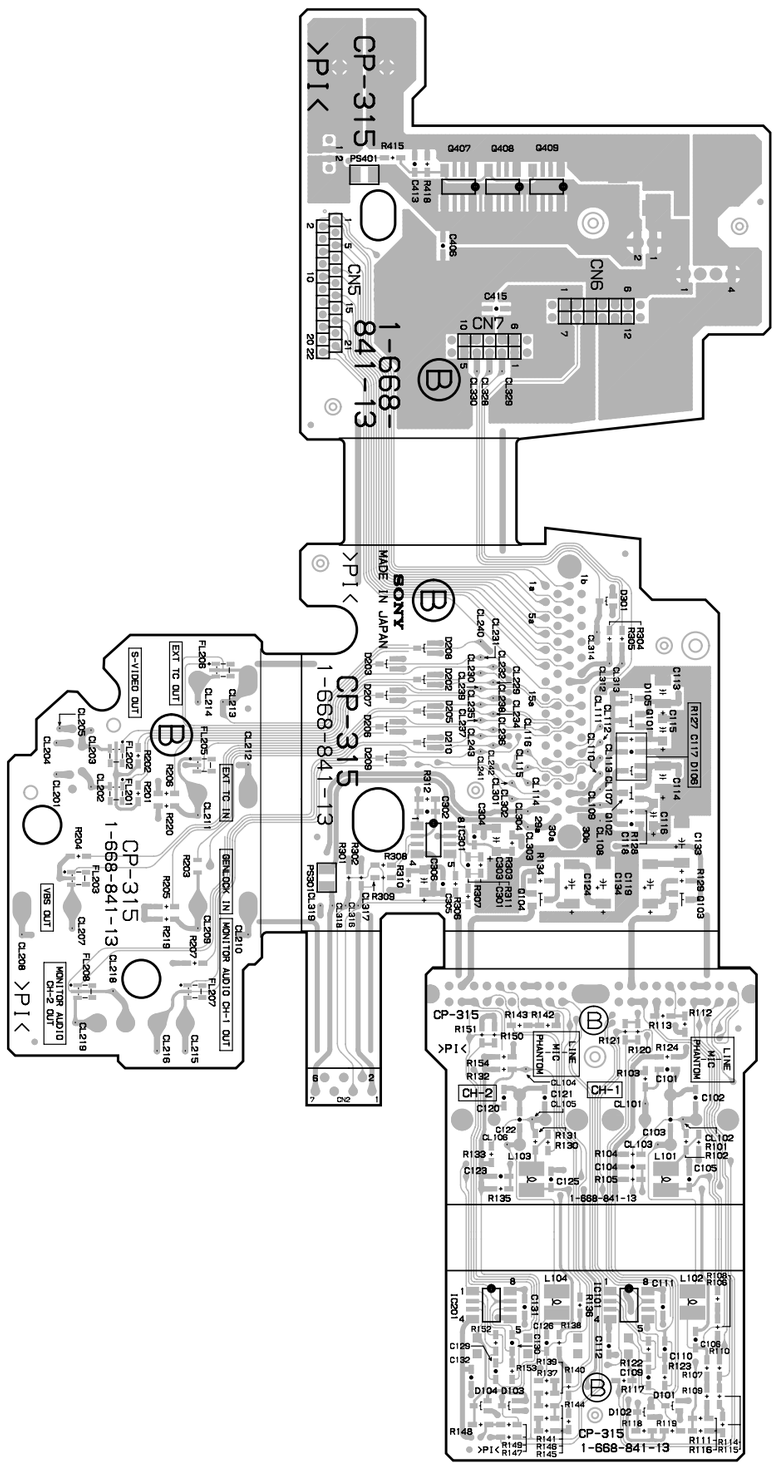

Q101	＊C1
Q102	＊C1
Q103	＊C1
Q104	＊C2
Q407	＊E2
Q408	＊E2
Q409	＊E2
R102	＊B1
R103	＊B1
R105	＊B1
R106	＊A1
R107	＊A1
R108	＊A1
R109	＊A1
R110	＊A1
R111	＊A1
R112	＊B1
R113	＊B1
R114	＊A1
R115	＊A1
R116	＊A1
R117	＊A1
R118	＊A1
R119	＊A1
R120	＊B1
R121	＊B1
R122	＊A1
R123	＊A1
R124	＊B1
R127	＊C1
R128	＊C1
R129	＊C1
R131	＊B2
R132	＊B2
R134	＊C2
R135	＊B2
R136	＊A1
R137	＊A2
R138	＊A2
R139	＊A2
R140	＊A2
R141	＊A2
R142	＊B2
R143	＊B2
R144	＊A2
R145	＊A2
R146	＊A2
R147	＊A2
R148	＊A2
R149	＊A2
R150	＊B2
R151	＊B2
R152	＊A2
R153	＊A2
R154	＊B2
R201	＊C4
R202	＊C4
R203	＊C4
R204	＊C4
R205	＊C4
R206	＊C4
R207	＊C4
R219	＊C4
R301	＊C3
R302	＊C3
R303	＊C2
R304	＊C1
R305	＊C1
R306	＊C2
R307	＊C2
R308	＊C2
R309	＊C3
R310	＊C2
R311	＊C2
R312	＊C2
R415	＊E2
R418	＊E2
S101	B1
S102	B2

＊: B SIDE

CP-315 **-B SIDE-**
SUFFIX: -13
FOR DSR-500WS/500WSP

CP-315(1-668-841-12)

C101	＊B1
C102	＊B1
C103	＊B1
C104	＊B1
C105	＊B1
C106	＊A1
C107	A1
C108	A1
C109	＊A1
C110	＊A1
C111	＊A1
C112	＊A1
C113	＊C1
C114	＊C1
C115	＊C1
C116	＊C1
C117	＊C1
C118	＊C1
C119	＊C1
C120	＊B2
C121	＊B2
C122	＊B2
C123	＊B2
C124	＊C1
C125	＊B2
C126	＊A2
C127	A1
C128	A1
C129	＊B2
C130	＊B2
C131	＊B2
C132	＊B2
C133	＊C1
C134	＊C1
C301	＊C2
C302	＊C2
C303	＊C2
C304	＊C2
C305	＊C2
C306	＊C2
C406	＊E3
C413	＊E2
C414	E3
C415	＊E2
CB401	E1
CN1	C1
CN2	B3
CN3	E1
CN5	E3
CN6	E1
CN7	E2
CN8	E3
CN9	E1
CN101	B1
CN102	B2
D101	＊A1
D102	＊A1
D103	＊A2
D104	＊A2
D202	＊C2
D203	＊C3
D205	＊C2
D206	＊C3
D207	＊C3
D208	＊C2
D209	＊C3
D210	＊C2
D402	E1
FL201	＊C4
FL202	＊C4
FL203	＊C4
FL204	＊C4
FL205	＊C3
FL206	＊C3
FL207	＊B3
FL208	＊B4
IC101	＊A1
IC201	＊A2
IC301	＊C2
L101	＊B1
L102	＊A1
L103	＊B2
L104	＊A2
PS301	＊E3
PS401	＊C3

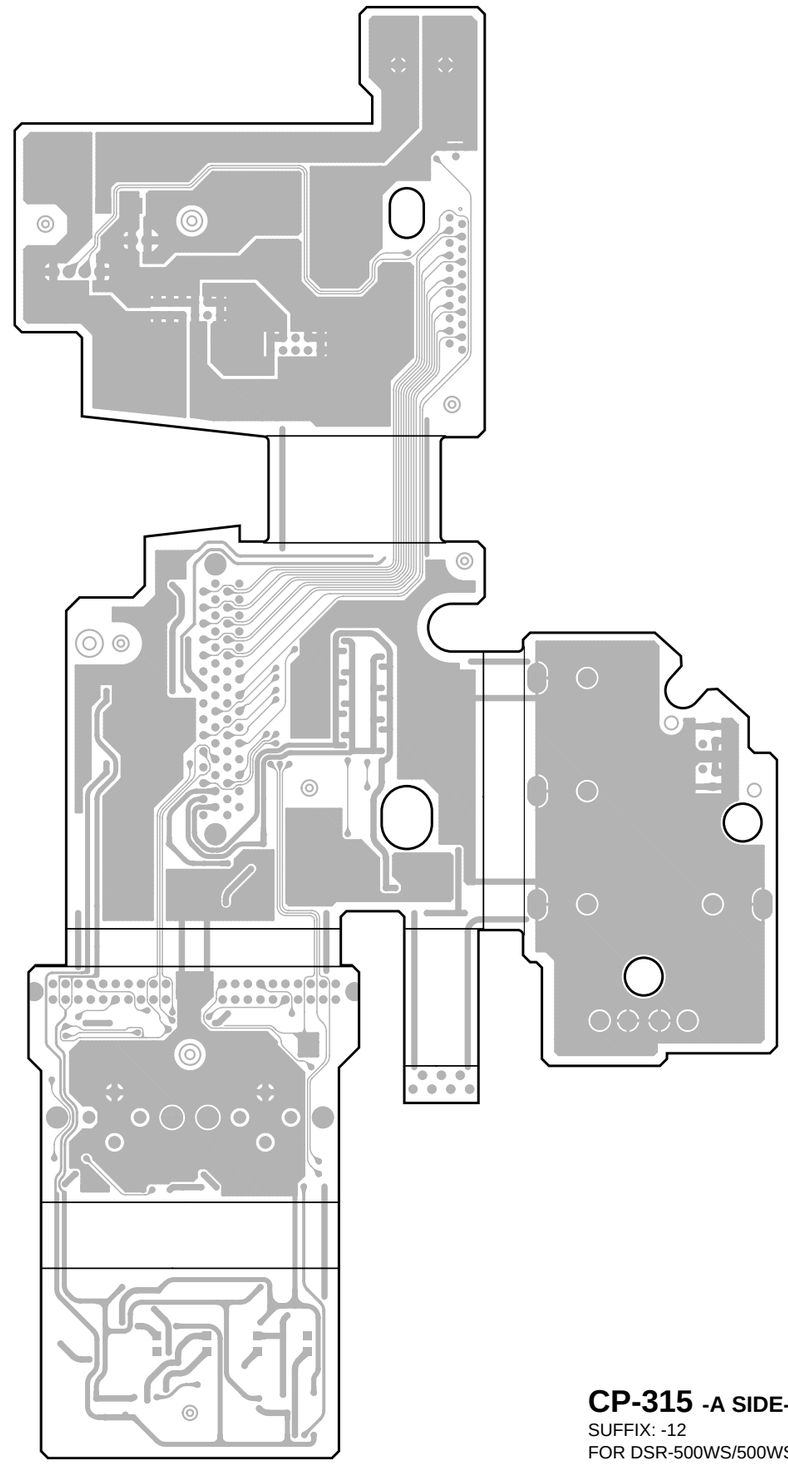

CP-315 -A SIDE-
SUFFIX: -12
FOR DSR-500WS/500WSP

Q101	＊C1
Q102	＊C1
Q103	＊C1
Q104	＊C2
Q407	＊E2
Q408	＊E2
Q409	＊E2
R102	＊B1
R103	＊B1
R105	＊B1
R106	＊A1
R107	＊A1
R108	＊A1
R109	＊A1
R110	＊A1
R111	＊A1
R112	＊B1
R113	＊B1
R114	＊A1
R115	＊A1
R116	＊A1
R117	＊A1
R118	＊A1
R119	＊A1
R120	＊B1
R121	＊B1
R122	＊A1
R123	＊A1
R124	＊B1
R127	＊C1
R128	＊C1
R129	＊C1
R131	＊B2
R132	＊B2
R134	＊C2
R135	＊B2
R136	＊A1
R137	＊A2
R138	＊A2
R139	＊A2
R140	＊A2
R141	＊A2
R142	＊B2
R143	＊B2
R144	＊A2
R145	＊A2
R146	＊A2
R147	＊A2
R148	＊A2
R149	＊A2
R150	＊B2
R151	＊B2
R152	＊A2
R153	＊A2
R154	＊B2
R201	＊C4
R202	＊C4
R204	＊C4
R205	＊C4
R206	＊C4
R207	＊C4
R219	＊C4
R301	＊C3
R302	＊C3
R303	＊C2
R304	＊C1
R305	＊C1
R306	＊C2
R307	＊C2
R308	＊C2
R309	＊C3
R310	＊C2
R311	＊C2
R312	＊C2
R415	＊E2
R418	＊E2
S101	B1
S102	B2

＊: B SIDE

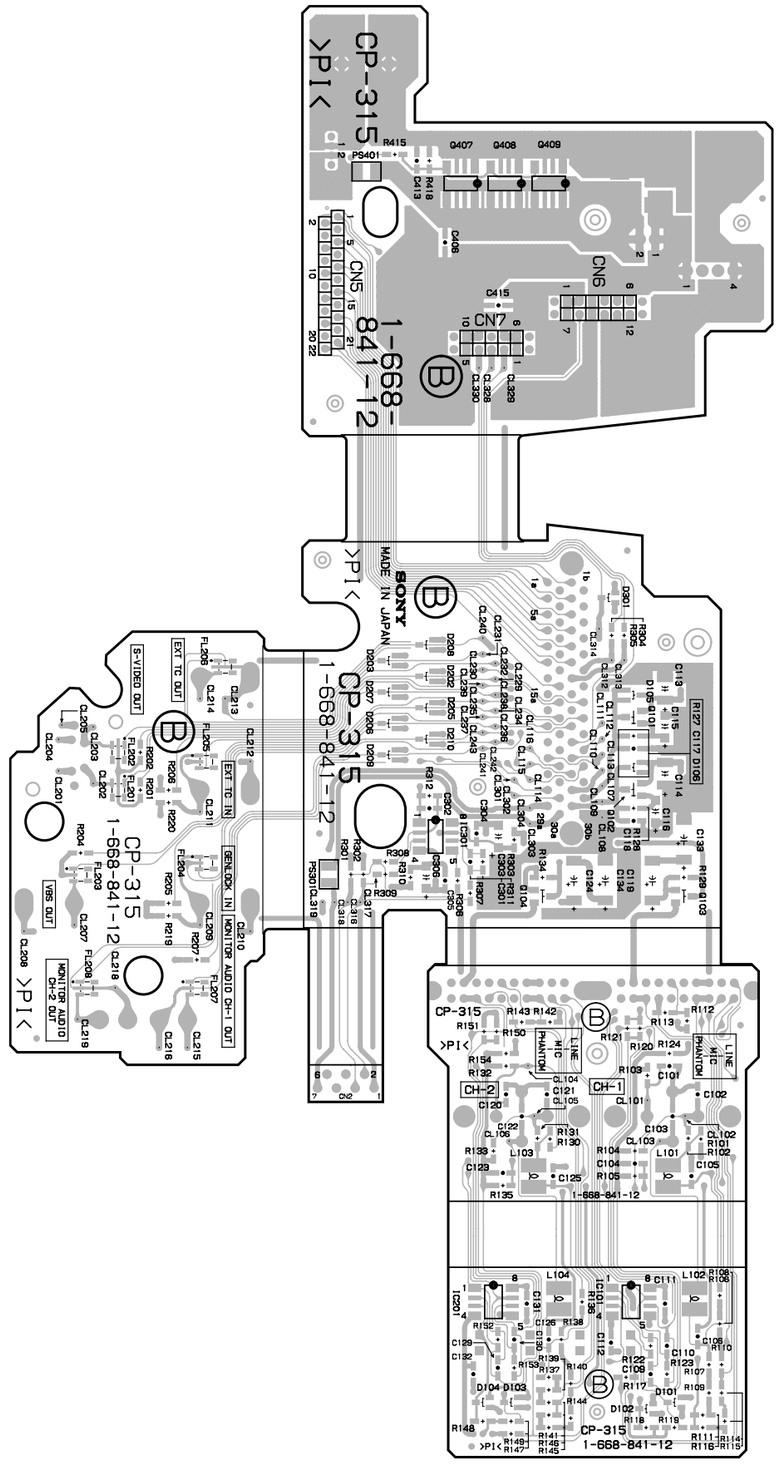

CP-315 -B SIDE-
SUFFIX: -12
FOR DSR-500WS/500WSP

DPR-141 **SUFFIX: -14**

DPR-141(1-673-975-14)

C101	*C7	C227	*A4	C365	*D2	C623	*F2	C837	*G2	CL127	*D1	IC206	A4	L101	*C4	R102	*C7	R243	*B7	R379	*C6	R532	C6	R818	*G3	R1010	*F6	RB755	*E7
C102	*A7	C228	A4	C366	*D3	C631	F1	C901	*F6	CL128	*D1	IC207	*A4	L102	*A6	R103	*B7	R244	C4	R380	*C5	R533	D6	R819	G4	R1011	*F6	RB756	*F4
C103	*A7	C229	*A4	C367	*D3	C632	E1	C902	F6	CL129	*D1	IC208	*A4	L103	A6	R104	*B7	R245	A4	R381	*C5	R534	D6	R820	G4	R1012	*F6	RB771	*D7
C104	*C7	C231	A6	C368	*C3	C633	F1	C903	F6	CL130	*D1	IC209	*C3	L104	*A6	R105	*B7	R246	A4	R382	C6	R535	D6	R821	G3	R1014	F4	RB772	E5
C105	*A7	C232	B4	C369	*C3	C651	*E2	C904	F6	CL131	*D1	IC210	A5	L105	A6	R106	*C7	R247	*B7	R383	C6	R536	C6	R822	G4	R1015	*G6	RB774	E5
C106	*A7	C233	*A5	C370	*C3	C652	F3	C923	*F4	CL132	*D1	IC211	*A2	L106	*B6	R107	*C7	R248	*B7	R384	C6	R537	D6	R823	*G3	R1016	*G6	RB775	*E7
C107	*C7	C234	A4	C371	*C3	C653	E3	C924	*F4	CL133	*D1	IC212	*A2	L107	A6	R108	*C7	R249	*B7	R385	*B6	R538	D6	R824	*G3	R1017	*F4	RB802	*G3
C108	A7	C235	*A6	C372	*C2	C654	F3	C925	*G5	CL135	*D1	IC213	*A3	L201	A7	R109	*B7	R250	*A4	R386	*B6	R539	D6	R825	G4	R1018	*F4		
C109	*C7	C236	B4	C373	*C2	C655	E3	C926	*G5	CL136	*D1	IC214	*A3	L301	*C5	R110	*C7	R251	*C4	R387	A6	R540	*C5	R826	F4	R1019	*G6	TP201	A3
C110	*C7	C237	*A5	C374	D2	C656	*E2	C927	*G5	CL137	*D1	IC215	*A2	L302	*C5	R111	*C7	R252	*C4	R388	A6	R541	*C5	R827	G3	R1020	*G6	TP501	C6
C111	*C7	C238	*A2	C375	*D3	C657	*E2	C928	*G5	CL139	*D1	IC216	A2	L303	*B5	R112	*C7	R253	*C4	R389	B6	R542	*C5	R828	G4			TP502	C6
C112	*C7	C239	*A3	C376	D2	C658	*F2	C929	*G5	CL140	*D1	IC217	C4	L305	B6	R113	*B7	R254	A4	R390	*D2	R543	*C6	R829	*G3	RB101	*A5	TP503	D6
C113	*A7	C240	A4	C377	*D3	C701	*E4	C930	*G5	CL141	*D1	IC218	*A4	L306	C3	R114	*B7	R255	*B7	R391	*D2	R544	C5	R830	*G2	RB102	*A5	TP712	D4
C114	*C7	C241	*A3	C378	*D3	C702	*E4	C931	*G5	CL142	*D1	IC219	*A2	L307	*D3	R115	*B7	R256	*A4	R392	*C1	R545	C5	R901	*F6	RB103	*A5		
C115	*B7	C242	*B2	C379	*D3	C703	*E4	C932	*G5	CL143	*D1	IC301	C4	L308	D2	R116	*A7	R257	*A4	R393	*C1	R548	D2	R902	*F6	RB104	*A5	X401	D3
C116	*C7	C243	*A3	C380	*D3	C704	*E4	C933	*G6	CL144	*D1	IC302	*C4	L309	D3	R117	*A7	R258	*A3	R394	D3	R551	C1	R903	*F6	RB105	*A5	X711	D4
C117	*A7	C244	*A3	C381	*E2	C705	*E4	C934	*G6	CL145	*D1	IC303	C4	L310	*E3	R118	*A7	R259	*A4	R395	*D2	R552	D1	R904	*F6	RB106	*A5	X751	*F5
C118	*C7	C245	*A2	C382	*D3	C711	D4	C935	*G6	CL146	*D1	IC304	*C3	L501	*D5	R119	*A7	R301	D5	R396	*D2	R553	D1	R905	*F6	RB107	*B5		
C119	A7	C246	A4	C383	*D2	C712	D4	C936	*G6	CL147	*D1	IC305	*C4	L502	*D5	R120	*A7	R302	D4	R397	*D2	R559	*D5	R906	*F6	RB108	*B5	*: B SIDE	
C120	*A7	C247	*B1	C384	*D2	C714	D4	C937	*G6	CL148	*D1	IC306	C3	L503	B1	R121	*C7	R303	*D4	R398	*D2	R560	C6	R913	*G5	RB109	*A5		
C121	*A7	C248	*A3	C385	E3	C715	E5	C938	*G6	CL149	*D1	IC307	C5	L601	*E1	R122	*C7	R304	*D4	R399	*D2	R561	*F7	R914	*F5	RB201	*A6		
C122	A7	C249	A2	C386	E3	C716	*E4	C939	*G6	CL150	*D1	IC308	B6	L611	E1	R123	C4	R305	*D4	R401	*D3	R563	*C1	R916	*G5	RB202	*C6		
C123	*C4	C250	*A2	C387	D3	C717	*E4	C940	*G6	CL151	*D1	IC309	*D2	L651	F3	R124	B4	R306	*D4	R402	*D2	R564	*D1	R917	*G5	RB203	*D6		
C124	C4	C251	B4	C388	D3	C727	F4	C941	*G6	CL152	*D1	IC310	*C2	L701	*E4	R125	*B4	R307	*D4	R403	*D3	R565	*D1	R918	*G5	RB204	A5		
C125	B4	C252	*A1	C389	*D3	C728	F5	C942	*G6	CL153	*C1	IC311	*D2	L711	E5	R126	B4	R308	*D4	R404	*D2	R568	*E7	R919	*G6	RB205	A5		
C126	*C7	C253	*A2	C390	D3	C729	F4	C943	G6	CL154	*C1	IC312	*D3	L713	*E4	R127	*B4	R309	*D4	R405	*D2	R569	*F7	R920	*G6	RB206	A5		
C127	*B4	C255	*C4	C391	D3	C730	F4	C944	G6	CL155	*C1	IC313	*D3	L751	F5	R128	*B4	R310	*D3	R406	*D2	R571	C3	R921	*G6	RB207	A5		
C128	*B4	C256	*C4	C392	D4	C731	F4	C945	*G6	CL156	*C1	IC314	D3	L771	D5	R129	*C4	R311	*C4	R407	*E2	R572	*C6	R922	*G6	RB208	A4		
C129	*B4	C257	*C4	C393	*C4	C732	*E4	C946	*G6	CL501	*C3	IC315	*D3	L772	F6	R130	*B4	R312	*D3	R408	*B7	R573	*D6	R923	*G6	RB209	*C6		
C130	*A4	C258	*A4	C394	*C4	C733	*E4	C947	*G6	CL712	*D4	IC316	E4	L781	*D7	R131	B4	R313	*D3	R409	*B7	R574	B1	R924	*G6	RB210	A4		
C131	*B4	C301	D4	C395	*C4	C734	*E4	C948	*G6	CL771	*E7	IC317	*D3	L801	F2	R132	*B4	R314	*C3	R410	*B7	R602	D1	R925	*G6	RB211	A4		
C132	*C4	C302	C4	C396	*C5	C735	*E4	C949	*G7	CL801	*G2	IC318	C4	L811	F3	R133	*B4	R315	*C4	R411	D3	R616	E3	R926	*G6	RB212	*D6		
C133	*C4	C303	C4	C397	*C4	C736	*E4	C950	*G7	CL802	*G2	IC319	*C5	L821	G4	R134	*A4	R317	*C4	R412	D3	R651	*E2	R927	*G6	RB213	A4		
C134	*A6	C304	D4	C398	*C4	C751	F5	C951	G6	CL811	*G3	IC320	C4	L823	F4	R135	*B4	R318	*C4	R413	*C3	R658	*D1	R928	*G6	RB214	*A2		
C135	*A6	C305	*D3	C399	C4	C752	*D5	C952	*G7	CL812	*G4	IC321	*D2	L824	G4	R136	*B4	R319	*C3	R414	*C3	R701	*D4	R929	*G6	RB215	*A2		
C136	*A6	C306	*D4	C400	C4	C753	*F5	C954	*G2	CL821	*G3	IC322	C4	L826	G2	R137	*A6	R320	*C3	R415	*D3	R702	*D7	R930	*G6	RB216	*A1		
C137	*A6	C307	*C4	C401	C4	C754	*F5	C955	*G2	CL980	*F7	IC323	C3	L827	G2	R138	*A6	R321	B4	R416	*D4	R703	*D7	R931	*G6	RB217	*B2		
C138	*A6	C308	*D3	C402	C4	C755	*F5	C956	*G2	CL981	*F7	IC324	D4	L901	F6	R139	*A6	R322	*B5	R417	*E3	R704	*E4	R932	*G6	RB218	*B2		
C139	*A6	C309	*C4	C403	*C4	C756	*F6	C957	G6	CL982	*E1	IC325	*B4	L902	F6	R140	*A6	R323	*C5	R418	*E3	R705	*E4	R933	*G6	RB219	*A2		
C140	*A6	C310	*C4	C404	*D2	C757	*D6	C958	G6			IC501	*F7	L903	*F4	R141	*A6	R324	*C5	R419	*D4	R706	*E4	R934	G6	RB220	*A2		
C141	*A6	C311	*C4	C405	D3	C758	*F7	C959	*F5	CN1	F7	IC502	*C6	L904	*G5	R142	*A6	R325	*B5	R420	D3	R707	*E4	R935	G6	RB221	B4		
C142	*A6	C312	*C3	C406	C4	C759	*F6	C960	G2	CN2	B7	IC503	*D6	L905	*G6	R143	*A6	R326	*B5	R421	*D4	R708	*E4	R936	G6	RB222	B4		
C143	*A5	C313	*C3	C408	D4	C771	D5	C961	*G5	CN3	A1	IC504	D3	L906	*G6	R144	*A6	R327	*B5	R422	D3	R709	*D7	R937	G6	RB223	*A2		
C144	*A5	C314	*B5	C409	*E4	C772	D5	C962	F3	CN4	D1	IC505	C2	L907	*G7	R145	*A6	R328	*B5	R424	*D4	R711	D4	R938	G6	RB224	*A3		
C145	A6	C315	B5	C410	*C4	C773	E5	C963	*F5	CN5	C1	IC506	C3	L908	*G7	R146	*A6	R329	*C6	R425	*D3	R712	*D4	R939	*G6	RB225	*A3		
C146	*A6	C316	B5	C411	*B5	C774	D6	C966	*F5	CN6	C6	IC509	C1	L909	*G2	R147	*A6	R330	*C6	R426	D3	R713	*E3	R940	G6	RB226	*A3		
C147	*A6	C317	B5	C501	*C6	C775	F6	C971	*F4	CN7	B2	IC510	C1	L980	*F7	R148	*A6	R331	*C6	R427	*D4	R715	D4	R941	G6	RB227	*B4		
C148	*A6	C318	*C5	C502	*D6	C776	*E6	C972	F4	CN9	F6	IC511	D3	L981	*F7	R149	*A6	R332	*C6	R429	*C4	R720	*D7	R942	G6	RB228	*B4		
C149	*A6	C319	*C5	C503	*C6	C777	*E6	C973	F5			IC512	*C1	L982	*G7	R150	*A6	R333	*C6	R430	C4	R723	F4	R943	G6	RB229	*B3		
C150	*A6	C320	*C3	C504	*D6	C778	*E6	C980	*F7	D101	*A7	IC513	C3	L983	*G7	R151	*A6	R334	*C6	R431	*C4	R724	F4	R944	G2	RB230	*B3		
C151	*A6	C321	*C5	C507	*F7	C779	F6	C981	*F7	D102	*A7	IC514	D5	L984	*G7	R152	*A6	R335	*C6	R432	*C4	R725	*E4	R945	G2	RB231	*B3		
C152	*A6	C322	*D4	C508	C5	C780	F6	C982	*G7	D301	*D4	IC517	*C1			R153	*B5	R336	*C6	R433	*C4	R726	*D7	R946	G2	RB232	*B3		
C153	*A6	C323	*D4	C509	C6	C781	*E6	C983	*G7	D302	*C4	IC518	B1	LV825	G3	R154	*B6	R337	*C6	R434	C4	R727	F4	R947	G2	RB233	*B3		
C154	*A6	C324	*D3	C510	C5	C782	D6	C984	*G7	D303	*C3	IC521	C2			R201	*A4	R338	*C6	R435	C4	R728	*E4	R950	F2	RB234	*B3		
C155	*A5	C325	*C6	C511	*D5	C783	*D7	C985	F6	D304	*E3	IC522	B1	Q101	*A7	R202	*A4	R339	*B6	R436	C5	R729	*E4	R951	G2	RB235	*B2		
C156	*A5	C326	*C6	C512	*D6	C784	*D7	C986	F6	D701	*E4	IC601	D2	Q102	*C7	R203	*A4	R340	*B6	R437	C4	R730	*E4	R958	*G6	RB236	*B2		
C157	A6	C327	*C6	C513	*D6	C785	*E7	C987	*F5	D702	*E4	IC611	E2	Q103	*C7	R204	*A4	R341	C6	R438	*E3	R731	*E4	R959	*G6	RB237	*B2		
C158	*A6	C328	*C6	C514	*D6	C786	*F7	C988	*F5	D713	*E4	IC621	F2	Q104	*A7	R206	*A4	R342	C6	R439	C4	R732	*F6	R960	*G6	RB238	*B2		
C159	*B6	C329	*B6	C515	*D6	C801	*F4	C989	*F5	D714	*E4	IC631	*E1	Q105	*A7	R207	*A4	R343	*B6	R440	C4	R733	*F6	R963	*G6	RB239	*B2		
C160	*B6	C330	*C6	C516	*C5	C802	*F4	C990	*F5	D821	*G3	IC651	*E3	Q106	*A6	R208	*A4	R344	*C6	R441	C4	R734	*F4	R964	*G6	RB240	*B1		
C161	*B6	C331	B6	C517	*C5	C803	F2	C991	*F6	D901	*F5	IC652	*E2	Q107	*A6	R209	*A4	R345	*B6	R442	C3	R751	*E7	R965	*G6	RB241	*B1		
C162	*B6	C332	*C6	C518	*C5	C804	F3	C992	*G6	D902	F5	IC653	*F2	Q108	*A6	R210	*A4	R346	*B6	R443	D4	R752	*F5	R966	G6	RB301	D4		
C163	*B6	C333	*B6	C521	C5	C805	G4	C993	F5			IC706	*D4	Q301	*C6	R211	*A5	R347	*B6	R444	D4	R753	E5	R967	*G6	RB302	*D4		
C164	*B6	C334	*C6	C522	B1	C806	G4	C994	F5	E501	C6	IC711	E4	Q302	*C6	R212	*A4	R348	*B6	R445	C3	R754	*F5	R968	*G6	RB303	*C2		
C165	*B6	C335	*C6	C523	*C3	C807	G4	C995	F4	E711	F3	IC751	*E5	Q303	*C6	R213	*A4	R349	*B6	R450	*B4	R755	*F5	R970	*G6	RB304	C2		
C166	*B6	C336	*C6	C524	*C3	C808	*G5	C996	F4			IC752	*F7	Q304	*B6	R214	*A5	R350	*C6	R451	*B5	R758	*F6	R971	*F7	RB305	C2		
C167	*A5	C337	*C6	C527	*C1	C809	F3	C997	F4	FB301	*C5	IC771	E6	Q305	*C6	R215	*B4	R351	*C6	R501	*D7	R759	*E6	R976	*F6	RB306	*C4		
C168	*B5	C338	*B6	C528	D1	C810	G4	C998	*F4	FB302	*C5	IC772	*E6	Q306	*C6	R216	*A5	R352	*C6	R502	C2	R760	*E6	R977	*F6	RB307	*C4		
C169	A6	C339	*B6	C529	D2	C811	*G3	C999	F4	FB303	D3	IC773	*E6	Q307	*C6	R217	*A4	R353	*C6	R503	C2	R761	*E6	R978	*F6	RB501	D3		
C201	*A7	C340	C6	C530	C1	C812	G4	C1000	F5	FB304	*E3	IC781	*D7	Q308	*B6	R218	*A5	R354	*C6	R504	*C3	R763	*E6	R980	*F6	RB503	*C1		
C202	*A7	C341	C6	C531	*B1	C813	*G4	C1001	F4			IC801	*F2	Q309	*C5	R219	*B4	R355	*C6	R505	C3	R764	*F6	R981	*F6	RB504	*C1		
C203	*A4	C342	A6	C532	C1	C814	*G3	C1002	F5	FL301	B6	IC811	*F3	Q310	*C5	R220	*A5	R356	*C6	R507	C3	R765	*E7	R982	*F6	RB505	*D1		
C204	A7	C343	B6	C534	D2	C815	*G3	C1003	F5	FL302	C6	IC821	*F4	Q311	*C6	R221	*B4	R357	*C6	R508	C2	R766	*E6	R988	F6	RB506	*D1		
C205	*A4	C344	*C5	C535	C2	C816	*G4	C1004	F5	FL303	B6	IC822	*F4	Q312	A6	R222	*A3	R358	*C6	R509	*C6	R767	*E6	R989	F6	RB507	*D1		
C206	*A4	C345	*C6	C536	B1	C817	*G4	C1005	F5	FL304	C6	IC823	*G4	Q313	C4	R223	*A3	R359	*C6	R510	*C6	R768	*D4	R990	*F5	RB508	*D1		
C207	*A4	C346	*C5	C537	C1	C818	*G4	C1006	F4	FL305	C6	IC824	*G3	Q501	*C6	R224	*A4	R360	*B6	R511	*D6	R771	*E7	R991	*F6	RB509	*B1		
C209	*A5	C347	*C6	C539	C3	C819	*F4	C1007	F4	FL306	B6	IC825	*G2	Q502	*C6	R225	*A4	R361	*C6	R512	*D5	R772	*D7	R992	*F5	RB510	C1		
C210	*B5	C348	C6	C546	*C6	C820	G3			FL307	C4	IC826	G4	Q503	*D6	R226	*B5	R362	C6	R513	*D5	R776	*E7	R993	*F6	RB511	C1		
C211	*A5	C349	*B5	C547	*F7	C821	G3	CL110	*D1	FL501	C6	IC901	F6	Q504	C6	R227	*B4	R363	C6	R514	*D5	R777	E5	R994	*F5	RB512	*B1		
C212	*B5	C350	*B5	C548	*D6	C822	F3	CL111	*D1	FL502	D6	IC905	G5	Q505	D6	R228	*A4	R364	*B6	R515	*F7	R778	D5	R995	*F5	RB513	*C1		
C213	*A4	C351	*B5	C549	*D6	C823	F4	CL112	*D1	FL503	D6	IC906	G6	Q506	C6	R229	*A4	R365	*C6	R516	*F7	R779	*E7	R996	*F5	RB514	*C1		
C214	*A4	C352	*C3	C550	*B1	C824	*G3	CL114	*D1			IC907	G6	Q507	D6	R230	*A5	R366	*B6	R517	*F7	R801	*G5	R997	*F5	RB515	*B1		
C215	*A5	C353	*C3	C601	D1	C825	*G3	CL115	*D1	IC101	*C7	IC908	G6	Q508	D6	R231	*A5	R367	*B6	R518	*F7	R802	*G5	R998	*F5	RB516	C5		
C216	*B4	C354	*D2	C603	*E1	C826	F3	CL116	*D1	IC102	*B7	IC911	G2	Q823	G4	R232	A4	R368	*B6	R519	C6	R803	*G5	R999	*F5	RB517	C5		
C217	*A4	C355	*C3	C604	*D2	C827	G3	CL117	*D1	IC103	*A7	IC912	*G5	Q901	G6	R233	A4	R369	*B6	R520	C6	R804	*G5	R1000	*F5	RB518	*C5		
C218	*A3	C356	*D2	C605	D1	C828	G4	CL118	*D1	IC104	B4	IC913	F4	Q902	*G6	R234	*B4	R370	*C6	R521	D6	R806	G4	R1001	*F5	RB519	*C5		
C219	*A4	C357	*C3	C606	E3	C829	G4	CL119	*D1	IC105	*A4	IC917	*F6	Q903	*G6	R235	*A4	R371	*C5	R522	*D6	R808	G4	R1002	F5	RB520	*C6		
C220	*A5	C358	*C1	C611	*E2	C830	G3	CL120	*D1	IC106	*A6	IC918	*F6	Q904	*G6	R236	*A4	R372	*C5	R523	*D6	R810	F3	R1003	F5	RB521	*C6		
C221	*A4	C359	*C1	C612	E1	C831	*G3	CL121	*D1	IC107	*A6	IC919	F5	Q905	*G6	R237	*A3	R373	*C6	R524	*C6	R812	*G3	R1004	F5	RB522	C5		
C222	*B4	C360	*C1	C613	*F2	C832	*G2	CL122	*D1	IC108	*B6	IC921	F5	Q906	F6	R238	*A2	R374	*C6	R525	*D6	R813	G4	R1005	F5	RB611	E3		
C223	*B4	C361	*C1	C614	E1	C833	*G2	CL123	*D1	IC201	*A5	IC923	F4	Q907	G6	R239	*A2	R375	*C6	R526	D6	R814	*G3	R1006	F4	RB711	D4		
C224	*A4	C362	*D2	C615	F2	C834	*G2	CL124	*D1	IC202	*A5	IC924	F4	Q908	F6	R240	*B3	R376	*C5	R527	D6	R815	F4	R1007	*F6	RB712	F4		
C225	*B4	C363	*D2	C621	*F1	C835	*G2	CL125	*D1	IC204	*A4	IC925	F4			R241	A4	R377	*C5	R528	C6	R816	F3	R1008	*F6	RB713	F4		
C226	*B4	C364	*D2	C622	*F1	C836	*G1	CL126	*D1	IC205	*A4			R101	*C7	R242	A4	R378	*C6	R529	D6	R817	*G3	R1009	*F6	RB753	E5		

5-10 (b)

DPR-141
SUFFIX: -14

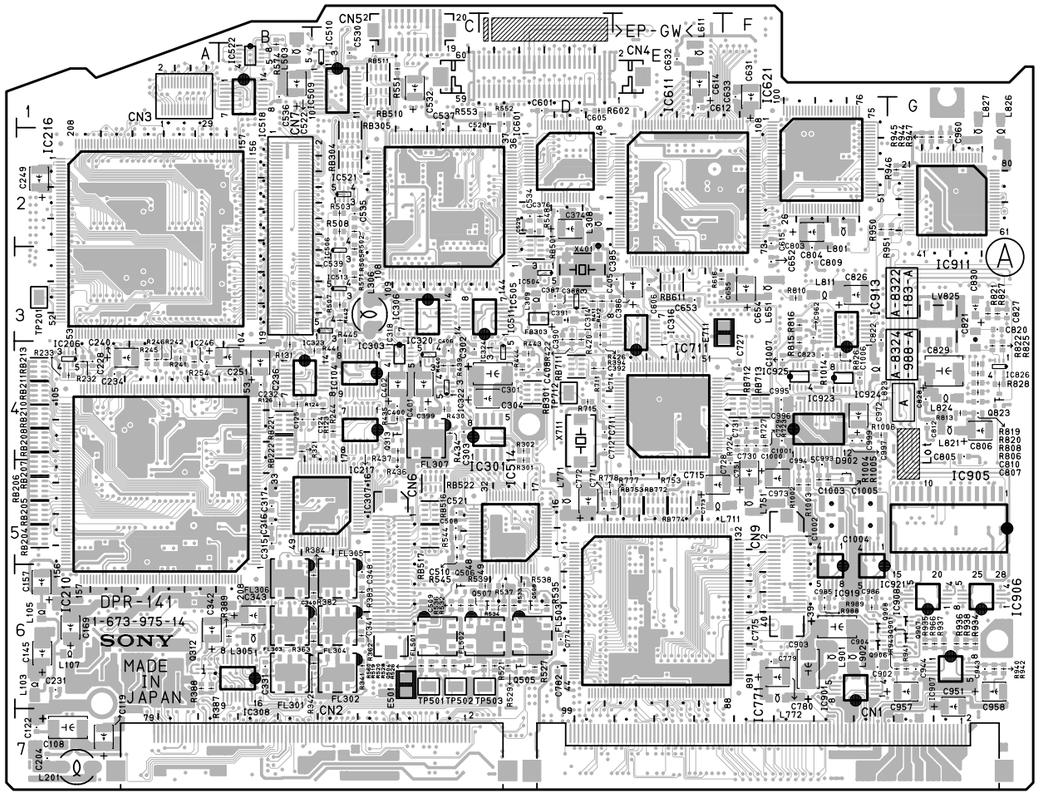

DPR-141 **-A SIDE-**
SUFFIX: -14

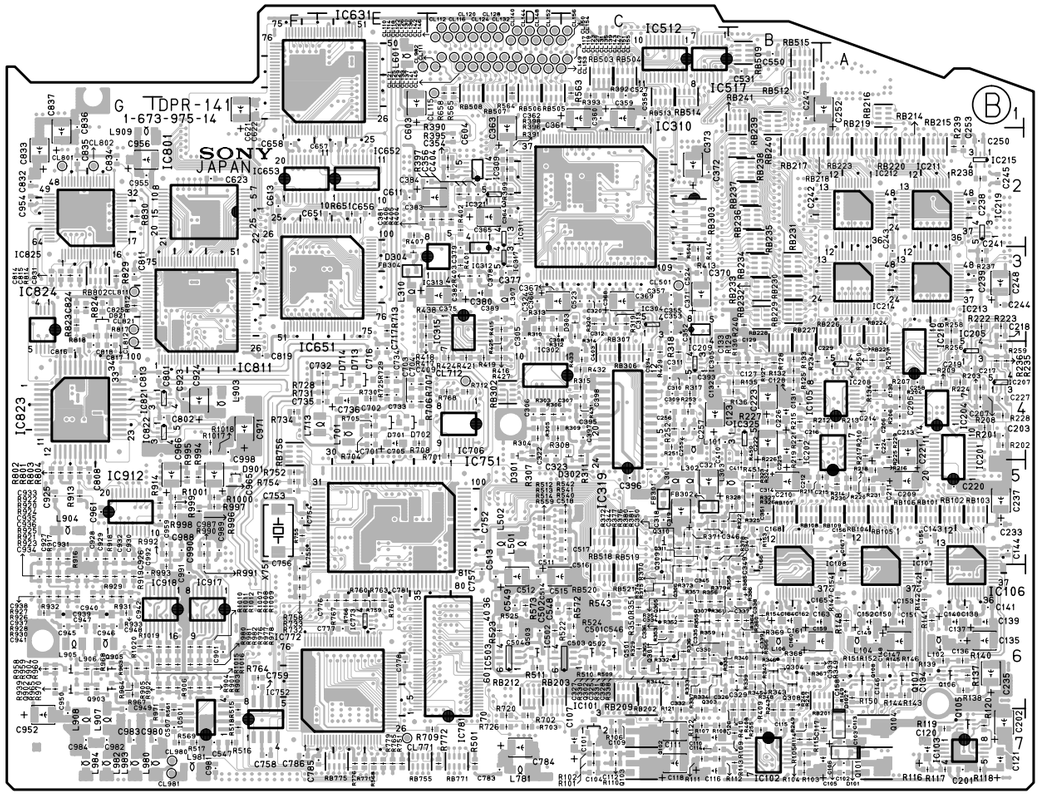

DPR-141 **-B SIDE-**
SUFFIX: -14

DPR-141 **SUFFIX: -11**

DPR-141(1-673-975-11)

C101	＊C7	C227	＊A4	C364	＊D2	C631	F1	C901	＊F6	CL137	＊D1	IC215	＊A2	L303	＊B5	R114	＊B7	R254	A4	R390	＊D2	R542	＊C5	R822	G4	RB204	A5
C102	＊A7	C228	A4	C365	＊D2	C632	E1	C902	＊G6	CL139	＊D1	IC216	A2	L305	B6	R115	＊B7	R255	＊B7	R391	＊D2	R543	＊C6	R823	＊G3	RB205	A5
C103	＊A7	C229	＊A4	C366	＊D3	C633	F1	C903	＊F6	CL140	＊D1	IC217	C4	L306	C3	R116	＊A7	R256	＊A4	R392	＊C1	R544	C5	R824	＊G3	RB206	A5
C104	＊C7	C230	＊A4	C367	＊D3	C651	＊E2	C904	＊F6	CL141	＊D1	IC218	＊A4	L307	＊D3	R117	＊A7	R257	＊A4	R393	＊C1	R545	C5	R825	G4	RB207	A5
C105	＊A7	C231	A6	C368	＊C3	C652	F3	C905	＊F6	CL142	＊D1	IC219	＊A2	L308	D2	R118	＊A7	R258	＊A3	R394	D3	R548	D2	R826	F4	RB208	A4
C106	＊A7	C232	B4	C369	＊C3	C653	E3	C906	＊F6	CL143	＊D1	IC301	C4	L309	D3	R119	＊A7	R301	D4	R395	＊D2	R550	＊B1	R827	G3	RB209	＊C6
C107	＊C7	C233	＊A5	C370	＊C3	C654	F3	C907	F6	CL144	＊D1	IC302	＊C4	L310	＊E3	R120	＊A7	R302	D4	R396	＊D2	R551	C1	R828	G4	RB210	A4
C108	A7	C234	A4	C371	＊C3	C655	E3	C908	F6	CL145	＊D1	IC303	C4	L501	＊D5	R121	＊C7	R303	＊D4	R397	＊D2	R552	D1	R829	＊G3	RB211	A4
C109	＊C7	C235	＊A6	C372	＊C2	C656	＊E2	C909	＊G6	CL146	＊D1	IC304	＊C3	L502	＊D5	R122	＊C7	R304	＊D4	R398	＊D2	R553	D1	R830	＊G2	RB212	＊D6
C110	＊C7	C236	B4	C373	＊C2	C657	＊E2	C910	＊F6	CL147	＊D1	IC305	＊C4	L503	B1	R123	C4	R305	＊D4	R399	＊D2	R559	＊D5	R901	＊F6	RB213	A4
C111	＊C7	C237	＊A5	C374	D2	C658	＊F2	C911	G6	CL148	＊D1	IC306	C3	L601	＊E1	R124	B4	R306	＊D4	R400	＊D3	R560	C6	R902	＊F6	RB214	＊A2
C112	＊C7	C238	＊A2	C375	＊D3	C701	＊E4	C912	＊F6	CL149	＊D1	IC307	C5	L611	E1	R125	＊B4	R307	＊D4	R401	＊D3	R561	＊F7	R903	＊F6	RB215	＊A2
C113	＊A7	C239	＊A3	C376	D2	C702	＊E4	C913	＊F6	CL150	＊D1	IC308	B6	L651	F3	R126	B4	R308	＊D4	R402	＊D2	R563	＊C1	R904	＊F6	RB216	＊A1
C114	＊C7	C240	A4	C377	＊D3	C703	＊E4	C914	G6	CL151	＊D1	IC309	＊D2	L701	＊E4	R127	＊B4	R309	＊D4	R403	＊D3	R564	＊D1	R905	＊F6	RB217	＊B2
C115	＊B7	C241	＊A3	C378	＊D3	C704	＊E4	C915	F5	CL152	＊D1	IC310	＊C2	L711	E5	R128	＊B4	R310	＊D3	R404	＊D2	R565	＊D1	R906	＊F6	RB218	＊B2
C116	＊C7	C242	＊B2	C379	＊D3	C705	＊E4	C916	＊F5	CL153	＊D1	IC311	＊D2	L713	＊E4	R129	＊C4	R311	＊C4	R405	＊D2	R568	＊E7	R907	F6	RB219	＊A2
C117	＊A7	C243	＊A3	C380	＊D3	C711	D4	C917	＊F5	CL154	＊D1	IC312	＊D3	L751	F5	R130	＊B4	R312	＊D3	R406	＊D2	R569	＊F7	R908	＊F6	RB220	＊A2
C118	＊C7	C244	＊A3	C381	＊E2	C712	D4	C918	＊F4	CL155	＊C1	IC313	＊D3	L771	D5	R131	B4	R313	＊D3	R407	＊E2	R571	C3	R909	＊F5	RB221	B4
C119	A7	C245	＊A2	C382	＊D3	C714	D4	C919	＊F5	CL156	＊C1	IC314	D3	L772	F6	R132	＊B4	R314	＊C3	R408	＊B7	R572	＊C6	R910	＊F4	RB222	B4
C120	＊A7	C246	A4	C383	＊D2	C715	E5	C920	＊F5	CL501	＊C3	IC315	＊D3	L781	＊D7	R133	＊B4	R315	＊C4	R409	＊B7	R573	＊D6	R911	＊F6	RB223	＊A2
C121	＊A7	C247	＊B1	C384	＊E2	C716	＊E4	C921	＊F4	CL712	＊D4	IC316	E4	L801	F2	R134	＊A4	R316	D4	R410	＊B7	R574	B1	R912	F6	RB224	＊A3
C122	A7	C248	＊A3	C385	E3	C717	＊E4	C922	＊F4	CL771	＊E7	IC317	＊D3	L811	F3	R135	＊B4	R317	＊C4	R411	D3	R575	D3	R913	＊G5	RB225	＊A3
C123	＊C4	C249	A2	C386	E3	C727	F4	C923	＊F4	CL801	＊G2	IC318	C4	L821	G4	R136	＊B4	R318	＊C4	R412	D3	R602	D1	R914	＊F5	RB226	＊A3
C124	C4	C250	＊A2	C387	D3	C728	F5	C924	＊F4	CL802	＊G2	IC319	＊C5	L823	F4	R137	＊A6	R319	＊C3	R413	＊C3	R616	E3	R915	＊F5	RB227	＊B4
C125	B4	C251	B4	C388	D3	C729	F4	C925	＊G5	CL811	＊G3	IC320	C4	L824	G4	R138	＊A6	R320	＊C3	R414	＊C3	R617	E3	R916	＊G5	RB228	＊B4
C126	＊C7	C252	＊A1	C389	＊D3	C730	F4	C926	＊G5	CL812	＊G4	IC321	＊D2	L826	G2	R139	＊A6	R321	B4	R415	＊D3	R651	＊E2	R917	＊G5	RB229	＊B3
C127	＊B4	C253	＊A2	C390	D3	C731	F4	C927	＊G5	CL821	＊G3	IC322	C4	L827	G2	R140	＊A6	R322	＊B5	R416	＊D4	R658	＊D1	R918	＊G5	RB230	＊B3
C128	＊B4	C255	＊C4	C391	D3	C732	＊E4	C928	＊G5	CL901	＊F4	IC323	C3	L901	＊F6	R141	＊A6	R323	＊C5	R417	＊E3	R701	＊D4	R919	＊G6	RB231	＊B3
C129	＊B4	C256	＊C4	C392	D4	C733	＊E4	C929	＊G5	CL902	＊F4	IC324	D4	L902	＊F6	R142	＊A6	R324	＊C5	R418	＊E3	R702	＊D7	R920	＊G6	RB232	＊B3
C130	＊A4	C257	＊C4	C393	＊C4	C734	＊E4	C930	＊G5	CL980	＊F7	IC501	＊F7	L903	＊F4	R143	＊A6	R325	＊B5	R419	＊D4	R703	＊D7	R921	＊G6	RB233	＊B3
C131	＊B4	C258	＊A4	C394	＊C4	C735	＊E4	C931	＊G5	CL981	＊F7	IC502	＊C6	L904	＊G5	R144	＊A6	R326	＊B5	R420	D3	R704	＊E4	R922	＊G6	RB234	＊B3
C132	＊C4	C301	D4	C395	＊C4	C736	＊E4	C932	＊G5	CL982	＊E1	IC503	＊D6	L905	＊G6	R145	＊A6	R327	＊B5	R421	＊D4	R705	＊E4	R923	＊G6	RB235	＊B2
C133	＊C4	C302	C4	C396	＊C5	C751	F5	C933	＊G6			IC504	D3	L906	＊G6	R146	＊A6	R328	＊B5	R422	D3	R706	＊E4	R924	＊G6	RB236	＊B2
C134	＊A6	C303	C4	C397	＊C4	C752	＊D5	C934	＊G6	CN1	F7	IC505	C2	L907	＊G7	R147	＊A6	R329	＊C6	R423	＊E4	R707	＊E4	R925	＊G6	RB237	＊B2
C135	＊A6	C304	D4	C398	＊C4	C753	＊F5	C935	＊G6	CN2	C7	IC506	C3	L908	＊G7	R148	＊A6	R330	＊C6	R424	＊D4	R708	＊E4	R926	＊G6	RB238	＊B2
C136	＊A6	C305	＊D3	C399	C4	C754	＊F5	C936	＊G6	CN3	A1	IC509	C1	L909	＊G2	R149	＊A6	R331	＊C6	R425	＊D3	R709	＊D7	R927	＊G6	RB239	＊B2
C137	＊A6	C306	＊D4	C400	C4	C755	＊F5	C937	＊G6	CN4	D1	IC510	C1	L980	＊F7	R150	＊A6	R332	＊C6	R426	D3	R711	D4	R928	＊G6	RB240	＊B1
C138	＊A6	C307	＊C4	C401	C4	C756	＊F6	C938	＊G6	CN5	C1	IC511	D3	L981	＊F7	R151	＊A6	R333	＊C6	R427	＊D4	R712	＊D4	R929	＊G6	RB241	＊B1
C139	＊A6	C308	＊D3	C402	C4	C757	＊D6	C939	＊G6	CN6	C6	IC512	＊C1	L982	＊G7	R152	＊A6	R334	＊C6	R428	＊C4	R713	＊E3	R930	＊G6	RB301	D4
C140	＊A6	C309	＊C4	C403	＊C4	C758	＊F7	C940	＊G6	CN7	B2	IC513	C3	L983	＊G7	R153	＊B5	R335	＊C6	R429	＊C4	R715	D4	R931	＊G6	RB302	＊D4
C141	＊A6	C310	＊C4	C404	＊D2	C759	＊F6	C941	＊G6	CN9	F6	IC514	D5	L984	＊G7	R154	＊B6	R336	＊C6	R430	C4	R720	＊D7	R932	＊G6	RB303	＊C2
C142	＊A6	C311	＊C4	C405	D3	C771	D5	C942	＊G6			IC517	＊C1			R155	＊B6	R337	＊C6	R431	＊C4	R723	F4	R933	＊G6	RB304	C2
C143	＊A5	C312	＊C3	C406	C4	C772	D5	C943	G6	D101	＊A7	IC518	B1	LV825	G3	R201	＊A4	R338	＊C6	R432	＊C4	R724	F4	R934	G6	RB305	C2
C144	＊A5	C313	＊C3	C407	C3	C773	E5	C944	G6	D102	＊A7	IC521	C2			R202	＊A4	R339	＊B6	R433	＊C4	R725	＊E4	R935	G6	RB306	＊C4
C145	A6	C314	＊B5	C408	D4	C774	D6	C945	＊G6	D301	＊D4	IC522	B1	Q101	＊A7	R203	＊A4	R340	＊B6	R434	C4	R726	＊D7	R936	G6	RB307	＊C4
C146	＊A6	C315	B5	C501	＊C6	C775	F6	C946	＊G6	D302	＊C4	IC601	D2	Q102	＊C7	R204	＊A4	R341	C6	R435	C4	R727	F4	R937	G6	RB501	D3
C147	＊A6	C316	B5	C502	＊D6	C776	＊E6	C947	＊G6	D303	＊C3	IC611	E2	Q103	＊C7	R206	＊A4	R342	C6	R436	C5	R728	＊E4	R938	G6	RB503	＊C1
C148	＊A6	C317	B5	C503	＊C6	C777	＊E6	C948	＊G6	D304	＊E3	IC621	F2	Q104	＊A7	R207	＊A4	R343	＊B6	R437	C4	R729	＊E4	R939	＊G6	RB504	＊C1
C149	＊A6	C318	＊C5	C504	＊D6	C778	＊E6	C949	＊G7	D701	＊E4	IC631	＊E1	Q105	＊A7	R208	＊A4	R344	＊C6	R438	＊E3	R730	＊E4	R940	G6	RB505	＊D1
C150	＊A6	C319	＊C5	C507	＊F7	C779	F6	C950	＊G7	D702	＊E4	IC651	＊E3	Q106	＊A6	R209	＊A4	R345	＊B6	R439	C4	R731	＊E4	R941	G6	RB506	＊D1
C151	＊A6	C320	＊C3	C508	C5	C780	F6	C951	G6	D713	＊E4	IC652	＊E2	Q107	＊A6	R210	＊A4	R346	＊B6	R440	C4	R732	＊F6	R942	G6	RB507	＊D1
C152	＊A6	C321	＊C5	C509	C6	C781	＊E6	C952	＊G7	D714	＊E4	IC653	＊F2	Q108	＊A6	R211	＊A5	R347	＊B6	R441	C4	R733	＊F6	R943	G6	RB508	＊D1
C153	＊A6	C322	＊D4	C510	C5	C782	D6	C954	＊G2	D821	＊G3	IC706	＊D4	Q301	＊C6	R212	＊A4	R348	＊B6	R442	C3	R734	＊F4	R944	G2	RB509	＊B1
C154	＊A6	C323	＊D4	C511	＊D5	C783	＊D7	C955	＊G2			IC707	＊D4	Q302	＊C6	R213	＊A4	R349	＊B6	R443	D4	R751	＊E7	R945	G2	RB510	C1
C155	＊A5	C324	＊D3	C512	＊D6	C784	＊D7	C956	＊G2	E501	C6	IC711	E4	Q303	＊C6	R214	＊A5	R350	＊C6	R444	D4	R752	＊F5	R946	G2	RB511	C1
C156	＊A5	C325	＊C6	C513	＊D6	C785	＊E7	C957	G6	E711	F3	IC751	＊E5	Q304	＊B6	R215	＊B4	R351	＊C6	R501	＊D7	R753	E5	R947	G2	RB512	＊B1
C157	A6	C326	＊C6	C514	＊D6	C786	＊F7	C958	G6			IC752	＊F7	Q305	＊C6	R216	＊A5	R352	＊C6	R502	C2	R754	＊F5	R948	F4	RB513	＊C1
C158	＊A6	C327	＊C6	C515	＊D6	C801	＊F4	C959	＊F5	FB301	＊C5	IC771	E6	Q306	＊C6	R217	＊A4	R353	＊C6	R503	C2	R755	＊F5	R949	G2	RB514	＊C1
C159	＊B6	C328	＊C6	C516	＊C5	C802	＊F4	C960	G2	FB302	＊C5	IC772	＊E6	Q307	＊C6	R218	＊A5	R354	＊C6	R504	＊C3	R758	＊F6	R950	F2	RB515	＊B1
C160	＊B6	C329	＊B6	C517	＊C5	C803	F2	C961	＊G5	FB303	D3	IC773	＊E6	Q308	＊B6	R219	＊B4	R355	＊C6	R505	C3	R759	＊E6	R951	G2	RB516	C5
C161	＊B6	C330	＊C6	C518	＊C5	C804	F3	C962	F3	FB304	＊E3	IC781	＊D7	Q309	＊C5	R220	＊A5	R356	＊C6	R506	C2	R760	＊E6	R952	G2	RB517	C5
C162	＊B6	C331	B6	C521	C5	C805	G4	C963	＊F4			IC801	＊F2	Q310	＊C5	R221	＊B4	R357	＊C6	R507	C3	R761	＊E6	R953	＊F6	RB518	＊C5
C163	＊B6	C332	＊C6	C522	B1	C806	G4	C964	＊F4	FL301	B6	IC811	＊F3	Q311	＊C6	R222	＊A3	R358	＊C6	R508	C2	R763	＊E6	R954	＊F6	RB519	＊C5
C164	＊B6	C333	＊B6	C523	＊C3	C807	G4	C980	＊F7	FL302	C6	IC821	＊F4	Q312	A6	R223	＊A3	R359	＊C6	R509	＊C6	R764	＊F6	R955	＊F6	RB520	＊C6
C165	＊B6	C334	＊C6	C524	＊C3	C808	＊G5	C981	＊F7	FL303	B6	IC822	＊F4	Q313	C4	R224	＊A4	R360	＊B6	R510	＊C6	R765	＊E7	R957	＊F6	RB521	＊C6
C166	＊B6	C335	＊C6	C527	＊C1	C809	F3	C982	＊G7	FL304	C6	IC823	＊G4	Q501	＊C6	R225	＊A4	R361	＊C6	R511	＊D6	R766	＊E6	R958	＊G6	RB522	C5
C167	＊A5	C336	＊C6	C528	D1	C810	G4	C983	＊G7	FL305	C6	IC824	＊G3	Q502	＊C6	R226	＊B5	R362	C6	R512	＊D5	R767	＊E6	R959	＊G6	RB611	E3
C168	＊B5	C337	＊C6	C529	D2	C811	＊G3	C984	＊G7	FL306	B6	IC825	＊G2	Q503	＊D6	R227	＊B4	R363	C6	R513	＊D5	R771	＊E7	R960	＊G6	RB711	D4
C169	A6	C338	＊B6	C530	C1	C812	G4			FL307	C4	IC826	G4	Q504	C6	R228	＊A4	R364	＊B6	R514	＊D5	R772	＊D7	R962	＊F5	RB712	F4
C201	＊A7	C339	＊B6	C531	＊B1	C813	＊G4	CL110	＊D1	FL501	C6	IC901	F6	Q505	D6	R229	＊A4	R365	＊C6	R515	＊F7	R776	＊E7	R963	＊G6	RB713	F4
C202	＊A7	C340	C6	C532	C1	C814	＊G3	CL111	＊D1	FL502	D6	IC903	F6	Q506	C6	R230	＊A5	R366	＊B6	R516	＊F7	R777	E5	R964	＊G6	RB753	E5
C203	＊A4	C341	C6	C534	D2	C815	＊G3	CL112	＊D1	FL503	D6	IC904	F5	Q507	D6	R231	＊A5	R367	＊B6	R517	＊F7	R778	D5	R965	＊G6	RB755	＊E7
C204	A7	C342	A6	C535	C2	C816	＊G4	CL114	＊D1			IC905	G5	Q508	D6	R232	A4	R368	＊B6	R518	＊F7	R779	＊E7	R966	G6	RB756	＊F4
C205	＊A4	C343	B6	C536	B1	C817	＊G4	CL115	＊D1	IC101	＊C7	IC906	G6	Q823	G4	R233	A4	R369	＊B6	R519	C6	R801	＊G5	R967	＊G6	RB771	＊D7
C206	＊A4	C344	＊C5	C537	C1	C818	＊G4	CL116	＊D1	IC102	＊B7	IC907	G6	Q901	＊F5	R234	＊B4	R370	＊C6	R520	C6	R802	＊G5	R968	＊G6	RB772	E5
C207	＊A4	C345	＊C6	C539	C3	C819	＊F4	CL117	＊D1	IC103	＊A7	IC908	G6	Q902	＊G6	R235	＊A4	R371	＊C5	R521	D6	R803	＊G5	R969	＊F5	RB774	E5
C209	＊A5	C346	＊C5	C546	＊C6	C820	G3	CL118	＊D1	IC104	B4	IC909	＊F5	Q903	＊G6	R236	＊A4	R372	＊C5	R522	＊D6	R804	＊G5	R970	＊G6	RB775	＊E7
C210	＊B5	C347	＊C6	C547	＊F7	C821	G3	CL119	＊D1	IC105	＊A4	IC910	＊F5	Q904	＊G6	R237	＊A3	R373	＊C6	R523	＊D6	R805	＊G5	R971	＊F7	RB802	＊G3
C211	＊A5	C348	C6	C548	＊D6	C822	F3	CL120	＊D1	IC106	＊A6	IC911	G2	Q905	＊G6	R238	＊A2	R374	＊C6	R524	＊C6	R806	G4	R972	＊F6		
C212	＊B5	C349	＊B5	C549	＊D6	C823	F4	CL121	＊D1	IC107	＊A6	IC912	＊G5	Q906	＊F5	R239	＊A2	R375	＊C6	R525	＊D6	R807	F3	R974	＊F5	TP201	A3
C213	＊A4	C350	＊B5	C550	＊B1	C824	＊G3	CL122	＊D1	IC108	＊B6	IC913	F4			R240	＊B3	R376	＊C5	R526	D6	R808	G4	R975	＊F6	TP501	C6
C214	＊A4	C351	＊B5	C601	D1	C825	＊G3	CL123	＊D1	IC201	＊A5	IC915	＊F6	R101	＊C7	R241	A4	R377	＊C5	R527	D6	R809	F3			TP502	C6
C215	＊A5	C352	＊C3	C603	＊E1	C826	F3	CL124	＊D1	IC202	＊A5	IC916	＊F6	R102	＊C7	R242	A4	R378	＊C6	R528	C6	R810	F3	RB101	＊A5	TP503	D6
C216	＊B4	C353	＊C3	C604	＊D2	C827	G3	CL125	＊D1	IC204	＊A4			R103	＊B7	R243	＊B7	R379	＊C6	R529	D6	R811	F3	RB102	＊A5	TP712	D4
C217	＊A4	C354	＊D2	C605	D1	C828	G4	CL126	＊D1	IC205	＊A4	L101	＊C4	R104	＊B7	R244	C4	R380	＊C5	R532	C6	R812	＊G3	RB103	＊A5		
C218	＊A3	C355	＊C3	C606	E3	C829	G4	CL127	＊D1	IC206	A4	L102	＊A6	R105	＊B7	R245	A4	R381	＊C5	R533	D6	R813	G4	RB104	＊A5	X401	D3
C219	＊A4	C356	＊D2	C611	＊E2	C830	G3	CL128	＊D1	IC207	＊A4	L103	A6	R106	＊C7	R246	A4	R382	C6	R534	D6	R814	＊G3	RB105	＊A5	X711	D4
C220	＊A5	C357	＊C3	C612	E1	C831	＊G3	CL129	＊D1	IC208	＊A4	L104	＊A6	R107	＊C7	R247	＊B7	R383	C6	R535	D6	R815	F4	RB106	＊A5	X751	＊F5
C221	＊A4	C358	＊C1	C613	＊F2	C832	＊G2	CL130	＊D1	IC209	＊C3	L105	A6	R108	＊C7	R248	＊B7	R384	C6	R536	C6	R816	F3	RB107	＊B5		
C222	＊B4	C359	＊C1	C614	E1	C833	＊G2	CL131	＊D1	IC210	A5	L106	＊B6	R109	＊B7	R249	＊B7	R385	＊B6	R537	D6	R817	＊G3	RB108	＊B5	＊: B SIDE	
C223	＊B4	C360	＊C1	C615	F2	C834	＊G2	CL132	＊D1	IC211	＊A2	L107	A6	R110	＊C7	R250	＊A4	R386	＊B6	R538	D6	R818	＊G3	RB109	＊A5		
C224	＊A4	C361	＊C1	C621	＊F1	C835	＊G2	CL133	＊D1	IC212	＊A2	L201	A7	R111	＊C7	R251	＊C4	R387	A6	R539	D6	R819	G4	RB201	＊A6		
C225	＊B4	C362	＊D2	C622	＊F1	C836	＊G1	CL135	＊D1	IC213	＊A3	L301	＊C5	R112	＊C7	R252	＊C4	R388	A6	R540	＊C5	R820	G4	RB202	＊C6		
C226	＊B4	C363	＊D2	C623	＊F2	C837	＊G2	CL136	＊D1	IC214	＊A3	L302	＊C5	R113	＊B7	R253	＊C4	R389	B6	R541	＊C5	R821	G3	RB203	＊D6		

5-10 (a)

DPR-141
SUFFIX: -11

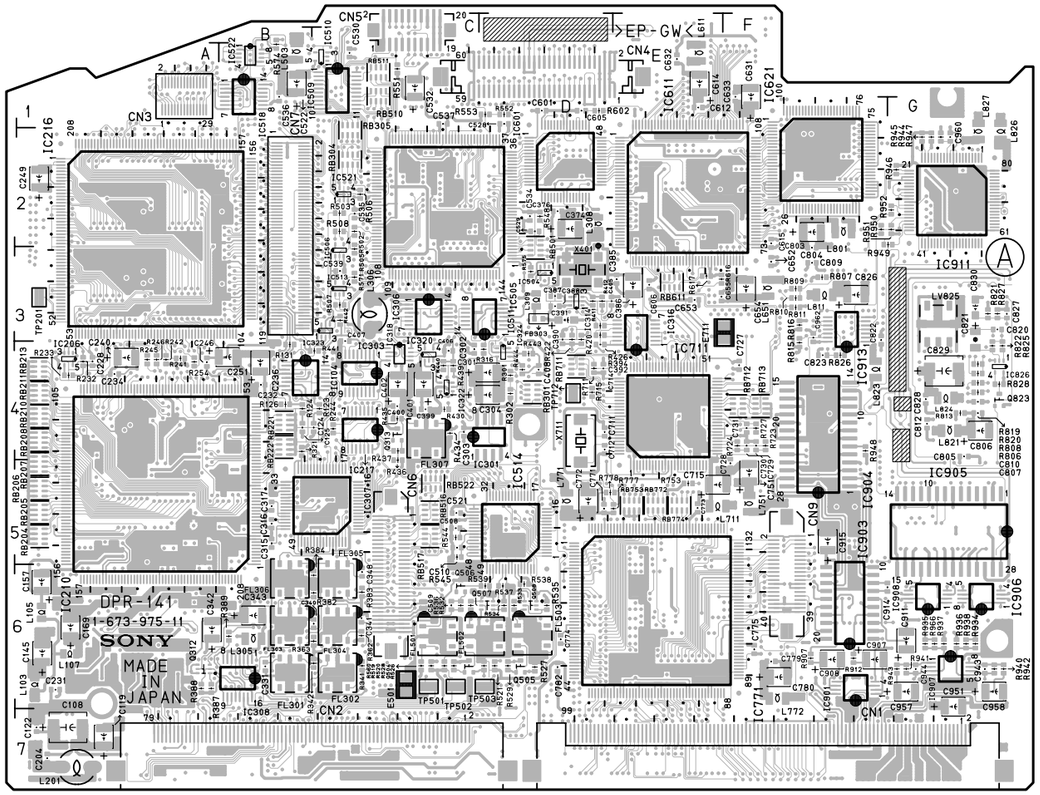

DPR-141 -A SIDE-
SUFFIX: -11

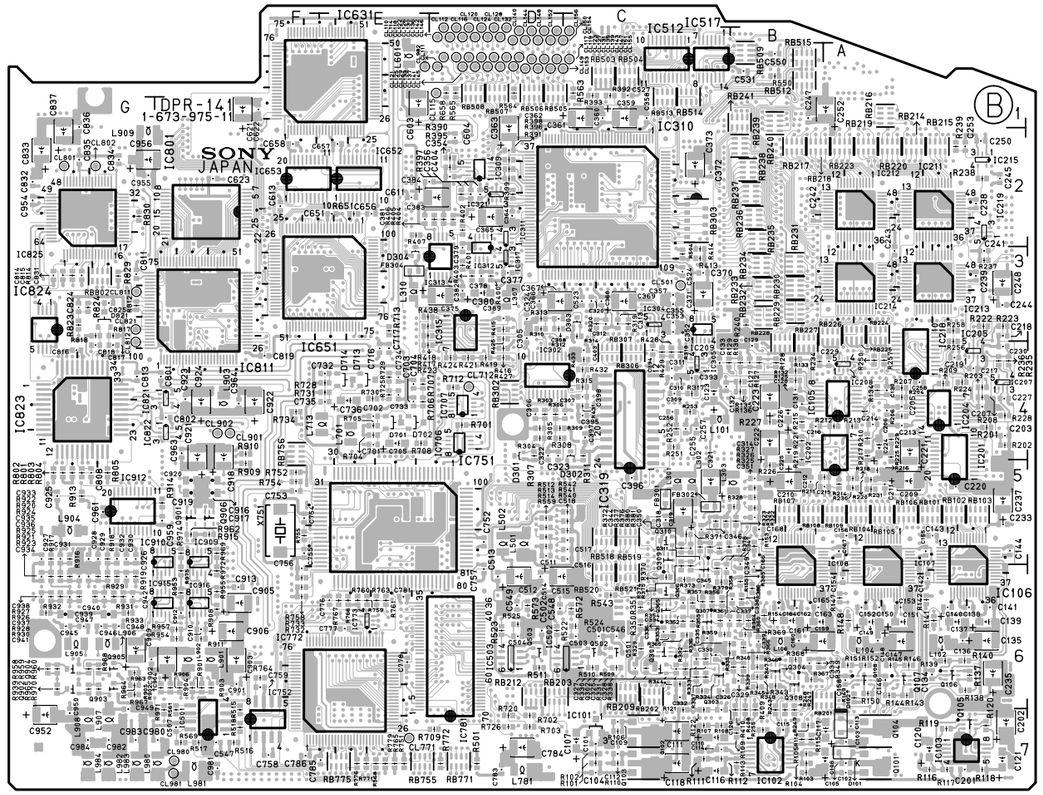

DPR-141 -B SIDE-
SUFFIX: -11

ES-26 (1-673-964-12)

C101	＊G5	C193	＊E2	C627	＊D3	C847	B2	IC401	F4	Q104	＊D3	Q801	＊A1	R177	＊C1	R269	＊F2	R402	＊F4	R494	E5	R628	＊C4	R812	＊A1	R905	＊B2
C102	＊F5	C194	＊E2	C628	＊D3	C848	＊B3	IC402	F4	Q105	＊D3	Q802	＊A1	R178	D1	R270	＊F2	R403	＊F4	R495	E5	R629	＊C4	R813	＊A1	R906	＊B2
C103	＊F5	C195	＊E2	C650	C5	C849	＊B3	IC403	E4	Q106	＊C3	Q803	＊A1	R179	＊D1	R271	＊F2	R404	＊F4	R496	＊B5	R630	＊C4	R814	＊A1	R907	＊B2
C104	＊G5	C196	D1	C651	C4	C850	B3	IC404	F3	Q107	＊C3	Q804	＊A1	R180	＊D1	R272	＊F2	R405	＊F4	R497	＊B5	R631	＊C3	R815	＊A1	R908	＊B2
C105	＊G5	C197	＊E1	C652	＊C5	C851	＊B3	IC405	E4	Q109	＊C2	Q805	＊B1	R181	＊D1	R273	＊F2	R406	＊F4	R498	＊A5	R632	＊C4	R816	＊B1	R909	＊B2
C106	＊G5	C198	＊D1	C653	＊C4	C852	＊B3	IC406	E4	Q110	＊C3	Q806	＊A1	R182	＊D1	R274	＊F2	R407	＊F4	R499	＊A5	R633	＊D4	R817	＊B1	R910	＊B2
C107	G5	C199	＊D1	C654	＊C5	C853	＊B3	IC407	E4	Q111	＊B2	Q807	A2	R183	＊D1	R275	＊F2	R408	＊F4	R500	＊A5	R634	D5	R818	＊B1	R911	＊B2
C108	＊F4	C200	＊D1	C655	D5	C854	＊B3	IC408	E4	Q112	＊C1	Q808	A1	R184	＊D1	R276	＊F2	R409	＊F4	R501	＊A5	R635	D5	R819	B1	R912	＊B2
C109	＊G4	C201	＊D1	C656	D5	C855	B3	IC409	F4	Q113	＊C2	Q809	＊A2	R185	＊D1	R277	＊F2	R410	＊F4	R502	＊A5	R636	＊D5	R820	B1	R913	＊B2
C110	＊F4	C202	＊D1	C657	D5	C856	＊B3	IC410	A5	Q114	＊C1	Q810	＊A3	R186	＊D1	R278	＊E2	R411	＊F4	R503	＊A4	R637	＊E5	R821	＊B1	R914	B4
C111	＊G4	C203	＊E1	C658	D5	C857	＊B2	IC411	B5	Q115	＊C1	Q811	＊B2	R187	＊D1	R279	F2	R412	＊F3	R504	＊A5	R638	＊E5	R822	＊A2	R915	＊A4
C112	＊F4	C204	D1	C659	C5	C858	＊B2	IC412	B5	Q116	＊D1			R188	＊D1	R280	F2	R413	＊F3	R505	＊A5	R639	＊E5	R823	＊A2	R916	＊A2
C113	＊G4	C205	E1	C660	C5	C859	B2	IC413	B5	Q117	＊D1	R101	＊G5	R189	＊D1	R281	＊F2	R414	F3	R506	＊A5	R640	D5	R824	＊A2	R917	＊A3
C114	＊D3	C206	D1	C661	＊C5	C860	＊B2	IC414	F3	Q118	＊D2	R102	＊G5	R190	＊D1	R282	＊F2	R415	F3	R507	＊A5	R641	D5	R825	＊A1	R918	＊A3
C115	D2	C207	＊E2	C662	＊D5	C861	＊B2	IC415	F3	Q119	＊D2	R103	＊G5	R191	＊D1	R283	＊F2	R416	＊F3	R508	＊A5	R642	＊D4	R826	＊A2	R919	＊B3
C116	E2	C208	＊E1	C663	D5	C862	＊B2	IC601	C4	Q120	＊C2	R104	＊G5	R192	＊D2	R284	＊F2	R417	＊F3	R509	＊A5	R643	＊D4	R827	＊A2	R920	＊B3
C117	E2	C209	＊E2	C664	＊D5	C863	＊B2	IC602	C4	Q121	＊C2	R105	＊G5	R193	＊D2	R285	＊E2	R418	F3	R510	＊A4	R644	＊D4	R828	＊A2	R921	B4
C118	＊E2	C210	＊E1	C665	＊D5	C864	＊B2	IC603	C4	Q122	＊C2	R106	＊D3	R194	＊D2	R286	＊E2	R419	F3	R511	＊A5	R645	＊D4	R829	A1	R922	＊A3
C119	＊D2	C211	＊D2	C680	C5	C865	＊B2	IC604	D4	Q123	＊C2	R107	＊G4	R195	＊D2	R287	E2	R420	F3	R512	＊A5	R650	＊C4	R830	A1	R923	＊B4
C120	＊E2	C212	E5	C681	C5	C866	B3	IC605	D3	Q124	＊B1	R108	＊G4	R196	＊D2	R288	＊E2	R421	F3	R513	＊A5	R651	＊C4	R831	＊A1	R924	＊A3
C121	＊D3	C213	E5	C682	C5	C867	＊B2	IC606	C5	Q125	＊C1	R109	＊G4	R197	＊D2	R289	＊E2	R422	＊F3	R514	＊A5	R652	＊C4	R832	＊B1	R925	A4
C122	＊D3	C214	＊D4	C683	＊C5	C868	＊B3	IC607	D5	Q126	＊C1	R110	＊G4	R198	C2	R290	＊E2	R423	F3	R515	＊A5	R653	C4	R833	＊A2	R926	＊A4
C123	＊E3	C215	＊D3	C684	C5	C869	A4	IC608	C5	Q127	G3	R111	＊G4	R199	C2	R291	＊E2	R424	F3	R516	＊A5	R654	＊C4	R834	＊B2	R927	＊A2
C124	＊F3	C216	D3	C685	D4	C870	＊A4	IC609	C4	Q128	F3	R112	＊E3	R200	C2	R292	＊E2	R425	＊F3	R517	＊A4	R655	C4	R835	＊B2	R928	＊A2
C125	＊D3	C217	＊E2	C686	D4	C871	A4	IC610	D4	Q128	G3	R113	D2	R201	C2	R293	＊E2	R426	＊E3	R518	＊A5	R656	C4	R836	＊A2	R929	＊A2
C126	D3	C218	＊D1	C687	C4			IC701	C4	Q129	＊G2	R114	＊D2	R202	＊C2	R294	＊D1	R427	＊E3	R519	＊A5	R657	＊C5	R837	＊A2	R930	A4
C127	D2	C219	＊G4	C688	C5	CL001	＊E5	IC702	C4	Q130	＊F2	R115	D2	R203	＊C2	R295	＊D1	R428	F3	R520	＊A5	R658	＊C5	R838	＊A2	R931	＊A2
C128	＊D3	C220	G4	C689	D4			IC801	＊B1	Q131	F2	R116	＊D2	R204	＊C2	R296	＊D1	R429	F3	R521	＊A4	R659	＊C5	R839	＊A2	R932	B4
C129	D3	C221	F4	C690	＊D4	CN101	E5	IC802	B2	Q132	＊F2	R117	＊E2	R205	＊C2	R297	＊E1	R430	F3	R522	＊A4	R660	＊C5	R840	＊A2	R933	B4
C130	＊D3	C221	G4	C691	＊C4			IC803	B4	Q133	F2	R118	＊E2	R206	＊C2	R298	＊D1	R431	F3	R523	＊A5	R661	＊C5	R841	＊A2	R934	＊B4
C131	＊D2	C401	F4	C692	C4	CP801	A3	IC804	A2	Q134	＊F2	R119	＊D2	R207	＊C2	R299	＊D1	R432	F3	R524	＊A4	R662	＊C5	R842	＊A2	R935	B4
C132	C2	C402	F4	C693	＊D4			IC805	A2	Q135	＊F2	R119	＊E2	R208	＊C2	R300	＊D1	R433	＊E3	R525	＊A5	R663	＊C5	R843	A2		
C133	C3	C403	＊F4	C694	＊D4	D101	＊F5	IC806	A2	Q136	＊F2	R120	＊E3	R209	＊C2	R301	＊E1	R434	＊E3	R526	＊A5	R664	＊C5	R844	＊A2	RB101	＊D3
C134	＊C2	C404	F4	C695	＊D4	D102	＊G4	IC807	A3	Q137	＊F2	R121	＊D3	R210	＊C2	R302	＊E1	R435	＊E3	R527	＊A5	R665	C5	R845	＊A2	RB102	＊E3
C135	＊C3	C405	F4	C696	＊D4	D103	＊G4	IC808	A4	Q138	＊F2	R121	＊E3	R211	＊C2	R303	＊F2	R436	＊E3	R528	＊B5	R666	＊C5	R846	＊A2	RB103	＊E3
C136	＊C3	C406	＊F3	C697	＊D4	D104	＊G3	IC809	A4	Q139	＊E2	R122	＊D3	R212	＊C2	R304	＊F1	R437	F3	R529	＊B5	R667	＊D5	R847	＊A2	RB104	＊D3
C137	＊C3	C407	F3	C698	＊D4	D105	＊D1	IC810	A4	Q140	＊E2	R123	＊D3	R213	＊C2	R305	＊F1	R438	F3	R530	＊B5	R668	＊D5	R848	＊A2	RB601	D4
C138	＊C3	C408	F3	C701	C3	D106	＊E1	IC811	A4	Q141	E2	R124	＊E3	R214	＊C2	R306	＊F1	R439	＊F3	R531	＊B5	R669	＊D5	R849	＊A2		
C139	＊C3	C409	＊E3	C702	D4	D401	＊E3	IC812	A4	Q142	E2	R125	＊E3	R215	＊C2	R307	＊F1	R440	＊F3	R532	＊B5	R670	＊D5	R850	＊A3	RV101	D1
C140	＊B1	C410	＊E3	C703	＊C3	D402	＊E4	IC813	B3	Q143	＊D1	R126	＊D3	R216	＊C2	R308	＊E1	R441	＊F3	R533	＊B5	R671	＊D5	R851	＊A3	RV102	D1
C141	＊B1	C411	＊E3	C704	＊C4	D403	＊E4	IC814	B3	Q144	D1	R127	＊D3	R217	＊B1	R309	＊E1	R442	＊E3	R534	＊B5	R672	＊D5	R852	＊A3	RV103	C1
C142	＊C2	C412	＊E4	C705	＊C4	D404	＊E4	IC815	B3	Q145	＊E1	R128	＊D3	R218	＊B1	R310	＊E1	R443	E3	R535	＊B4	R673	＊C5	R853	＊A3	RV104	D1
C143	＊C2	C413	E4	C706	＊C4	D405	＊A5	IC816	B3	Q146	＊F1	R129	＊D2	R219	＊B1	R311	＊E1	R444	E3	R536	＊B5	R674	＊D5	R854	＊A3	RV105	E1
C144	C2	C414	＊E4	C707	＊C5	D406	＊A5	IC817	B2	Q147	＊E1	R130	＊D3	R220	＊C1	R312	＊E1	R445	＊E3	R537	＊B5	R678	＊D5	R855	＊A3		
C145	C1	C415	＊E4	C708	＊B5	D407	＊F3	IC818	B2	Q148	E1	R131	＊D3	R221	＊C1	R313	＊E1	R446	＊E3	R538	B5	R680	＊B5	R856	＊A3	S401	A5
C146	＊C1	C416	＊E4	C708	＊C5	D701	＊D4	IC819	B2	Q149	＊E1	R132	C3	R222	＊C1	R314	E1	R447	E3	R539	＊B5	R681	＊B5	R857	＊A3	TP801	B3
C147	＊C2	C417	E4	C709	＊D5	D702	＊C3	IC820	B2	Q150	＊E2	R133	C3	R223	＊C1	R315	E1	R448	＊E3	R540	＊B5	R682	C5	R858	＊A3		
C148	C2	C418	＊E4	C710	＊D4	D703	＊C4	IC821	＊B3	Q151	＊E2	R134	C3	R224	＊C1	R316	E1	R449	＊E3	R541	＊B5	R683	＊B5	R859	＊A3		
C149	C1	C419	＊E4	C801	B1	D801	＊A1	IC822	B3	Q152	＊D1	R135	C3	R225	＊C1	R317	＊E2	R450	＊E3	R542	＊B5	R684	＊B5	R860	＊A3	＊:B SIDE	
C150	＊C1	C420	＊E4	C802	B1	D802	＊A2	IC823	B3	Q153	＊D2	R136	＊C3	R226	＊C1	R318	＊E1	R451	＊E3	R543	＊B5	R685	C5	R861	＊A3		
C151	＊C1	C421	＊F5	C803	＊A1	D803	＊A3	IC824	B4	Q154	＊E2	R137	＊C3	R227	＊C1	R319	＊E2	R452	＊E3	R544	＊B5	R686	＊D4	R862	＊A3		
C152	＊C1	C422	＊F4	C804	A1	D804	＊B4	IC825	A4	Q155	＊E2	R138	＊C3	R228	＊G3	R320	＊E2	R453	E3	R545	＊B5	R687	＊D4	R863	＊A3		
C153	C1	C423	＊A5	C805	A1			IC826	A4	Q156	＊D1	R139	＊C3	R229	＊G3	R321	＊E1	R454	＊E3	R546	＊B5	R688	＊D4	R864	＊A3		
C154	＊D1	C424	A5	C806	＊A1	DL101	E1	IC827	A2	Q401	＊F4	R140	＊C3	R230	＊G3	R322	＊E2	R455	＊E3	R547	＊B5	R689	＊D4	R865	＊A4		
C155	D1	C425	A5	C807	＊A1	DL102	F1			Q402	＊F4	R141	＊C3	R231	＊G3	R323	＊E2	R456	＊E4	R548	E3	R690	＊D4	R866	＊A3		
C156	＊C1	C426	＊A5	C808	B1	DL401	E3	L101	B1	Q403	＊F4	R142	＊C3	R232	＊F3	R324	＊E2	R456	＊F4	R549	E3	R691	＊D5	R867	＊A3		
C156	＊D1	C427	＊A4	C809	B1	DL402	E4	L102	C1	Q404	＊F4	R143	＊C3	R233	＊G3	R325	＊E1	R457	E4	R550	＊E3	R692	＊D5	R868	＊A4		
C157	＊D1	C428	＊B5	C810	＊B1			L103	C2	Q405	＊F4	R144	＊C3	R234	＊G3	R326	＊E1	R458	＊E4	R551	＊E3	R701	＊D4	R869	＊A3		
C158	D2	C429	＊B5	C811	＊A1	E601	C3	L104	C1	Q406	＊F3	R145	＊C3	R235	＊G4	R327	D2	R459	＊E4	R552	E2	R702	＊D3	R870	A3		
C159	D2	C430	B5	C812	A2	E801	B3	L105	B1	Q407	＊F3	R146	＊C3	R236	＊G4	R328	D2	R460	＊E4	R553	＊F2	R703	＊D3	R871	＊A4		
C160	＊D2	C431	＊E4	C813	A1			L106	E2	Q408	＊F3	R147	＊C2	R237	＊G4	R329	＊E2	R461	＊E4	R554	＊F3	R704	＊D4	R872	A4		
C161	＊D2	C432	E3	C814	＊A1	FL101	D1	L107	E1	Q410	＊F3	R148	＊C3	R238	＊G4	R330	D2	R462	＊E4	R555	＊F3	R705	＊D3	R873	＊A4		
C162	D2	C433	E2	C815	＊A2	FL102	D1	L108	D1	Q411	＊F3	R149	＊C3	R239	＊F3	R331	D2	R463	＊E4	R556	F3	R706	＊D4	R874	＊A4		
C163	＊D2	C434	E2	C816	A1	FL401	F4	L109	D2	Q412	＊E3	R150	＊C3	R240	＊G3	R332	D2	R464	＊E4	R557	＊F3	R707	＊C3	R875	＊A4		
C164	＊D2	C435	F2	C817	A1	FL402	F5	L110	D3	Q413	＊E3	R151	B2	R241	＊G4	R333	D2	R465	＊E4	R558	＊F3	R708	＊C4	R876	＊A4		
C165	C2	C436	＊F3	C818	＊B1	FL403	F5	L401	＊F3	Q414	＊E3	R152	B2	R242	＊F4	R334	D2	R466	＊E4	R559	＊F4	R709	＊C4	R877	A4		
C166	C2	C437	＊F3	C819	B1	FL404	A5	L601	B4	Q415	＊E4	R153	＊B1	R242	＊G4	R335	＊D2	R467	＊E4	R601	＊B4	R710	＊D4	R878	＊A4		
C167	＊C2	C601	＊B4	C820	＊B2	FL405	A5	L602	D4	Q416	＊E4	R154	＊C1	R243	＊G2	R336	＊D2	R468	＊E5	R602	C5	R711	＊D4	R879	＊E5		
C168	＊C2	C602	＊C4	C821	A2	FL406	A5	L603	C3	Q417	＊E4	R155	＊C1	R244	＊G2	R337	＊D2	R469	＊E4	R603	B5	R712	＊C4	R880	＊A4		
C169	＊C2	C603	＊B4	C822	＊A2	FL407	B5	L650	C4	Q418	＊A5	R156	＊C1	R245	＊G2	R338	＊D2	R470	＊E4	R604	＊C4	R713	＊D4	R881	＊F5		
C170	＊C2	C604	＊C4	C823	＊A2	FL408	B5	L651	＊C5	Q419	A5	R157	C1	R246	＊G2	R339	＊D2	R471	＊E4	R605	＊C4	R714	＊C4	R882	＊B3		
C171	＊C2	C605	＊C4	C824	A2	FL601	C3	L652	C5	Q420	A5	R158	＊C1	R247	＊F2	R340	＊D2	R472	＊E4	R606	＊C4	R715	＊C4	R883	＊B3		
C172	＊C2	C606	＊C4	C825	＊B4			L653	C5	Q421	＊A4	R159	＊C2	R248	＊F2	R341	＊E2	R473	E4	R607	＊C4	R716	C3	R884	＊B3		
C173	＊B1	C607	＊C4	C826	A2	IC101	G5	L680	D4	Q422	＊A4	R160	＊C2	R249	＊F2	R342	E2	R474	＊E4	R608	C4	R717	C3	R885	＊B3		
C174	＊B1	C608	＊B4	C827	＊A2	IC102	G4	L681	D4	Q423	＊A4	R161	＊C2	R250	＊F2	R343	E5	R475	＊E4	R609	＊B4	R718	C3	R886	＊B3		
C175	＊C1	C609	＊C4	C828	＊A2	IC103	D3	L701	C3	Q424	＊B5	R162	＊C1	R251	＊F2	R344	E5	R476	＊E4	R610	＊C4	R719	C3	R887	＊B3		
C176	＊C1	C610	C4	C829	＊A2	IC104	D3	L702	C4	Q426	＊B5	R163	＊C1	R252	F2	R346	＊D4	R477	＊E4	R611	＊C4	R720	＊D4	R888	＊B3		
C177	C1	C611	＊C4	C830	A2	IC105	D2	L801	＊B1	Q427	＊B5	R164	＊C1	R253	＊F2	R347	＊E2	R478	＊E4	R612	＊C4	R721	＊D4	R889	＊B3		
C178	＊F3	C612	＊C3	C832	＊A3	IC106	E3	L802	＊B1	Q428	＊B5	R165	＊C1	R254	＊F2	R348	＊E2	R479	＊E4	R613	C4	R722	＊D4	R890	＊B3		
C179	＊G3	C613	C4	C833	＊A3	IC107	C3	L803	A1	Q429	＊E4	R166	＊D1	R255	F2	R349	＊E2	R480	＊E4	R614	＊B4	R723	＊D4	R891	＊B3		
C180	＊F3	C614	＊C3	C834	＊A3	IC108	C2	L804	A1	Q430	E3	R167	＊D1	R256	＊F2	R350	＊E2	R481	＊E4	R615	＊C4	R724	＊D4	R892	＊B3		
C181	＊F4	C615	＊C4	C835	A3	IC109	C2	L805	＊A2	Q601	＊C4	R168	＊C1	R257	＊F2	R351	E2	R482	＊E4	R616	＊C4	R725	C4	R893	＊B4		
C182	G2	C616	＊C4	C836	＊A3	IC110	C3	L806	＊A2	Q602	＊C4	R168	＊D1	R258	F2	R352	E2	R483	＊E4	R617	＊C4	R801	＊A2	R894	＊B4		
C183	G2	C617	＊C3	C837	＊A3	IC111	C1	L807	＊A3	Q603	＊B4	R169	＊C1	R259	＊F2	R353	＊D1	R484	＊F4	R618	＊C4	R802	＊A2	R895	＊B3		
C184	G2	C618	＊C4	C838	＊A4	IC112	C2	L808	A4	Q604	＊C4	R169	＊D1	R260	＊F2	R354	＊D1	R485	＊F4	R619	＊B3	R803	＊A2	R896	＊B4		
C185	＊G2	C619	＊C4	C839	B4	IC113	G3	L809	＊B2	Q650	＊C4	R170	＊C2	R261	F2	R355	＊D1	R486	＊F5	R620	＊B3	R804	＊A1	R897	＊B3		
C186	＊G2	C620	＊C4	C840	＊A4	IC114	E2	L810	＊B2	Q651	＊C5	R171	＊C1	R262	F2	R356	＊D3	R487	＊F4	R621	＊B4	R805	＊A1	R898	＊B3		
C187	F2	C621	＊C4	C841	＊A4	IC115	G4	L811	B2	Q652	＊C5	R171	＊D1	R263	F2	R357	＊D3	R488	＊F5	R622	＊B4	R806	＊A1	R899	＊B3		
C188	＊E2	C622	＊C3	C842	＊A4	IC116	F2	L812	＊B3	Q653	＊C5	R172	＊D1	R264	F2	R358	＊E2	R489	＊F4	R623	＊C4	R807	＊A2	R900	＊B3		
C189	＊F2	C623	＊C3	C843	＊A4	IC117	F2			Q680	＊D4	R173	D1	R265	＊F2	R359	＊E1	R490	＊F5	R624	＊C3	R808	＊A1	R901	＊B2		
C190	E2	C624	C3	C844	A4	IC118	D4	Q101	G5	Q701	＊D4	R174	D1	R266	F2	R360	＊D3	R491	＊F5	R625	＊C4	R809	＊A2	R902	＊B2		
C191	＊F2	C625	D4	C845	＊A4	IC119	＊D3	Q102	F4	Q702	＊C4	R175	＊D1	R267	F2	R361	＊D3	R492	＊F5	R626	＊C4	R810	＊A1	R903	＊B2		
C192	＊E2	C626	D4	C846	B2	IC120	＊D3	Q103	G4	Q703	＊D4	R176	＊C1	R268	F2	R401	＊F4	R493	＊F5	R627	＊C4	R811	＊A1	R904	＊B2		

ES-26
SUFFIX: -12

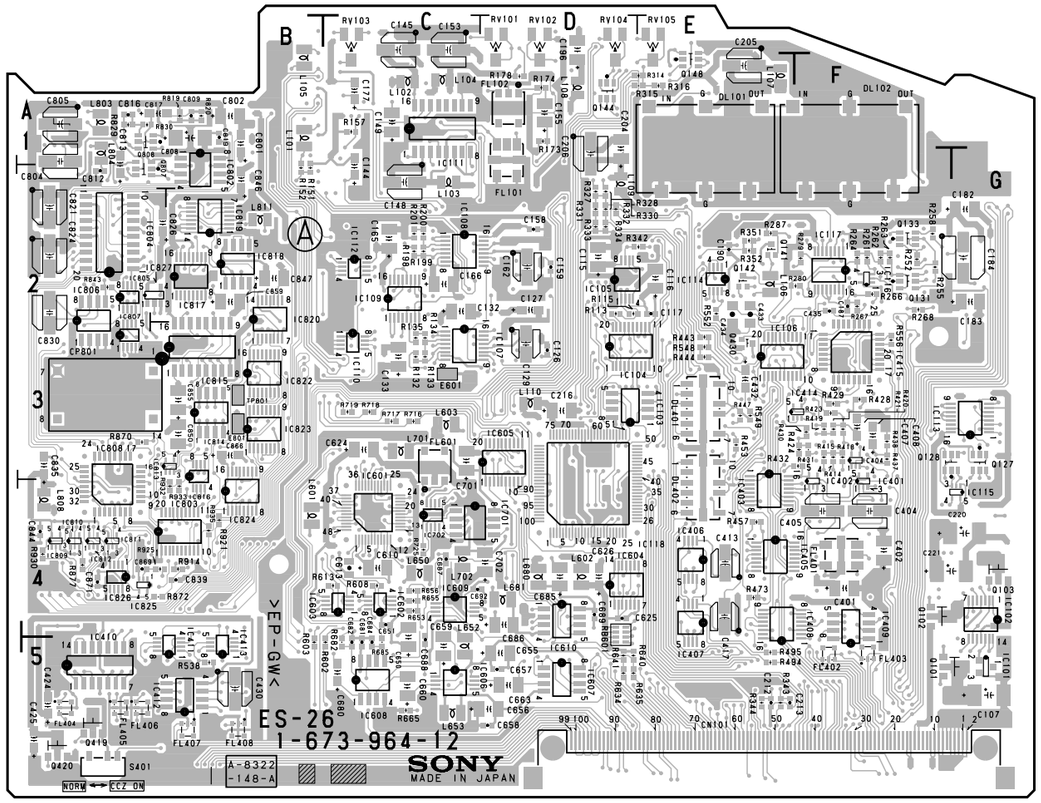

ES-26 -A SIDE-
SUFFIX: -12

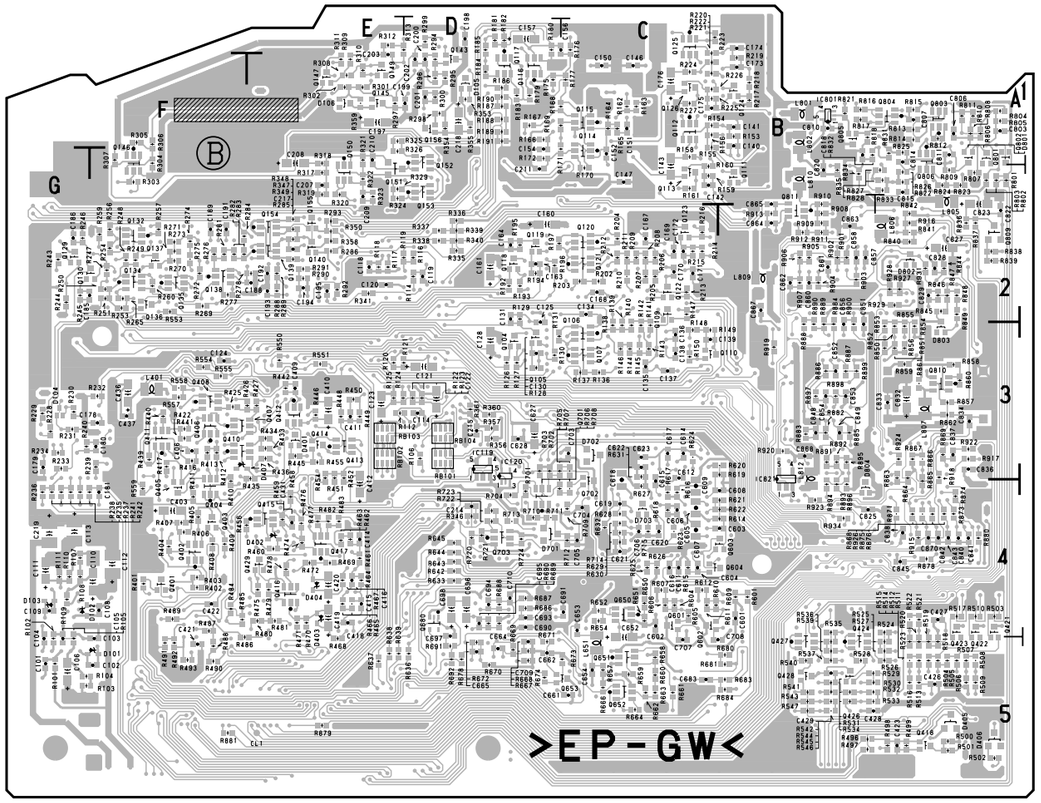

ES-26 -B SIDE-
SUFFIX: -12

ES-26(1-673-964-11)

C101	＊G5	C194	＊E2	C650	C5	C850	B3	IC404	F3	Q107	＊C3	Q805	＊B1	R186	＊D1	R279	F2	R412	＊F3	R505	＊A5	R639	＊E5	R823	＊A2	R916	＊A2
C102	＊F5	C195	＊E2	C651	C4	C851	＊B3	IC405	E4	Q109	＊C2	Q806	＊A1	R187	＊D1	R280	F2	R413	＊F3	R506	＊A5	R640	D5	R824	＊A2	R917	＊A3
C103	＊F5	C196	D1	C652	＊C5	C852	＊B3	IC406	E4	Q110	＊C3	Q807	A2	R188	＊D1	R281	＊F2	R414	F3	R507	＊A5	R641	D5	R825	＊A1	R918	＊A3
C104	＊G5	C197	＊E1	C653	＊C4	C853	＊B3	IC407	E4	Q111	＊B2	Q808	A1	R189	＊D1	R282	＊F2	R415	F3	R508	＊A5	R642	＊D4	R826	＊A2	R919	＊B3
C105	＊G5	C198	＊D1	C654	＊C5	C854	＊B3	IC408	E4	Q112	＊C1	Q809	＊A2	R190	＊D1	R283	＊F2	R416	＊F3	R509	＊A5	R643	＊D4	R827	＊A2	R920	＊B3
C106	＊G5	C199	＊D1	C655	D5	C855	B3	IC409	F4	Q113	＊C2	Q810	＊A3	R191	＊D1	R284	＊F2	R417	＊F3	R510	＊A4	R644	＊D4	R828	＊A2	R921	B4
C107	G5	C200	＊D1	C656	D5	C856	＊B3	IC410	A5	Q114	＊C1	Q811	＊B2	R192	＊D2	R285	＊E2	R418	F3	R511	＊A5	R645	＊D4	R829	A1	R922	＊A3
C108	＊F4	C201	＊D1	C657	D5	C857	＊B2	IC411	B5	Q115	＊C1			R193	＊D2	R286	＊E2	R419	F3	R512	＊A5	R650	＊C4	R830	A1	R923	＊B4
C109	＊G4	C202	＊D1	C658	D5	C858	＊B2	IC412	B5	Q116	＊D1	R101	＊G5	R194	＊D2	R287	E2	R420	F3	R513	＊A5	R651	＊C4	R831	＊A1	R924	＊A3
C110	＊F4	C203	＊E1	C659	C5	C859	B2	IC413	B5	Q117	＊D1	R102	＊G5	R195	＊D2	R288	＊E2	R421	F3	R514	＊A5	R652	＊C4	R832	＊B1	R925	A4
C111	＊G4	C204	D1	C660	C5	C860	＊B2	IC414	F3	Q118	＊D2	R103	＊G5	R196	＊D2	R289	＊E2	R422	＊F3	R515	＊A5	R653	C4	R833	＊A2	R926	＊A4
C112	＊F4	C205	E1	C661	＊C5	C861	＊B2	IC415	F3	Q119	＊D2	R104	＊G5	R197	＊D2	R290	＊E2	R423	F3	R516	＊A5	R654	＊C4	R834	＊B2	R927	＊A2
C113	＊G4	C206	D1	C662	＊D5	C862	＊B2	IC601	C4	Q120	＊C2	R105	＊G5	R198	C2	R291	＊E2	R424	F3	R517	＊A4	R655	C4	R835	＊B2	R928	＊A2
C114	＊D3	C207	＊E2	C663	D5	C863	＊B2	IC602	C4	Q121	＊C2	R106	＊D3	R199	C2	R292	＊E2	R425	＊F3	R518	＊A5	R656	C4	R836	＊A2	R929	＊A2
C115	D2	C208	＊E1	C664	＊D5	C864	＊B2	IC603	C4	Q122	＊C2	R107	＊G4	R200	C2	R293	＊E2	R426	＊E3	R519	＊A5	R657	＊C5	R837	＊A2	R930	A4
C116	E2	C209	＊E2	C665	＊D5	C865	＊B2	IC604	D4	Q123	＊C2	R108	＊G4	R201	C2	R294	＊D1	R427	＊E3	R520	＊A5	R658	＊C5	R838	＊A2	R931	＊A2
C117	E2	C210	＊E1	C680	C5	C866	B3	IC605	D3	Q124	＊B1	R109	＊G4	R202	＊C2	R295	＊D1	R428	F3	R521	＊A4	R659	＊C5	R839	＊A2	R932	B4
C118	＊E2	C211	＊D2	C681	C5	C867	＊B2	IC606	C5	Q125	＊C1	R110	＊G4	R203	＊C2	R296	＊D1	R429	F3	R522	＊A4	R660	＊C5	R840	＊A2	R933	B4
C119	＊D2	C212	E5	C682	C5	C868	＊B3	IC607	D5	Q126	＊C1	R111	＊G4	R204	＊C2	R297	＊E1	R430	F3	R523	＊A5	R661	＊C5	R841	＊A2	R934	＊B4
C120	＊E2	C213	E5	C683	＊C5	C869	A4	IC608	C5	Q127	G3	R112	＊E3	R205	＊C2	R298	＊D1	R431	F3	R524	＊A4	R662	＊C5	R842	＊A2	R935	B4
C121	＊D3	C214	＊D4	C684	C5	C870	＊A4	IC609	C4	Q128	F3	R113	D2	R206	＊C2	R299	＊D1	R432	F3	R525	＊A5	R663	＊C5	R843	A2		
C122	＊D3	C215	＊D3	C685	D4	C871	A4	IC610	D4	Q129	＊G2	R114	＊D2	R207	＊C2	R300	＊D1	R433	＊E3	R526	＊A5	R664	＊C5	R844	＊A2	RB101	＊D3
C123	＊E3	C216	D3	C686	D4			IC701	C4	Q130	＊F2	R115	D2	R208	＊C2	R301	＊E1	R434	＊E3	R527	＊A5	R665	C5	R845	＊A2	RB102	＊E3
C124	＊F3	C217	＊E2	C687	C4	CL1	＊E5	IC702	C4	Q131	F2	R116	＊D2	R209	＊C2	R302	＊E1	R435	＊E3	R528	＊B5	R666	＊C5	R846	＊A2	RB103	＊E3
C125	＊D3	C218	＊D1	C688	C5			IC801	＊B1	Q132	＊F2	R117	＊E2	R210	＊C2	R303	＊F2	R436	＊E3	R529	＊B5	R667	＊D5	R847	＊A2	RB104	＊D3
C126	D3	C219	＊G4	C689	D4	CN101	E5	IC802	B2	Q133	F2	R118	＊E2	R211	＊C2	R304	＊F1	R437	F3	R530	＊B5	R668	＊D5	R848	＊A2	RB601	D4
C127	D2	C220	G4	C690	＊D4			IC803	B4	Q134	＊F2	R119	＊D2	R212	＊C2	R305	＊F1	R438	F3	R531	＊B5	R669	＊D5	R849	＊A2		
C128	＊D3	C221	F4	C691	＊C4	CP801	A3	IC804	A2	Q135	＊F2	R120	＊E3	R213	＊C2	R306	＊F1	R439	＊F3	R532	＊B5	R670	＊D5	R850	＊A3	RV101	D1
C129	D3	C401	F4	C692	C4			IC805	A2	Q136	＊F2	R121	＊D3	R214	＊C2	R307	＊F1	R440	＊F3	R533	＊B5	R671	＊D5	R851	＊A3	RV102	D1
C130	＊D3	C402	F4	C693	＊D4	D101	＊F5	IC806	A2	Q137	＊F2	R122	＊D3	R215	＊C2	R308	＊E1	R441	＊F3	R534	＊B5	R672	＊D5	R852	＊A3	RV103	C1
C131	＊D2	C403	＊F4	C694	＊D4	D102	＊G4	IC807	A3	Q138	＊F2	R123	＊D3	R216	＊C2	R309	＊E1	R442	＊E3	R535	＊B4	R673	＊C5	R853	＊A3	RV104	D1
C132	C2	C404	F4	C695	＊D4	D103	＊G4	IC808	A4	Q139	＊E2	R124	＊E3	R217	＊B1	R310	＊E1	R443	E3	R536	＊B5	R674	＊D5	R854	＊A3	RV105	E1
C133	C3	C405	F4	C696	＊D4	D104	＊G3	IC809	A4	Q140	＊E2	R125	＊E3	R218	＊B1	R311	＊E1	R444	E3	R537	＊B5	R678	＊D5	R855	＊A3		
C134	＊C2	C406	＊F3	C697	＊D4	D105	＊D1	IC810	A4	Q141	E2	R126	＊D3	R219	＊B1	R312	＊E1	R445	＊E3	R538	B5	R680	＊B5	R856	＊A3	S401	A5
C135	＊C3	C407	F3	C698	＊D4	D106	＊E1	IC811	A4	Q142	E2	R127	＊D3	R220	＊C1	R313	＊D1	R446	＊E3	R539	＊B5	R681	＊B5	R857	＊A3		
C136	＊C3	C408	F3	C701	C3	D401	＊E3	IC812	A4	Q143	＊D1	R128	＊D3	R221	＊C1	R314	E1	R447	E3	R540	＊B5	R682	C5	R858	＊A3	TP801	B3
C137	＊C3	C409	＊E3	C702	D4	D402	＊E4	IC813	B3	Q144	D1	R129	＊D2	R222	＊C1	R315	E1	R448	＊E3	R541	＊B5	R683	＊B5	R859	＊A3		
C138	＊C3	C410	＊E3	C703	＊C3	D403	＊E4	IC814	B3	Q145	＊E1	R130	＊D3	R223	＊C1	R316	E1	R449	＊E3	R542	＊B5	R684	＊B5	R860	＊A3	＊: B SIDE	
C139	＊C3	C411	＊E3	C704	＊C4	D404	＊E4	IC815	B3	Q146	＊F1	R131	＊D3	R224	＊C1	R317	＊E2	R450	＊E3	R543	＊B5	R685	C5	R861	＊A3		
C140	＊B1	C412	＊E4	C705	＊C4	D405	＊A5	IC816	B3	Q147	＊E1	R132	C3	R225	＊C1	R318	＊E1	R451	＊E3	R544	＊B5	R686	＊D4	R862	＊A3		
C141	＊B1	C413	E4	C706	＊C4	D406	＊A5	IC817	B2	Q148	E1	R133	C3	R226	＊C1	R319	＊E2	R452	＊E3	R545	＊B5	R687	＊D4	R863	＊A3		
C142	＊C2	C414	＊E4	C707	＊C5	D407	＊F3	IC818	B2	Q149	＊E1	R134	C3	R227	＊C1	R320	＊E2	R453	E3	R546	＊B5	R688	＊D4	R864	＊A3		
C143	＊C2	C415	＊E4	C708	＊B5	D701	＊D4	IC819	B2	Q150	＊E2	R135	C3	R228	＊G3	R321	＊E1	R454	＊E3	R547	＊B5	R689	＊D4	R865	＊A4		
C144	C2	C416	＊E4	C709	＊D5	D702	＊C3	IC820	B2	Q151	＊E2	R136	＊C3	R229	＊G3	R322	＊E2	R455	＊E3	R548	E3	R690	＊D4	R866	＊A3		
C145	C1	C417	E4	C710	＊D4	D703	＊C4	IC821	＊B3	Q152	＊D1	R137	＊C3	R230	＊G3	R323	＊E2	R456	＊E4	R549	E3	R691	＊D5	R867	＊A3		
C146	＊C1	C418	＊E4	C801	B1	D801	＊A1	IC822	B3	Q153	＊D2	R138	＊C3	R231	＊G3	R324	＊E2	R457	E4	R550	＊E3	R692	＊D5	R868	＊A4		
C147	＊C2	C419	＊E4	C802	B1	D802	＊A2	IC823	B3	Q154	＊E2	R139	＊C3	R232	＊F3	R325	＊E1	R458	＊E4	R551	＊E3	R701	＊D4	R869	＊A3		
C148	C2	C420	＊E4	C803	＊A1	D803	＊A3	IC824	B4	Q155	＊E2	R140	＊C3	R233	＊G3	R326	＊E1	R459	＊E4	R552	E2	R702	＊D3	R870	A3		
C149	C1	C421	＊F5	C804	A1	D804	＊B4	IC825	A4	Q156	＊D1	R141	＊C3	R234	＊G3	R327	D2	R460	＊E4	R553	＊F2	R703	＊D3	R871	＊A4		
C150	＊C1	C422	＊F4	C805	A1			IC826	A4	Q401	＊F4	R142	＊C3	R235	＊G4	R328	D2	R461	＊E4	R554	＊F3	R704	＊D4	R872	A4		
C151	＊C1	C423	＊A5	C806	＊A1	DL101	E1	IC827	A2	Q402	＊F4	R143	＊C3	R236	＊G4	R329	＊E2	R462	＊E4	R555	＊F3	R705	＊D3	R873	＊A4		
C152	＊C1	C424	A5	C807	＊A1	DL102	F1			Q403	＊F4	R144	＊C3	R237	＊G4	R330	D2	R463	＊E4	R556	F3	R706	＊D4	R874	＊A4		
C153	C1	C425	A5	C808	B1	DL401	E3	L101	B1	Q404	＊F4	R145	＊C3	R238	＊G4	R331	D2	R464	＊E4	R557	＊F3	R707	＊C3	R875	＊A4		
C154	＊D1	C426	＊A5	C809	B1	DL402	E4	L102	C1	Q405	＊F4	R146	＊C3	R239	＊F3	R332	D2	R465	＊E4	R558	＊F3	R708	＊C4	R876	＊A4		
C155	D1	C427	＊A4	C810	＊B1			L103	C2	Q406	＊F3	R147	＊C2	R240	＊G3	R333	D2	R466	＊E4	R559	＊F4	R709	＊C4	R877	A4		
C156	＊C1	C428	＊B5	C811	＊A1	E601	C3	L104	C1	Q407	＊F3	R148	＊C3	R241	＊G4	R334	D2	R467	＊E4	R601	＊B4	R710	＊D4	R878	＊A4		
C157	＊D1	C429	＊B5	C812	A2	E801	B3	L105	B1	Q408	＊F3	R149	＊C3	R242	＊F4	R335	＊D2	R468	＊E5	R602	C5	R711	＊D4	R879	＊E5		
C158	D2	C430	B5	C813	A1			L106	E2	Q410	＊F3	R150	＊C3	R243	＊G2	R336	＊D2	R469	＊E4	R603	B5	R712	＊C4	R880	＊A4		
C159	D2	C431	＊E4	C814	＊A1	FL101	D1	L107	E1	Q411	＊F3	R151	B2	R244	＊G2	R337	＊D2	R470	＊E4	R604	＊C4	R713	＊D4	R881	＊F5		
C160	＊D2	C432	E3	C815	＊A2	FL102	D1	L108	D1	Q412	＊E3	R152	B2	R245	＊G2	R338	＊D2	R471	＊E4	R605	＊C4	R714	＊C4	R882	＊B3		
C161	＊D2	C433	E2	C816	A1	FL401	F4	L109	D2	Q413	＊E3	R153	＊B1	R246	＊G2	R339	＊D2	R472	＊E4	R606	＊C4	R715	＊C4	R883	＊B3		
C162	D2	C434	E2	C817	A1	FL402	F5	L110	D3	Q414	＊E3	R154	＊C1	R247	＊F2	R340	＊D2	R473	E4	R607	＊C4	R716	C3	R884	＊B3		
C163	＊D2	C435	F2	C818	＊B1	FL403	F5	L401	＊F3	Q415	＊E4	R155	＊C1	R248	＊F2	R341	＊E2	R474	＊E4	R608	C4	R717	C3	R885	＊B3		
C164	＊D2	C436	＊F3	C819	B1	FL404	A5	L601	B4	Q416	＊E4	R156	＊C1	R249	＊F2	R342	E2	R475	＊E4	R609	＊B4	R718	C3	R886	＊B3		
C165	C2	C437	＊F3	C820	＊B2	FL405	A5	L602	D4	Q417	＊E4	R157	C1	R250	＊F2	R343	E5	R476	＊E4	R610	＊C4	R719	C3	R887	＊B3		
C166	C2	C601	＊B4	C821	A2	FL406	A5	L603	C3	Q418	＊A5	R158	＊C1	R251	＊F2	R344	E5	R477	＊E4	R611	＊C4	R720	＊D4	R888	＊B3		
C167	＊C2	C602	＊C4	C822	＊A2	FL407	B5	L650	C4	Q419	A5	R159	＊C2	R252	F2	R346	＊D4	R478	＊E4	R612	＊C4	R721	＊D4	R889	＊B3		
C168	＊C2	C603	＊B4	C823	＊A2	FL408	B5	L651	＊C5	Q420	A5	R160	＊C2	R253	＊F2	R347	＊E2	R479	＊E4	R613	C4	R722	＊D4	R890	＊B3		
C169	＊C2	C604	＊C4	C824	A2	FL601	C3	L652	C5	Q421	＊A4	R161	＊C2	R254	＊F2	R348	＊E2	R480	＊E4	R614	＊B4	R723	＊D4	R891	＊B3		
C170	＊C2	C605	＊C4	C825	＊B4			L653	C5	Q422	＊A4	R162	＊C1	R255	F2	R349	＊E2	R481	＊E4	R615	＊C4	R724	＊D4	R892	＊B3		
C171	＊C2	C606	＊C4	C826	A2	IC101	G5	L680	D4	Q423	＊A4	R163	＊C1	R256	＊F2	R350	＊E2	R482	＊E4	R616	＊C4	R725	C4	R893	＊B4		
C172	＊C2	C607	＊C4	C827	＊A2	IC102	G4	L681	D4	Q424	＊B5	R164	＊C1	R257	＊F2	R351	E2	R483	＊E4	R617	＊C4	R801	＊A2	R894	＊B4		
C173	＊B1	C608	＊B4	C828	＊A2	IC103	D3	L701	C3	Q426	＊B5	R165	＊C1	R258	F2	R352	E2	R484	＊F4	R618	＊C4	R802	＊A2	R895	＊B3		
C174	＊B1	C609	＊C4	C829	＊A2	IC104	D3	L702	C4	Q427	＊B5	R166	＊D1	R259	＊F2	R353	＊D1	R485	＊F4	R619	＊B3	R803	＊A2	R896	＊B4		
C175	＊C1	C610	C4	C830	A2	IC105	D2	L801	＊B1	Q428	＊B5	R167	＊D1	R260	＊F2	R354	＊D1	R486	＊F5	R620	＊B3	R804	＊A1	R897	＊B3		
C176	＊C1	C611	＊C4	C832	＊A3	IC106	E3	L802	＊B1	Q429	＊E4	R168	＊C1	R261	F2	R355	＊D1	R487	＊F4	R621	＊B4	R805	＊A1	R898	＊B3		
C177	C1	C612	＊C3	C833	＊A3	IC107	C3	L803	A1	Q430	E3	R169	＊C1	R262	F2	R356	＊D3	R488	＊F5	R622	＊B4	R806	＊A1	R899	＊B3		
C178	＊F3	C613	C4	C834	＊A3	IC108	C2	L804	A1	Q601	＊C4	R170	＊C2	R263	F2	R357	＊D3	R489	＊F4	R623	＊C4	R807	＊A2	R900	＊B3		
C179	＊G3	C614	＊C3	C835	A3	IC109	C2	L805	＊A2	Q602	＊C4	R171	＊C1	R264	F2	R358	＊E2	R490	＊F5	R624	＊C3	R808	＊A1	R901	＊B2		
C180	＊F3	C615	＊C4	C836	＊A3	IC110	C3	L806	＊A2	Q603	＊B4	R172	＊D1	R265	＊F2	R359	＊E1	R491	＊F5	R625	＊C4	R809	＊A2	R902	＊B2		
C181	＊F4	C616	＊C4	C837	＊A3	IC111	C1	L807	＊A3	Q604	＊C4	R173	D1	R266	F2	R360	＊D3	R492	＊F5	R626	＊C4	R810	＊A1	R903	＊B2		
C182	G2	C617	＊C3	C838	＊A4	IC112	C2	L808	A4	Q650	＊C4	R174	D1	R267	F2	R361	＊D3	R493	＊F5	R627	＊C4	R811	＊A1	R904	＊B2		
C183	G2	C618	＊C4	C839	B4	IC113	G3	L809	＊B2	Q651	＊C5	R175	＊D1	R268	F2	R401	＊F4	R494	E5	R628	＊C4	R812	＊A1	R905	＊B2		
C184	G2	C619	＊C4	C840	＊A4	IC114	E2	L810	＊B2	Q652	＊C5	R176	＊C1	R269	＊F2	R402	＊F4	R495	E5	R629	＊C4	R813	＊A1	R906	＊B2		
C185	＊F2	C620	＊C4	C841	＊A4	IC115	G4	L811	B2	Q653	＊C5	R177	＊C1	R270	＊F2	R403	＊F4	R496	＊B5	R630	＊C4	R814	＊A1	R907	＊B2		
C186	＊G2	C621	＊C4	C842	＊A4	IC116	F2	L812	＊B3	Q680	＊D4	R178	D1	R271	＊F2	R404	＊F4	R497	＊B5	R631	＊C3	R815	＊A1	R908	＊B2		
C187	F2	C622	＊C3	C843	＊A4	IC117	F2			Q701	＊D4	R179	＊D1	R272	＊F2	R405	＊F4	R498	＊A5	R632	＊C4	R816	＊B1	R909	＊B2		
C188	＊E2	C623	＊C3	C844	A4	IC118	D4	Q101	G5	Q702	＊C4	R180	＊D1	R273	＊F2	R406	＊F4	R499	＊A5	R633	＊D4	R817	＊B1	R910	＊B2		
C189	＊F2	C624	C3	C845	＊A4	IC119	＊D3	Q102	F4	Q703	＊D4	R181	＊D1	R274	＊F2	R407	＊F4	R500	＊A5	R634	D5	R818	＊B1	R911	＊B2		
C190	E2	C625	D4	C846	B2	IC120	＊D3	Q103	G4	Q801	＊A1	R182	＊D1	R275	＊F2	R408	＊F4	R501	＊A5	R635	D5	R819	B1	R912	＊B2		
C191	＊F2	C626	D4	C847	B2	IC401	F4	Q104	＊D3	Q802	＊A1	R183	＊D1	R276	＊F2	R409	＊F4	R502	＊A5	R636	＊D5	R820	B1	R913	＊B2		
C192	＊E2	C627	＊D3	C848	＊B3	IC402	F4	Q105	＊D3	Q803	＊A1	R184	＊D1	R277	＊F2	R410	＊F4	R503	＊A4	R637	＊E5	R821	＊B1	R914	B4		
C193	＊E2	C628	＊D3	C849	＊B3	IC403	E4	Q106	＊C3	Q804	＊A1	R185	＊D1	R278	＊E2	R411	＊F4	R504	＊A5	R638	＊E5	R822	＊A2	R915	＊A4		

ES-26
SUFFIX: -11

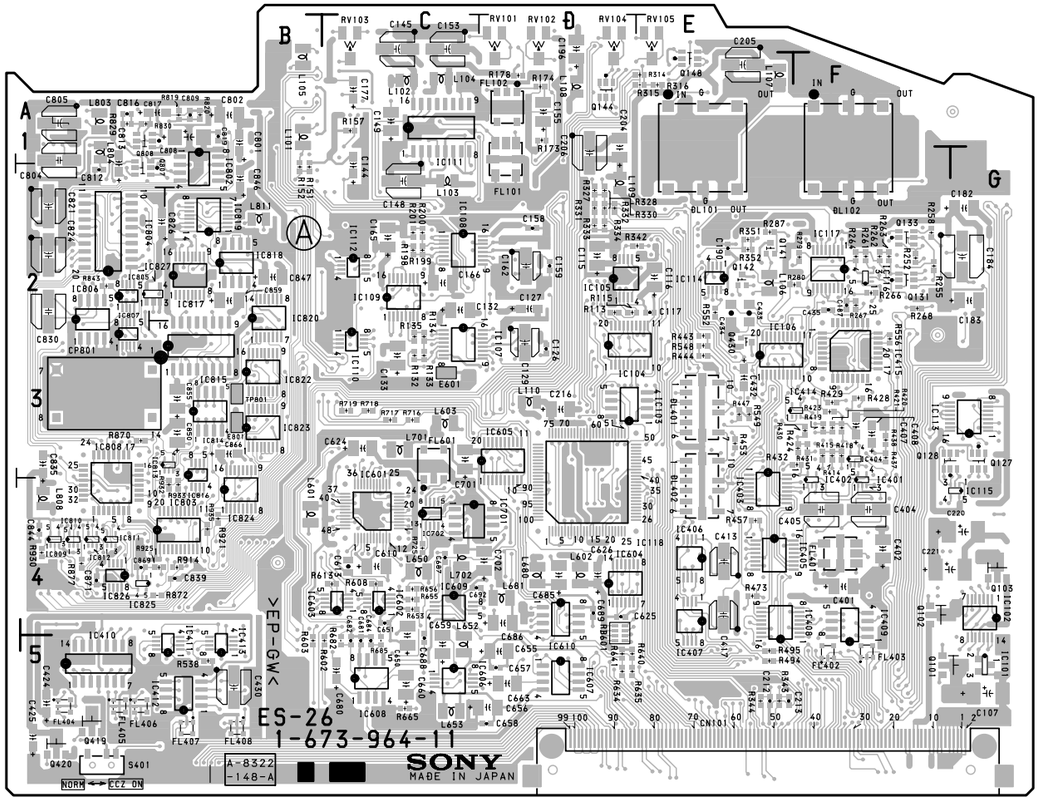

ES-26 -A SIDE-
SUFFIX: -11

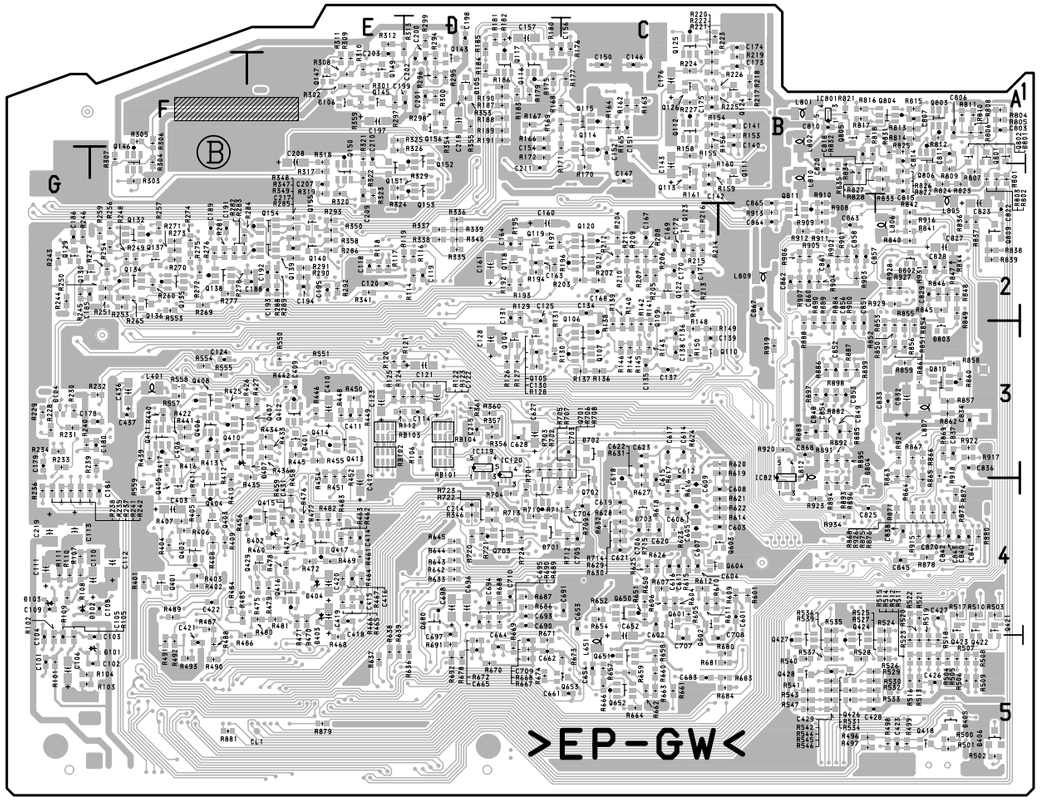

ES-26 -B SIDE-
SUFFIX: -11

5-13 (a)

FP-118(1-673-967-13)

C001	C4	C425	*E3	D301	*A1	Q008	*C2	R037	B4	R235	*D2	R415	*E4	R524	*E4	RB007	B3		
C002	*C4	C426	*E3	D302	*B2	Q009	*A3	R038	B4	R236	*D1	R416	*B4	R601	*B2	RB008	B3		
C003	*C3	C427	*E3	D303	B1	Q010	B3	R039	*B3	R237	*E2	R417	*B4	R602	*B2	RB009	B3		
C004	C4	C428	E4	D401	*E3	Q011	B3	R040	*B3	R238	*E2	R420	*B4	R603	*B2	RB010	*C3		
C005	C4	C429	E4	D402	*E3	Q012	*B3	R041	*B3	R239	*E2	R421	*B4	R604	*B2	RB011	*C3		
C007	C4	C430	*E3	D403	*B4	Q013	*A3	R042	*B3	R240	B1	R423	*B4	R605	*B2	RB012	*A3		
C008	C4	C431	*E3	D501	*B2	Q201	C2	R043	*B3	R241	B1	R425	*E4	R608	*D3	RB202	D2		
C009	*B3	C434	E3	D502	*D4	Q202	D2	R044	*B3	R242	B1	R426	*E4	R609	*D3	RB203	*C1		
C010	*B4	C435	E3	D503	*D4	Q203	*E1	R045	*A3	R243	B1	R427	*E4	R610	*B2	RB204	*B1		
C011	*B4	C436	*E3	D504	*A2	Q204	*E1	R047	*B3	R244	B1	R428	*E4	R611	B2	RB207	*B1		
C012	B3	C437	*E3	D605	*B2	Q205	*C1	R048	*B3	R245	B1	R429	*B4	R612	B2	RB208	C1		
C013	*B4	C438	*E3	D703	D3	Q300	*B1	R049	*B3	R246	B1	R430	*E3	R613	B2	RB209	C1		
C014	*B3	C439	*E3	D704	D3	Q301	*B2	R050	*B3	R247	*B1	R431	*B4	R614	B2	RB210	B1		
C015	B4	C440	E3	D801	E1	Q302	B2	R051	B3	R248	*B1	R432	*B4	R615	*B2	RB211	B1		
C016	B3	C441	E3			Q303	*B2	R052	*B3	R249	D2	R433	*B4	R616	*C4	RB212	B1		
C017	*B3	C442	E3	E001	*C4	Q304	*B2	R053	B3	R250	D2	R434	*B4	R617	*D4	RB801	B4		
C018	B4	C443	E4	E002	*C4	Q305	*C2	R054	*B3	R251	*D2	R435	*E4	R618	*A2	RB802	*A3		
C019	B3	C444	E4	E401	*E3	Q306	*B2	R055	*A3	R252	*D3	R436	*E2	R619	*C4	RB803	A3		
C020	*C3	C445	B4	E501	*D4	Q307	*B2	R056	B3	R253	*D3	R437	*E4	R620	*D4	RB804	*A3		
C021	C3	C446	B4			Q308	*C2	R057	*B3	R254	*D3	R438	*E2	R621	*D4	RB805	*A3		
C200	*C2	C447	*E2	F801	*E1	Q401	*E3	R058	*A3	R255	D3	R439	*E2	R622	*D4	RB806	*A4		
C201	C2	C448	*E4			Q402	*E3	R059	*A3	R256	*D3	R440	E3	R623	*A2	RB807	A4		
C202	*B1	C449	*E3	FB801	B4	Q403	*E3	R060	*C1	R257	C2	R441	E3	R624	*D3	RB808	A3		
C203	B1	C451	E4			Q404	*E3	R061	*C3	R258	D2	R442	B4	R625	*D3	RB809	*A3		
C204	*D2	C453	*E4	IC002	*B3	Q405	*E3	R062	*C3	R259	D2	R443	B4	R626	*D4				
C205	*D2	C454	*E4	IC003	*B3	Q406	*E3	R063	*C3	R260	*D2	R444	E4	R627	*D3	RV401	E3		
C206	*C2	C455	*E4	IC004	*C3	Q407	*E3	R064	*C3	R261	*D2	R445	E3	R628	*D3	RV402	E3		
C207	*D2	C456	*E4	IC006	*C3	Q408	*E3	R065	*C4	R262	*E1	R446	E3	R629	*D3	RV403	*E3		
C208	D2	C457	E4	IC200	*C1	Q409	*E3	R066	B3	R263	*E1	R447	E3	R630	A2	RV601	*D4		
C209	C1	C601	*D3	IC201	*B1	Q410	*E3	R067	*C2	R264	*E1	R448	E3	R631	A2	RV602	*D4		
C210	B1	C602	*D3	IC202	*E1	Q411	*E3	R068	*C3	R265	*E1	R451	*E3	R632	*A2	RV603	A2		
C211	*D1	C603	*D4	IC203	B2	Q412	*E3	R069	*C2	R266	*E1	R452	*E3	R633	A2	RV604	B2		
C212	*E2	C604	*D4	IC204	*D1	Q413	*E3	R070	*B3	R267	*E1	R453	E3	R635	*D4				
C213	*E2	C605	*A2	IC205	B1	Q414	*E3	R071	*A3	R268	*C2	R454	E3	R636	*D4	S001	B2		
C214	*B1	C606	*D4	IC206	D2	Q415	*E3	R072	B3	R269	C2	R455	*E4	R637	*A2	S002	B3		
C215	B1	C607	*D4	IC207	D3	Q501	*B2	R073	B3	R270	C2	R456	*E4	R638	*A2	S003	C3		
C216	B1	C608	A2	IC208	D2	Q502	*B2	R074	*A3	R271	*E2	R457	*E4	R639	B2	S004	C3		
C217	B1	C609	*D4	IC209	C2	Q504	*D3	R075	*B3	R272	*E2	R458	*E4	R640	*D3	S005	C3		
C218	*B1	C610	*D3	IC210	*D2	Q505	*D3	R076	*B3	R273	*E2	R459	*E4	R641	B2	S006	C3		
C219	*B1	C611	B2	IC300	A1	Q506	*D3	R077	*B3	R274	*D1	R460	*E4	R642	*D3	S200	E2		
C220	D2	C613	B2	IC301	B1	Q507	*D3	R078	*C3	R275	*D1	R461	*E3	R643	B2	S201	B4		
C221	D2	C614	A1	IC302	B1	Q508	*A2	R079	*C3	R276	*D1	R462	*E3	R644	*A2	S203	E1		
C222	*D3	C615	*A1	IC303	A1	Q509	*D3	R080	*C3	R277	*D1	R463	*E3	R645	*D3	S401	E4		
C223	*D3	C616	A1	IC401	*E4	Q510	*D4	R081	*C3	R278	*D1	R464	*E3	R646	*A2	S402	E4		
C224	C2	C617	*A1	IC403	*E4	Q511	*D3	R082	*B3	R279	*D1	R467	E3	R647	*A1	S403	E3		
C225	C2	C618	A2	IC404	*E4	Q512	*A2	R083	B3	R280	*D1	R468	E3	R649	A2	S404	E3		
C226	D2	C619	A2	IC405	*B4	Q513	*D4	R084	*C4	R281	*D1	R469	E3	R650	*A2	S501	B3		
C227	*D2	C620	*A1	IC406	*E4	Q514	*A2	R085	*C3	R282	*D1	R470	E3	R651	*D4	S801	A3		
C228	D2	C621	*D4	IC407	*E4	Q515	*D4	R086	*C3	R283	*D1	R471	*E3	R652	*E3	S802	A3		
C229	*C2	C622	D4	IC408	*E2	Q516	*D4	R087	*C3	R300	*B1	R472	*E3	R653	*A2	S803	C4		
C300	*B2	C623	B2	IC409	*E4	Q701	D3	R088	B3	R301	*B2	R474	E3	R654	A2	S804	B4		
C301	B2	C624	D4	IC410	*E4	Q702	D3	R089	B4	R302	B2	R475	*E3	R656	*A3	S805	B4		
C302	*B1	C625	B4	IC411	*E3	Q801	E2	R090	B4	R303	B2	R476	E3	R657	D4	S806	A4		
C303	*A1	C706	D3	IC412	*E3	Q802	E2	R091	*C3	R304	*B2	R477	*E3	R658	*E4	S807	B3		
C304	A1	C707	D3	IC413	*E3	Q803	*E2	R092	B4	R305	*B2	R478	*E3	R659	D4	S808	B3		
C305	B1	C718	D3	IC414	*E3	Q804	*E2	R093	*B4	R306	*B2	R479	*E3	R660	*D3	S809	B3		
C306	B2	C719	D3	IC415	*E3			R094	*B4	R307	*B2	R480	*E3	R661	*B2	S810	B3		
C307	B2	C801	B4	IC416	*E4	R001	*B3	R095	*B4	R308	*B1	R481	*E3	R702	*D3	S811	*A4		
C308	*B2	C802	A3	IC601	*D3	R002	*B3	R200	C2	R309	*B2	R482	*E3	R703	*D3				
C309	B2	C804	A3	IC602	*D3	R003	*B3	R201	C2	R310	*B2	R483	*E3	R705	*D3	TP001	*B3		
C310	*B2	C806	E1	IC605	*B2	R004	*C3	R202	C2	R311	*C2	R484	*E3	R707	*D3	TP002	*A3		
C311	B2	C807	*E2	IC606	*A2	R005	D3	R203	*C2	R312	B1	R485	*E3	R708	*D3	TP200	*C1		
C312	B2			IC607	*A2	R006	*A3	R204	*C2	R313	B1	R486	*E3	R715	*C3	TP201	*D1		
C313	*B2	CN001	*B4	IC701	*D3	R007	*B3	R205	*C2	R314	*B2	R487	*E3	R717	*D3	TP401	*E3		
C314	*C1	CN002	*C4	IC705	*D3	R008	*B3	R206	*C2	R315	*C1	R488	*E3	R718	*D3	TP402	*E3		
C315	*A1	CN003	*D4	IC801	B4	R009	*B3	R207	*C2	R316	*B2	R489	*E3	R719	*C3	TP601	*D3		
C316	*B1	CN004	*C2	IC802	B4	R010	*B3	R208	*C2	R317	*B2	R490	*E3	R720	D3	TP602	*D3		
C317	*A1	CN005	*A3	IC803	A3	R011	*B3	R209	*C2	R318	*B2	R491	*E3	R721	*D3	TP603	*A1		
C318	*C1	CN006	*E1	IC804	A4	R012	*B3	R210	*C2	R319	*B2	R492	*E3	R722	D3				
C401	*E4	CN008	*A3			R013	*B3	R211	*C1	R320	*B2	R493	*E3	R728	D3	X001	*B4		
C402	*E4			L001	*C3	R014	*B3	R212	*C2	R321	*B2	R494	*E3	R729	D3	X002	*B3		
C403	*E4	CV200	*C2	L002	*B3	R015	*B3	R213	C2	R322	*B2	R497	*E3	R730	D3	X200	*D2		
C404	*E4			L003	*B4	R016	*B3	R214	*D1	R323	*B2	R498	*E3	R731	*D3	X201	*C2		
C405	*E4	D001	B1	L200	B2	R017	*B3	R215	*D1	R324	*C1	R499	*E3	R733	D3	X202	*B1		
C406	*E4	D200	*C2	L300	*B2	R018	C3	R216	*D3	R325	*C1	R500	*E3	R736	D3				
C407	*E4	D201	C1	L301	B2	R019	*B3	R217	*D3	R326	*C1	R501	*E3	R738	D3	*: B SIDE			
C408	*E4	D202	*C1	L501	A2	R020	*B3	R218	*D2	R327	D4	R502	*E3	R801	A3				
C409	*E4	D203	B1	L601	*D4	R021	*B3	R219	*C1	R328	C2	R503	*E3	R802	A3				
C410	*E4	D204	*B1	L701	B4	R022	*B3	R220	*B1	R329	*C1	R504	*E3	R803	A3				
C411	*B4	D205	*D2			R023	*A3	R221	*B1	R330	*D2	R505	E3	R804	*E2				
C412	*B4	D206	D3	LI300	D4	R024	*C3	R222	*C1	R331	*D2	R506	*E4	R805	E2				
C413	*B4	D207	C2			R025	*B3	R223	*B1	R332	*D2	R507	*E2	R806	E2				
C414	*B4	D208	C2	ND200	C1	R026	*B3	R224	*B1	R333	B2	R508	E4	R807	E2				
C415	*B4	D209	C1			R027	*B3	R225	*B1	R401	*E4	R510	*E4	R808	*E2				
C416	*B4	D210	D1	PH401	*E2	R028	*B3	R226	*C1	R402	*E4	R512	*E4	R809	E1				
C417	*B4	D211	D1			R029	*B3	R227	*C1	R404	*E4	R513	*E4	R812	E1				
C418	*B4	D212	E1	Q001	*B3	R030	*B3	R228	*C1	R405	*E4	R514	*E4						
C419	*E4	D213	C2	Q002	*B3	R031	*B3	R229	*C1	R406	*E4	R515	E4	RB001	C3				
C420	*E4	D214	D2	Q003	*B3	R032	*B3	R230	C2	R407	*E4	R516	*E4	RB002	*C3				
C421	*E2	D215	D2	Q004	*B3	R033	B3	R231	*E2	R408	*E4	R517	E4	RB003	B3				
C422	E4	D216	E2	Q005	*B3	R034	*B4	R232	*D1	R412	*E4	R518	E4	RB004	B3				
C423	E3	D217	*C1	Q006	*C3	R035	B3	R233	*D1	R413	*E4	R522	*E4	RB005	B3				
C424	E3	D300	*B1	Q007	*B3	R036	B3	R234	*D1	R414	E4	R523	*E4	RB006	B3				

FP-118
SUFFIX: -13

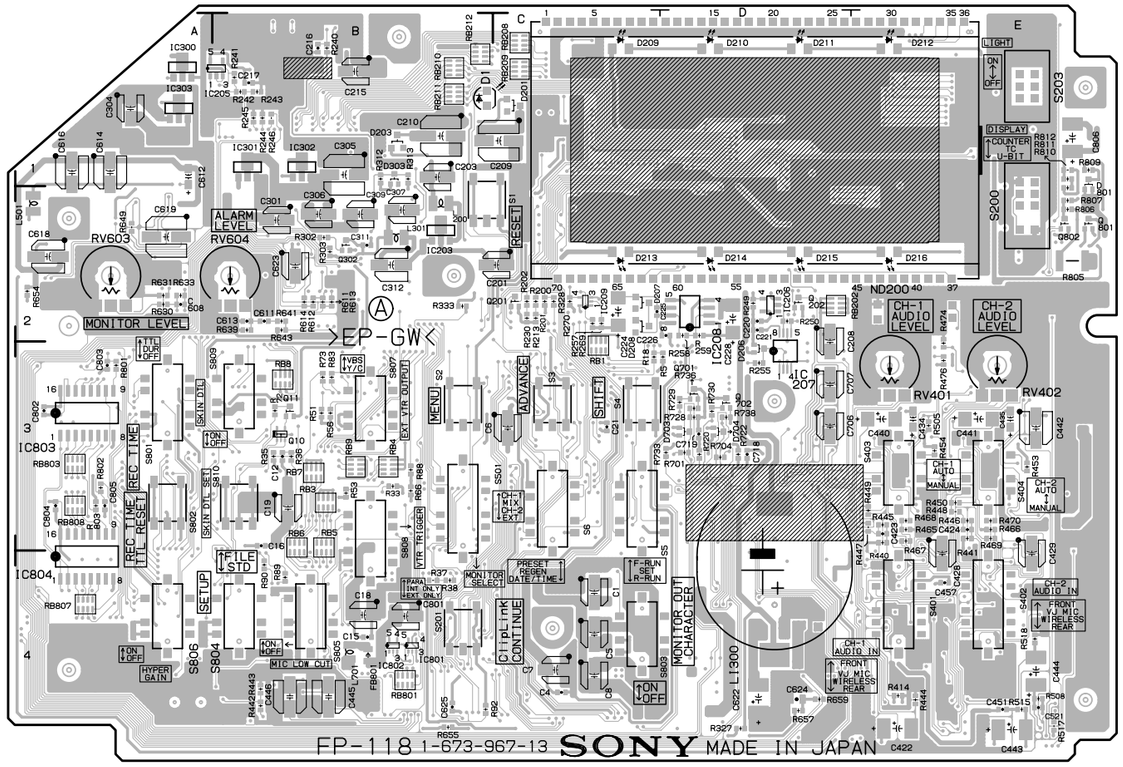

FP-118 **-A SIDE-**
SUFFIX: -13

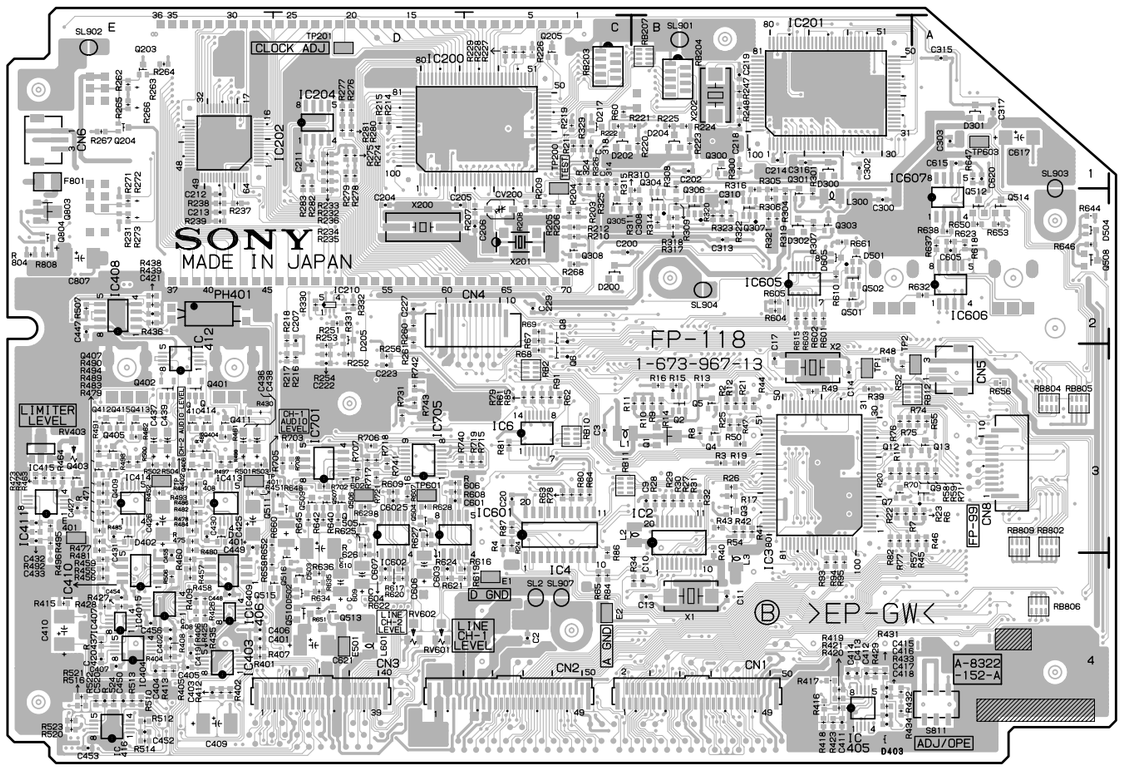

FP-118 **-B SIDE-**
SUFFIX: -13

FP-118(1-673-967-11,12)

C1	C4	C424	E3	CL21	＊C4	CL709	＊D4	IC302	B1	Q508	＊A2	R78	＊C3	R275	＊D1	R456	＊E4	R628	＊D3	RB212	B1
C2	＊C4	C425	＊E3	CL22	＊C4	CL710	＊D4	IC303	A1	Q509	＊D3	R79	＊C3	R276	＊D1	R457	＊E4	R629	＊D3	RB801	B4
C3	＊C3	C426	＊E3	CL23	＊D4	CL801	＊B4	IC401	＊E4	Q510	＊D4	R80	＊C3	R277	＊D1	R458	＊E4	R630	A2	RB802	＊A3
C4	C4	C427	＊E3	CL24	＊C4	CL802	＊B4	IC403	＊E4	Q511	＊D3	R81	＊C3	R278	＊D1	R459	＊E4	R631	A2	RB803	A3
C5	C4	C428	E4	CL25	＊C4	CL803	＊B4	IC404	＊E4	Q512	＊A2	R82	＊B3	R279	＊D1	R460	＊E4	R632	＊A2	RB804	＊A3
C6	C3	C429	E4	CL26	＊D4	CL804	＊B4	IC405	＊B4	Q513	＊D4	R83	B3	R280	＊D1	R461	＊E3	R633	A2	RB805	＊A3
C7	C4	C430	＊E3	CL27	＊B4	CL805	＊B4	IC406	＊E4	Q514	＊A2	R84	＊C4	R281	＊D1	R462	＊E3	R634	＊D4	RB806	＊A4
C8	C4	C431	＊E3	CL28	＊B4	CL806	＊A3	IC407	＊E4	Q515	＊D4	R85	＊C3	R282	＊D1	R463	＊E3	R635	＊D4	RB807	A4
C9	＊B3	C432	＊E3	CL29	＊C3	CL807	＊A3	IC408	＊E2	Q516	＊D4	R86	＊C3	R283	＊D1	R464	＊E3	R636	＊D4	RB808	A3
C10	＊B4	C433	＊E3	CL30	＊C3	CL808	＊A3	IC409	＊E4	Q701	D3	R87	＊C3	R300	＊B1	R465	E3	R637	＊A2	RB809	＊A3
C11	＊B4	C434	E3	CL31	＊C3	CL809	＊B4	IC410	＊E4	Q702	D3	R88	B3	R301	＊B2	R466	E3	R638	＊A2		
C12	B3	C435	E3	CL34	＊B4	CL810	＊B4	IC411	＊E3	Q801	E2	R89	B4	R302	B2	R467	E3	R639	B2	RV401	E3
C13	＊B4	C436	＊E3	CL35	＊B4	CL811	＊B4	IC412	＊E3	Q802	E2	R90	B4	R303	B2	R468	E3	R640	＊D3	RV402	E3
C14	＊B3	C437	＊E3	CL36	＊B4	CL812	＊B4	IC413	＊E3	Q803	＊E2	R91	＊C3	R304	＊B2	R469	E3	R641	B2	RV403	＊E3
C15	B4	C438	＊E3	CL37	＊C4	CL813	＊A3	IC414	＊E3	Q804	＊E2	R92	B4	R305	＊B2	R470	E3	R642	＊D3	RV601	＊D4
C16	B3	C439	＊E3	CL38	＊C4	CL814	＊A3	IC415	＊E3			R93	＊B4	R306	＊B2	R471	＊E3	R643	B2	RV602	＊D4
C17	＊B3	C440	E3	CL39	＊C4	CL815	＊A3	IC416	＊E4	R1	＊B3	R94	＊B4	R307	＊B2	R472	＊E3	R644	＊A2	RV603	A2
C18	B4	C441	E3	CL40	＊C4	CL816	＊A3	IC601	＊D3	R2	＊B3	R95	＊B4	R308	＊B1	R473	＊E3	R645	＊D3	RV604	B2
C19	B3	C442	E3	CL41	＊C4	CL817	＊D4	IC602	＊D3	R3	＊B3	R200	C2	R309	＊B2	R474	E3	R646	＊A2		
C20	＊C3	C443	E4	CL42	＊C4	CL818	＊E1	IC605	＊B2	R4	＊C3	R201	C2	R310	＊B2	R475	＊E3	R647	＊A1	S1	B2
C21	C3	C444	E4	CL43	＊C4	CL819	＊D4	IC606	＊A2	R5	D3	R202	C2	R311	＊C2	R476	E3	R648	＊D3	S2	B3
C200	＊C2	C445	B4	CL44	＊C4	CL820	＊D4	IC607	＊A2	R6	＊A3	R203	＊C2	R312	B1	R477	＊E3	R649	A2	S3	C3
C201	C2	C446	B4	CL45	＊C4			IC701	＊D3	R7	＊B3	R204	＊C2	R313	B1	R478	＊E3	R650	＊A2	S4	C3
C202	＊B1	C447	＊E2	CL46	＊B4	CN1	＊B4	IC705	＊D3	R8	＊B3	R205	＊C2	R314	＊B2	R479	＊E3	R651	＊D4	S5	C3
C203	B1	C448	＊E4	CL47	＊B4	CN2	＊C4	IC801	B4	R9	＊B3	R206	＊C2	R315	＊C1	R480	＊E3	R652	＊E3	S6	C3
C204	＊D2	C449	＊E3	CL48	＊B4	CN3	＊D4	IC802	B4	R10	＊B3	R207	＊C2	R316	＊B2	R481	＊E3	R653	＊A2	S200	E2
C205	＊D2	C450	＊E4	CL49	＊B4	CN4	＊C2	IC803	A3	R11	＊B3	R208	＊C2	R317	＊B2	R482	＊E3	R654	A2	S201	B4
C206	＊C2	C451	E4	CL50	＊C4	CN5	＊A3	IC804	A4	R12	＊B3	R209	＊C2	R318	＊B2	R483	＊E3	R655	B4	S203	E1
C207	＊D2	C452	＊E4	CL51	＊C4	CN6	＊E1			R13	＊B3	R210	＊C2	R319	＊B2	R484	＊E3	R656	＊A3	S401	E4
C208	D2	C453	＊E4	CL52	＊B4	CN8	＊A3	L1	＊C3	R14	＊B3	R211	＊C1	R320	＊B2	R485	＊E3	R657	D4	S402	E4
C209	C1	C454	＊E4	CL53	＊B4			L2	＊B3	R15	＊B3	R212	＊C2	R321	＊B2	R486	＊E3	R658	＊E4	S403	E3
C210	B1	C455	＊E4	CL54	＊C4	CV200	＊C2	L3	＊B4	R16	＊B3	R213	C2	R322	＊B2	R487	＊E3	R659	D4	S404	E3
C211	＊D1	C456	＊E4	CL55	＊B4			L200	B2	R17	＊B3	R214	＊D1	R323	＊B2	R488	＊E3	R660	＊D3	S501	B3
C212	＊E2	C457	E4	CL56	＊C4	D1	B1	L300	＊B2	R18	C3	R215	＊D1	R324	＊C1	R489	＊E3	R661	＊B2	S801	A3
C213	＊E2	C520	＊E4	CL57	＊B4	D200	＊C2	L301	B2	R19	＊B3	R216	＊D3	R325	＊C1	R490	＊E3	R701	D3	S802	A3
C214	＊B1	C521	E4	CL58	＊C4	D201	C1	L501	A2	R20	＊B3	R217	＊D3	R326	＊C1	R491	＊E3	R702	＊D3	S803	C4
C215	B1	C601	＊D3	CL59	＊C4	D202	＊C1	L601	＊D4	R21	＊B3	R218	＊D2	R327	D4	R492	＊E3	R703	＊D3	S804	B4
C216	B1	C602	＊D3	CL60	＊C4	D203	B1	L701	B4	R22	＊B3	R219	＊C1	R328	C2	R493	＊E3	R704	D3	S805	B4
C217	B1	C603	＊D4	CL61	＊C4	D204	＊B1			R23	＊A3	R220	＊B1	R329	＊C1	R494	＊E3	R705	＊D3	S806	A4
C218	＊B1	C604	＊D4	CL62	＊B4	D205	＊D2	LI300	D4	R24	＊C3	R221	＊B1	R330	＊D2	R495	＊E3	R706	＊D3	S807	B3
C219	＊B1	C605	＊A2	CL63	＊B4	D206	D3			R25	＊B3	R222	＊C1	R331	＊D2	R496	＊E3	R707	＊D3	S808	B3
C220	D2	C606	＊D4	CL64	＊B4	D207	C2	ND200	C1	R26	＊B3	R223	＊B1	R332	＊D2	R497	＊E3	R708	＊D3	S809	B3
C221	D2	C607	＊D4	CL65	＊B4	D208	C2			R27	＊B3	R224	＊B1	R333	B2	R498	＊E3	R715	＊C3	S810	B3
C222	＊D3	C608	A2	CL201	＊C4	D209	C1	PH401	＊E2	R28	＊B3	R225	＊B1	R401	＊E4	R499	＊E3	R717	＊D3	S811	＊A4
C223	＊D3	C609	＊D4	CL202	＊D4	D210	D1			R29	＊B3	R226	＊C1	R402	＊E4	R500	＊E3	R718	＊D3		
C224	C2	C610	＊D3	CL203	＊E4	D211	D1	Q1	＊B3	R30	＊B3	R227	＊C1	R404	＊E4	R501	＊E3	R719	＊C3	SL2	＊C4
C225	C2	C611	B2	CL204	＊E4	D212	E1	Q2	＊B3	R31	＊B3	R228	＊C1	R405	＊E4	R502	＊E3	R720	D3	SL901	＊B1
C226	D2	C612	A1	CL205	＊E4	D213	C2	Q3	＊B3	R32	＊B3	R229	＊C1	R406	＊E4	R503	＊E3	R721	＊D3	SL902	＊E1
C227	＊D2	C613	B2	CL206	＊D4	D214	D2	Q4	＊B3	R33	B3	R230	C2	R407	＊E4	R504	＊E3	R722	D3	SL903	＊A1
C228	D2	C614	A1	CL207	＊D4	D215	D2	Q5	＊B3	R34	＊B4	R231	＊E2	R408	＊E4	R505	E3	R728	D3	SL904	＊B2
C229	＊C2	C615	＊A1	CL208	＊D1	D216	E2	Q6	＊C3	R35	B3	R232	＊D1	R409	＊E4	R506	＊E4	R729	D3	SL907	＊C4
C300	＊B2	C616	A1	CL209	＊C4	D217	＊C1	Q7	＊B3	R36	B3	R233	＊D1	R412	＊E4	R507	＊E2	R730	D3		
C301	B2	C617	＊A1	CL210	＊C4	D300	＊B1	Q8	＊C2	R37	B4	R234	＊D1	R413	＊E4	R508	E4	R731	＊D3	TP1	＊B3
C302	＊B1	C618	A2	CL211	＊C4	D301	＊A1	Q9	＊A3	R38	B4	R235	＊D2	R414	E4	R510	＊E4	R733	D3	TP2	＊A3
C303	＊A1	C619	A2	CL212	＊C4	D302	＊B2	Q10	B3	R39	＊B3	R236	＊D1	R415	＊E4	R512	＊E4	R736	D3	TP200	＊C1
C304	A1	C620	＊A1	CL213	＊C4	D303	B1	Q11	B3	R40	＊B3	R237	＊E2	R416	＊B4	R513	＊E4	R738	D3	TP201	＊D1
C305	B1	C621	＊D4	CL214	＊B4	D401	＊E3	Q12	＊B3	R41	＊B3	R238	＊E2	R417	＊B4	R514	＊E4	R740	＊D3	TP401	＊E3
C306	B2	C622	D4	CL215	＊C4	D402	＊E3	Q13	＊A3	R42	＊B3	R239	＊E2	R418	＊B4	R515	E4	R741	＊D3	TP402	＊E3
C307	B2	C623	B2	CL401	＊B4	D501	＊B2	Q201	C2	R43	＊B3	R240	B1	R419	＊B4	R516	＊E4	R742	＊D3	TP601	＊D3
C308	＊B2	C624	D4	CL402	＊B4	D502	＊D4	Q202	D2	R44	＊B3	R241	B1	R420	＊B4	R517	E4	R743	＊D3	TP602	＊D3
C309	B2	C625	B4	CL403	＊B4	D503	＊D4	Q203	＊E1	R45	＊A3	R242	B1	R421	＊B4	R518	E4	R801	A3	TP603	＊A1
C310	＊B2	C706	D3	CL404	＊B4	D504	＊A2	Q204	＊E1	R46	＊A3	R243	B1	R423	＊B4	R520	＊E4	R802	A3		
C311	B2	C707	D3	CL405	＊D4	D605	＊B2	Q205	＊C1	R47	＊B3	R244	B1	R425	＊E4	R521	＊E4	R803	A3	X1	＊B4
C312	B2	C718	D3	CL406	＊D4	D703	D3	Q300	＊B1	R48	＊B3	R245	B1	R426	＊E4	R522	＊E4	R804	＊E2	X2	＊B3
C313	＊B2	C719	D3	CL407	＊D4	D704	D3	Q301	＊B2	R49	＊B3	R246	B1	R427	＊E4	R523	＊E4	R805	E2	X200	＊D2
C314	＊C1	C801	B4	CL408	＊D4	D801	E1	Q302	B2	R50	＊B3	R247	＊B1	R428	＊E4	R524	＊E4	R806	E2	X201	＊C2
C315	＊A1	C802	A3	CL409	＊D4			Q303	＊B2	R51	B3	R248	＊B1	R429	＊B4	R601	＊B2	R807	E2	X202	＊B1
C316	＊B1	C803	A3	CL410	＊D4	E1	＊C4	Q304	＊B2	R52	＊B3	R249	D2	R430	＊E3	R602	＊B2	R808	＊E2		
C317	＊A1	C804	A3	CL411	＊E4	E2	＊C4	Q305	＊C2	R53	B3	R250	D2	R431	＊B4	R603	＊B2	R809	E1	＊: B SIDE	
C318	＊C1	C805	A3	CL412	＊D4	E401	＊E3	Q306	＊B2	R54	＊B3	R251	＊D2	R432	＊B4	R604	＊B2	R810	E2		
C401	＊E4	C806	E1	CL413	＊D4	E501	＊D4	Q307	＊B2	R55	＊A3	R252	＊D3	R433	＊B4	R605	＊B2	R811	E1		
C402	＊E4	C807	＊E2	CL414	＊D4			Q308	＊C2	R56	B3	R253	＊D3	R434	＊B4	R606	＊D3	R812	E1		
C403	＊E4			CL415	＊E4	F801	＊E1	Q401	＊E3	R57	＊B3	R254	＊D3	R435	＊E4	R607	＊D3				
C404	＊E4	CL1	＊D3	CL416	＊E4			Q402	＊E3	R58	＊A3	R255	D3	R436	＊E2	R608	＊D3	RB1	C3		
C405	＊E4	CL2	＊D3	CL417	＊B4	FB801	B4	Q403	＊E3	R59	＊A3	R256	＊D3	R437	＊E4	R609	＊D3	RB2	＊C3		
C406	＊E4	CL3	＊C3	CL418	＊B4			Q404	＊E3	R60	＊C1	R257	C2	R438	＊E2	R610	＊B2	RB3	B3		
C407	＊E4	CL4	＊C3	CL601	＊D4	IC2	＊B3	Q405	＊E3	R61	＊C3	R258	D2	R439	＊E2	R611	B2	RB4	B3		
C408	＊E4	CL5	＊D3	CL602	＊D4	IC3	＊B3	Q406	＊E3	R62	＊C3	R259	D2	R440	E3	R612	B2	RB5	B3		
C409	＊E4	CL6	＊C3	CL603	＊D4	IC4	＊C3	Q407	＊E3	R63	＊C3	R260	＊D2	R441	E3	R613	B2	RB6	B3		
C410	＊E4	CL7	＊C3	CL604	＊D4	IC6	＊C3	Q408	＊E3	R64	＊C3	R261	＊D2	R442	B4	R614	B2	RB7	B3		
C411	＊B4	CL8	＊C4	CL605	＊D4	IC200	＊C1	Q409	＊E3	R65	＊C4	R262	＊E1	R443	B4	R615	＊B2	RB8	B3		
C412	＊B4	CL9	＊C4	CL606	＊B4	IC201	＊B1	Q410	＊E3	R66	B3	R263	＊E1	R444	E4	R616	＊C4	RB9	B3		
C413	＊B4	CL10	＊C4	CL607	＊B4	IC202	＊E1	Q411	＊E3	R67	＊C2	R264	＊E1	R445	E3	R617	＊D4	RB10	＊C3		
C414	＊B4	CL11	＊C4	CL608	＊B4	IC203	B2	Q412	＊E3	R68	＊C3	R265	＊E1	R446	E3	R618	＊A2	RB11	＊C3		
C415	＊B4	CL12	＊B4	CL609	＊D4	IC204	＊D1	Q413	＊E3	R69	＊C2	R266	＊E1	R447	E3	R619	＊C4	RB12	＊A3		
C416	＊B4	CL13	＊B4	CL610	＊D4	IC205	B1	Q414	＊E3	R70	＊B3	R267	＊E1	R448	E3	R620	＊D4	RB202	D2		
C417	＊B4	CL14	＊B4	CL611	＊D4	IC206	D2	Q415	＊E3	R71	＊A3	R268	＊C2	R449	E3	R621	＊D4	RB203	＊C1		
C418	＊B4	CL15	＊B4	CL612	＊D4	IC207	D3	Q501	＊B2	R72	B3	R269	C2	R450	E3	R622	＊D4	RB204	＊B1		
C419	＊E4	CL16	＊C4	CL613	＊D4	IC208	D2	Q502	＊B2	R73	B3	R270	C2	R451	＊E3	R623	＊A2	RB207	＊B1		
C420	＊E4	CL17	＊C4	CL614	＊D4	IC209	C2	Q504	＊D3	R74	＊A3	R271	＊E2	R452	＊E3	R624	＊D3	RB208	C1		
C421	＊E2	CL18	＊C4	CL615	＊D4	IC210	＊D2	Q505	＊D3	R75	＊B3	R272	＊E2	R453	E3	R625	＊D3	RB209	C1		
C422	E4	CL19	＊C4	CL616	＊D4	IC300	A1	Q506	＊D3	R76	＊B3	R273	＊E2	R454	E3	R626	＊D4	RB210	B1		
C423	E3	CL20	＊C4	CL708	＊D4	IC301	B1	Q507	＊D3	R77	＊B3	R274	＊D1	R455	＊E4	R627	＊D3	RB211	B1		

FP-118
SUFFIX: -11, -12

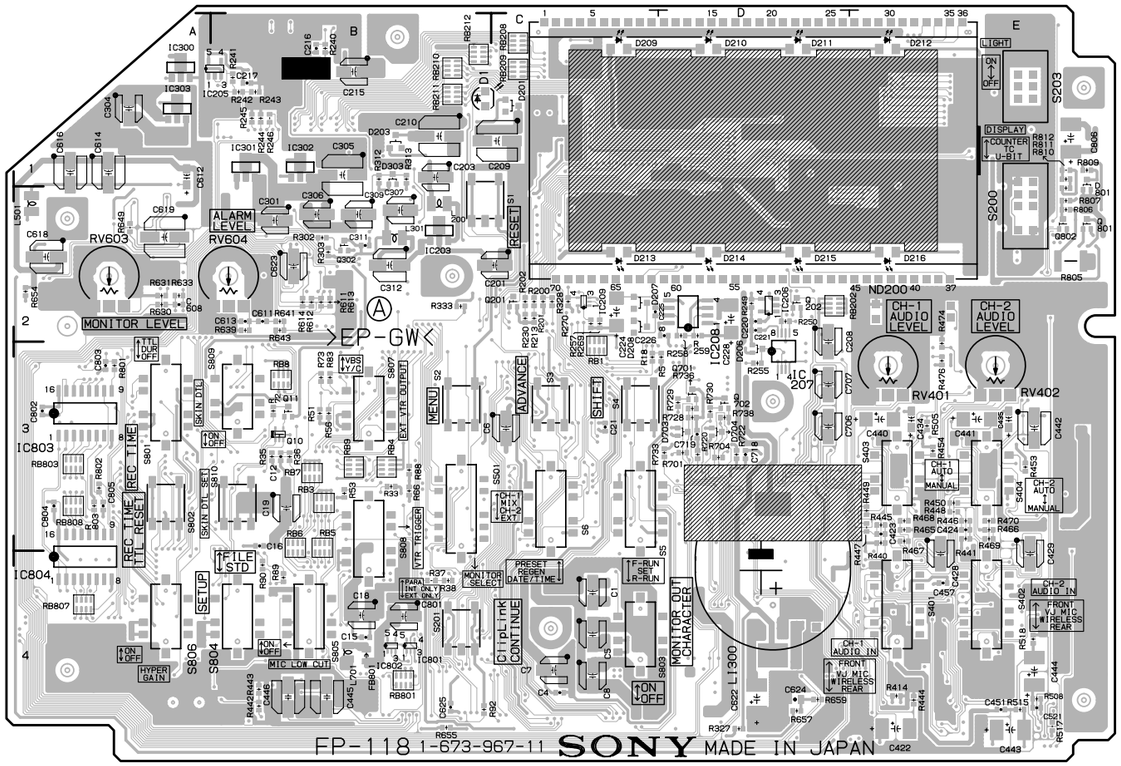

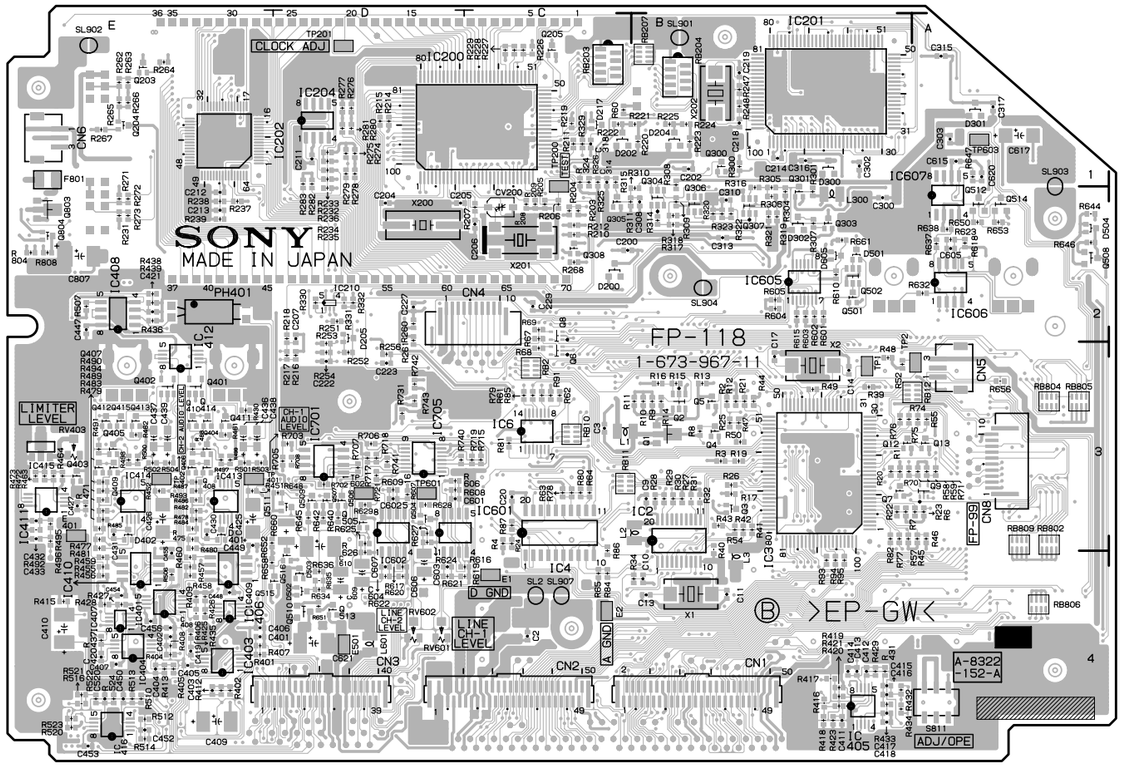

FP-118 **-A SIDE-**
SUFFIX: -11, 12

FP-118 **-B SIDE-**
SUFFIX: -11, 12

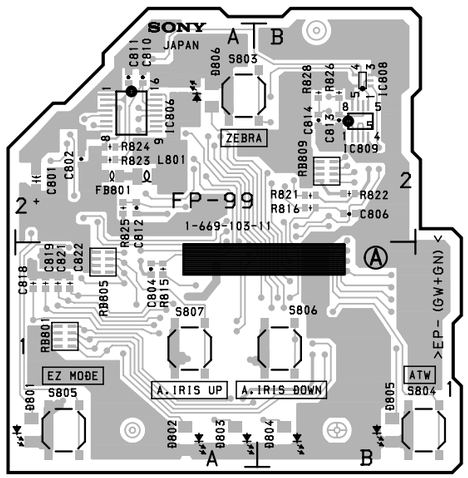

FP-99 -A SIDE-
SUFFIX: -11

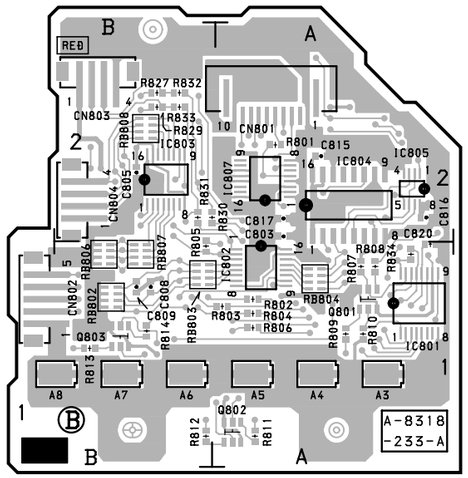

FP-99 -B SIDE-
SUFFIX: -11

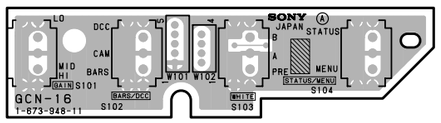

GCN-16 -A SIDE-
SUFFIX: -11

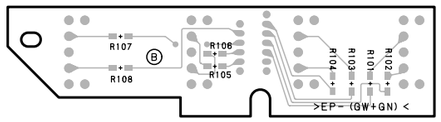

GCN-16 -B SIDE-
SUFFIX: -11

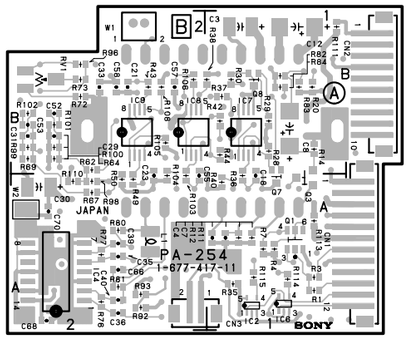

PA-254 -A SIDE-
SUFFIX: -11

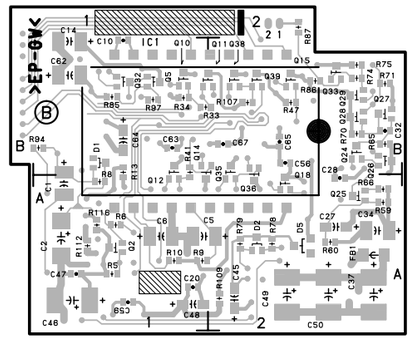

PA-254 -B SIDE-
SUFFIX: -11

PA-254(1-677-417-11)

C1	*A1	C34	*A2	C65	*B2	IC9	B2	Q32	*B1	R29	B1	R67	A2	R94	*B1	RV1	B2
C2	*A1	C35	A2	C66	A2			Q33	*B2	R30	B1	R69	B2	R96	B2		
C3	B1	C36	A2	C67	*B2	L1	A2	Q35	*B2	R33	*B1	R70	*B2	R97	*B1	W1	B2
C4	A1	C37	*A2	C68	A2			Q36	*B2	R34	*B1	R71	*B2	R98	A2	W2	A2
C5	*A1	C39	A2	C70	A2	Q1	A1	Q38	*B2	R35	A1	R72	B2	R99	B2		
C6	*A1	C40	A2			Q2	*A1	Q39	*B2	R36	A1	R73	B2	R100	B2	*:B SIDE	
C7	A1	C45	*A2	CN1	A1	Q3	A1			R37	B1	R74	*B2	R101	B2		
C8	B1	C46	*A1	CN2	B1	Q5	*B1	R1	A1	R38	B1	R75	*B2	R102	B2		
C10	*B1	C47	*A1	CN3	A2	Q7	A1	R3	A1	R40	A1	R76	A2	R103	A2		
C12	B1	C48	*A1			Q8	B1	R4	A1	R41	*B1	R77	A2	R104	A2		
C14	*B1	C49	*A2	D1	*B1	Q10	*B1	R5	*A1	R42	B1	R78	*A2	R105	B2		
C18	A1	C50	*A2	D2	*A2	Q11	*B1	R6	*A1	R43	B2	R79	*A2	R106	B2		
C20	*A1	C52	B2	D5	*A2	Q12	*B1	R7	A1	R44	B1	R80	A2	R107	*B2		
C21	B2	C53	B2			Q14	*B1	R8	*A1	R47	*B2	R81	A2	R108	B2		
C23	A2	C55	A2	FB1	*A2	Q15	*B2	R9	*A1	R49	A2	R82	B1	R109	*A2		
C27	*A2	C56	*B2			Q18	*A2	R10	*A1	R50	A2	R83	B1	R110	A2		
C28	*A2	C57	B2	IC1	*B2	Q24	*B2	R11	A1	R59	*A2	R84	B1	R111	B1		
C29	B2	C58	B2	IC2	A1	Q25	*A2	R12	A1	R60	*A2	R85	*B1	R112	*A1		
C30	A2	C59	*A1	IC4	A2	Q26	*B2	R13	*B1	R62	B2	R86	*B2	R113	A1		
C31	B2	C62	*B1	IC6	A1	Q27	*B2	R14	B1	R64	B2	R87	*B2	R114	A1		
C32	*B2	C63	*B1	IC7	B1	Q28	*B2	R20	B1	R65	*B2	R92	A2	R115	A1		
C33	B2	C64	*B1	IC8	B2	Q29	*B2	R28	B1	R66	*A2	R93	A2	R116	*A1		

PA-255, PA-256

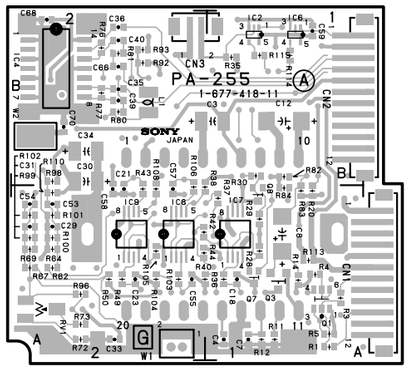

PA-255 -A SIDE-
SUFFIX: -11

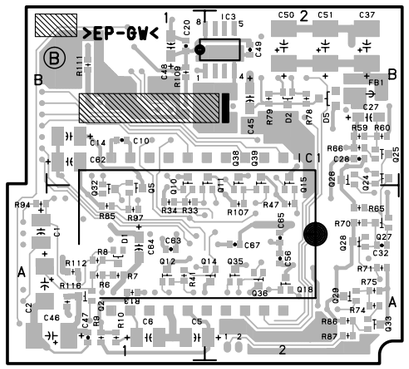

PA-255 -B SIDE-
SUFFIX: -11

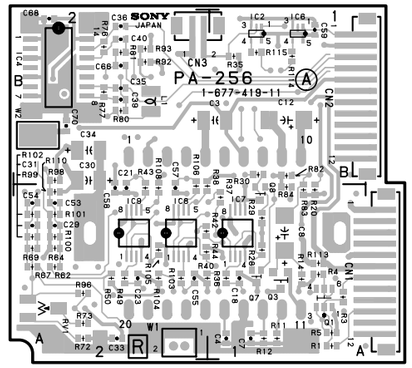

PA-256 -A SIDE-
SUFFIX: -11

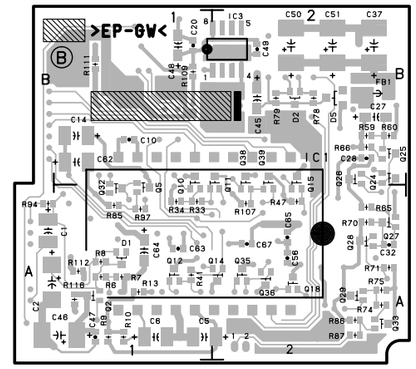

PA-256 -A SIDE-
SUFFIX: -11

PA-255(1-677-418-11)

C1	*A1	C34	B2	C64	*A1	IC6	B1	Q27	*A2	R14	A1	R64	A2	R87	*A2	R114	B1
C2	*A1	C35	B2	C65	*A2	IC7	A1	Q28	*A2	R20	A1	R65	*A2	R92	B2	R115	B1
C3	B1	C36	B2	C66	B2	IC8	A2	Q29	*A2	R28	A1	R66	*B2	R93	B2	R116	*A1
C4	A1	C37	*B2	C67	*A2	IC9	A2	Q32	*A1	R29	A1	R67	A2	R94	*A1		
C5	*A1	C39	B2	C68	B2			Q33	*A2	R30	B1	R69	A2	R96	A2	RV1	A2
C6	*A1	C40	B2	C70	B2	L1	B2	Q35	*A2	R33	*A1	R70	*A2	R97	*A1		
C7	A1	C45	*B2					Q36	*A2	R34	*A1	R71	*A2	R98	B2	W1	A2
C8	A1	C46	*A1	CN1	A1	Q1	A1	Q38	*B2	R35	B1	R72	A2	R99	A2	W2	B2
C10	*B1	C47	*A1	CN2	B1	Q2	*A1	Q39	*B2	R36	A1	R73	A2	R100	A2		
C12	B1	C48	*B1	CN3	B2	Q3	A1			R37	A1	R74	*A2	R101	A2	*:B SIDE	
C14	*B1	C49	*B2			Q5	*A1	R1	A1	R38	A2	R75	*A2	R102	A2		
C18	A1	C50	*B2	D1	*A1	Q7	A1	R3	A1	R40	A2	R76	B2	R103	A2		
C20	*B1	C51	*B2	D2	*A2	Q8	A1	R4	A1	R41	*A1	R77	B2	R104	A2		
C21	A2	C53	A2	D2	*B2	Q10	*B1	R5	A1	R42	A2	R78	*B2	R105	A2		
C23	A2	C54	A2	D5	*B2	Q11	*B2	R6	*A1	R43	A2	R79	*B2	R106	A2		
C27	*B2	C55	A2			Q12	*A1	R7	*A1	R44	A2	R80	B2	R107	*A2		
C28	*B2	C56	*A2	FB1	*B2	Q14	*A2	R8	*A1	R47	*A2	R81	B2	R108	A2		
C29	A2	C57	A2			Q15	*B2	R9	*A1	R49	A2	R82	B1	R109	*B1		
C30	B2	C58	A2	IC1	*B2	Q18	*A2	R10	*A1	R50	A2	R83	A1	R110	A2		
C31	A2	C59	B1	IC2	B1	Q24	*B2	R11	A1	R59	*B2	R84	A1	R111	*B1		
C32	*A2	C62	*B1	IC3	*B2	Q25	*B2	R12	A1	R60	*B2	R85	*A1	R112	*A1		
C33	A2	C63	*A1	IC4	B2	Q26	*B2	R13	*A1	R62	A2	R86	*A2	R113	A1		

PA-256(1-677-419-11)

C1	*A1	C34	B2	C64	*A1	IC7	A1	Q28	*A2	R20	A1	R65	*A2	R92	B2	R115	B1
C2	*A1	C35	B2	C65	*A2	IC8	A2	Q29	*A2	R28	A1	R66	*B2	R93	B2	R116	*A1
C3	B1	C36	B2	C66	B2	IC9	A2	Q32	*A1	R29	A1	R67	A2	R94	*A1		
C4	A1	C37	*B2	C67	*A2			Q33	*A2	R30	B1	R69	A2	R96	A2	RV1	A2
C5	*A1	C39	B2	C68	B2	L1	B2	Q35	*A2	R33	*A1	R70	*A2	R97	*A1		
C6	*A1	C40	B2	C70	B2			Q36	*A2	R34	*A1	R71	*A2	R98	B2	W1	A2
C7	A1	C45	*B2			Q1	A1	Q38	*B2	R35	B1	R72	A2	R99	A2	W2	B2
C8	A1	C46	*A1	CN1	A1	Q2	*A1	Q39	*B2	R36	A1	R73	A2	R100	A2		
C10	*B1	C47	*A1	CN2	B1	Q3	A1			R37	A1	R74	*A2	R101	A2	*:B SIDE	
C12	B1	C48	*B1	CN3	B2	Q5	*A1	R1	A1	R38	A2	R75	*A2	R102	A2		
C14	*B1	C49	*B2			Q7	A1	R3	A1	R40	A2	R76	B2	R103	A2		
C18	A1	C50	*B2	D1	*A1	Q8	A1	R4	A1	R41	*A1	R77	B2	R104	A2		
C20	*B1	C51	*B2	D2	*B2	Q10	*B1	R5	A1	R42	A2	R78	*B2	R105	A2		
C21	A2	C53	A2	D5	*B2	Q11	*B2	R6	*A1	R43	A2	R79	*B2	R106	A2		
C23	A2	C54	A2			Q12	*A1	R7	*A1	R44	A2	R80	B2	R107	*A2		
C27	*B2	C55	A2	FB1	*B2	Q14	*A2	R8	*A1	R47	*A2	R81	B2	R108	A2		
C28	*B2	C56	*A2			Q15	*B2	R9	*A1	R49	A2	R82	B1	R109	*B1		
C29	A2	C57	A2	IC1	*B2	Q18	*A2	R10	*A1	R50	A2	R83	A1	R110	A2		
C30	B2	C58	A2	IC2	B1	Q24	*B2	R11	A1	R59	*B2	R84	A1	R111	*B1		
C31	A2	C59	B1	IC3	*B2	Q25	*B2	R12	A1	R60	*B2	R85	*A1	R112	*A1		
C32	*A2	C62	*B1	IC4	B2	Q26	*B2	R13	*A1	R62	A2	R86	*A2	R113	A1		
C33	A2	C63	*A1	IC6	B1	Q27	*A2	R14	A1	R64	A2	R87	*A2	R114	B1		

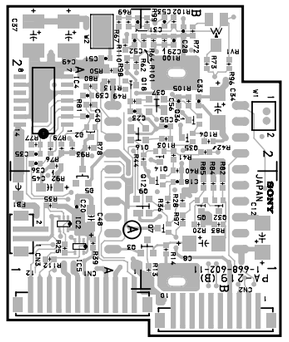

PA-219 -A SIDE-
SUFFIX: -11
FOR DSR-500WS/500WSP

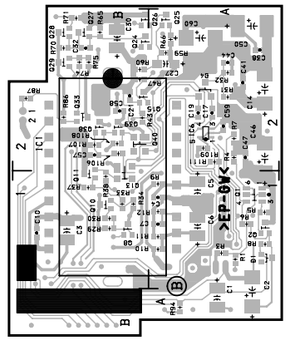

PA-219 -B SIDE-
SUFFIX: -11
FOR DSR-500WS/500WSP

PA-219(1-668-602-11)

CN1	A1	C40	A2	Q13	⁎B1	R28	B1	R75	⁎B2	R114	A1
CN2	B1	C41	⁎A2	Q14	B2	R29	⁎B1	R76	A2	R115	A1
CN3	A1	C44	⁎A2	Q15	⁎B2	R30	⁎B1	R77	A2		
C1	⁎A1	C45	A1	Q16	A2	R31	⁎A2	R78	A2	RV1	B2
C2	⁎A1	C46	⁎A2	Q18	A2	R32	⁎A2	R79	A2		
C3	⁎B1	C47	⁎A2	Q24	⁎B2	R33	⁎B1	R80	A2	W1	B2
C4	⁎A1	C48	A1	Q25	⁎A2	R34	⁎B1	R81	A2	W2	A2
C5	⁎A1	C49	A2	Q26	⁎B2	R35	A1	R82	B1		
C6	⁎A1	C50	⁎A2	Q27	⁎B2	R36	B1	R83	B1	⁎: B SIDE	
C7	⁎A1	C51	A2	Q28	⁎B2	R37	⁎B1	R84	B1		
C8	B1	C55	B2	Q29	⁎B2	R38	⁎B1	R85	B1		
C10	⁎B1	C56	B2	Q32	B1	R39	A1	R86	⁎B2		
C12	B1	C57	⁎B2	Q33	⁎B2	R40	B2	R87	⁎B2		
C14	⁎A2	C58	⁎B2	Q35	B2	R41	B2	R92	A2		
C17	⁎A2	C59	⁎A2	Q36	B2	R42	B2	R93	A2		
C18	B1	D1	⁎A1	Q37	B2	R43	⁎B2	R94	⁎A1		
C19	⁎A2	D2	A2	Q38	⁎B2	R44	B2	R97	B1		
C20	A1	D4	⁎A2	Q39	⁎B2	R47	⁎B2	R98	A2		
C21	⁎B2	D5	A1	Q40	⁎B2	R49	A2	R99	B2		
C23	A2	FB1	A1	R1	⁎A1	R50	A2	R100	B2		
C27	⁎A2	IC2	A1	R3	⁎A1	R59	⁎A2	R101	B2		
C28	B2	IC4	A2	R4	⁎A2	R60	⁎B2	R102	B2		
C29	B2	IC6	⁎A2	R5	⁎A1	R62	A2	R103	B2		
C30	⁎B2	Q1	⁎A1	R6	⁎A1	R64	B2	R104	B2		
C31	A2	Q2	⁎A1	R7	⁎A2	R65	⁎B2	R105	B2		
C32	⁎B2	Q3	B1	R8	⁎A1	R66	⁎A2	R106	⁎B2		
C33	B2	Q5	B1	R9	⁎A1	R67	A2	R107	⁎A2		
C34	B2	Q7	B1	R10	⁎A1	R69	A2	R108	⁎B2		
C35	A2	Q8	⁎B1	R11	⁎A1	R70	⁎B2	R109	⁎A2		
C36	A2	Q9	B1	R12	⁎A1	R71	⁎B2	R110	A2		
C37	A2	Q10	⁎B1	R13	B1	R72	B2	R111	B1		
C38	⁎A2	Q11	⁎B1	R14	B1	R73	B2	R112	A1		
C39	A2	Q12	B1	R20	B1	R74	⁎B2	R113	A2		

PA-220, PA-221

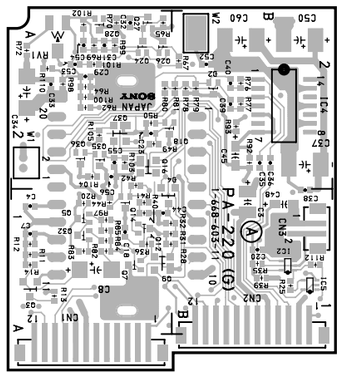

PA-220 -A SIDE-
SUFFIX: -11
FOR DSR-500WS/500WSP

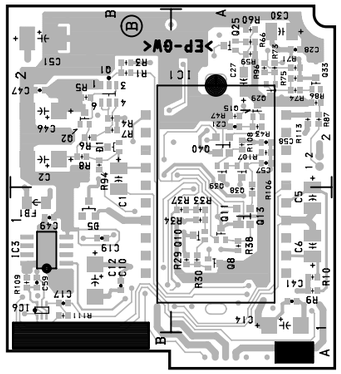

PA-220 -B SIDE-
SUFFIX: -11
FOR DSR-500WS/500WSP

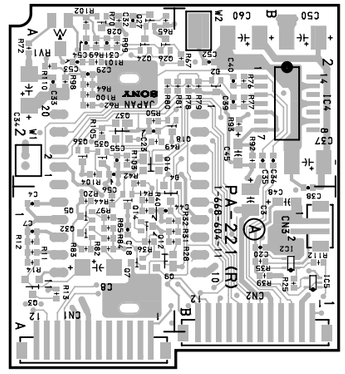

PA-221 -A SIDE-
SUFFIX: -11
FOR DSR-500WS/500WSP

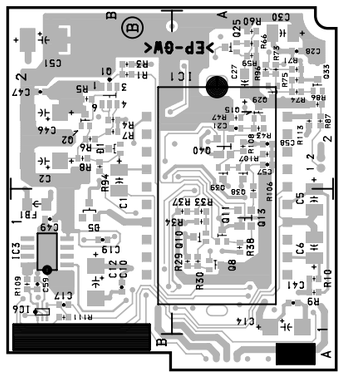

PA-221 -B SIDE-
SUFFIX: -11
FOR DSR-500WS/500WSP

PA-220(1-668-603-11)

CN1	A1	C40	B2	Q11	∗A1	R14	A1	R75	∗A2		
CN2	B1	C41	∗A1	Q12	A1	R20	A1	R76	B2		
CN3	B1	C44	A1	Q13	∗A1	R28	A1	R77	B2		
C1	∗B2	C45	B2	Q14	A1	R29	∗A1	R78	B2		
C2	∗B2	C46	∗B2	Q15	∗A2	R30	∗A1	R79	B2		
C3	B1	C47	∗B2	Q16	A2	R31	A1	R80	A2		
C4	A1	C48	B1	Q18	A2	R32	A1	R81	B2		
C5	∗A1	C49	∗B1	Q24	A2	R33	∗A1	R82	A1		
C6	∗A1	C50	B2	Q25	∗A2	R34	∗A1	R83	A1		
C7	A1	C51	∗B2	Q26	A2	R35	B1	R84	A1		
C8	A1	C52	B2	Q27	A2	R36	A1	R85	A1		
C10	∗B1	C55	A2	Q28	A2	R37	∗A1	R86	∗A2		
C12	∗B1	C56	A2	Q29	∗A2	R38	∗A1	R87	∗A2		
C14	∗A1	C57	∗A2	Q32	A1	R39	B1	R92	B2		
C17	∗B1	C58	∗A2	Q33	∗A2	R40	A1	R93	B2		
C18	A1	C59	∗B1	Q35	A2	R41	A1	R94	∗B2		
C19	∗B1	D1	∗B2	Q36	A2	R42	A2	R96	∗A2		
C20	B1	D2	B2	Q37	A2	R43	∗A2	R97	A1		
C21	∗A2	D4	A1	Q38	∗A2	R44	A1	R99	A2		
C23	A2	D5	∗B1	Q39	∗A2	R47	∗A2	R103	A2		
C27	∗A2	FB1	∗B1	Q40	∗A2	R49	A2	R104	A2		
C28	∗A2	IC2	B1	R1	∗B2	R50	A2	R105	A2		
C29	A2	IC3	∗B1	R3	∗B2	R59	∗A2	R106	∗A1		
C30	∗A2	IC4	B2	R4	∗B2	R60	∗A2	R107	∗A2		
C31	A2	IC6	∗B1	R5	∗B2	R62	A2	R108	∗A2		
C32	A2	Q1	∗B2	R6	∗B2	R64	A2	R109	∗B1		
C33	A2	Q2	∗B2	R7	∗B2	R65	A2	R110	A2		
C34	A2	Q3	A1	R8	∗B2	R66	∗A2	R112	B1		
C35	B2	Q5	A1	R9	∗A1	R67	B2	R113	∗A2		
C36	B2	Q7	A1	R10	∗A1	R69	A2	W1	A2		
C37	B2	Q8	∗A1	R11	A1	R70	A2				
C38	B1	Q9	A1	R12	A1	R71	∗A2				
C39	B2	Q10	∗A1	R13	A1	R74	∗A2	∗: B SIDE			

PA-221(1-668-604-11)

CN1	A1	C40	A2	Q13	∗B1	R20	B1	R74	∗B2		
CN2	B1	C41	∗A2	Q14	B2	R28	B1	R75	∗B2		
CN3	A1	C44	∗A2	Q15	∗B2	R29	∗B1	R76	A2		
C1	∗A1	C45	A1	Q16	A2	R30	∗B1	R77	A2		
C2	∗A1	C46	∗A2	Q18	A2	R31	∗A2	R78	A2		
C3	∗B1	C47	∗A2	Q24	∗B2	R32	∗A2	R79	A2		
C4	∗A1	C48	A1	Q25	∗A2	R33	∗B1	R80	A2		
C5	∗A1	C49	A2	Q26	∗B2	R34	∗B1	R81	A2		
C6	∗A1	C50	∗A2	Q27	∗B2	R35	A1	R82	B1		
C7	∗A1	C51	A2	Q28	∗B2	R36	B1	R83	B1		
C8	B1	C55	B2	Q29	∗B2	R37	∗B1	R84	B1		
C10	∗B1	C56	B2	Q32	B1	R38	∗B1	R85	B1		
C12	B1	C57	∗B2	Q33	∗B2	R39	A1	R86	∗B2		
C14	∗A2	C58	∗B2	Q35	B2	R40	B2	R87	∗B2		
C17	∗A2	C59	∗A2	Q36	B2	R41	B2	R92	A2		
C18	B1	D1	∗A1	Q37	B2	R42	B2	R93	A2		
C19	∗A2	D2	A2	Q38	∗B2	R43	∗B2	R94	∗A1		
C20	A1	D4	∗A2	Q39	∗B2	R44	B2	R97	B1		
C21	∗B2	D5	A1	Q40	∗B2	R47	∗B2	R99	B2		
C23	A2	FB1	A1	RV1	B2	R49	A2	R103	B2		
C27	∗A2	IC2	A1	R1	∗A1	R50	A2	R104	B2		
C28	B2	IC4	A2	R3	∗A1	R59	∗A2	R105	B2		
C29	B2	IC6	∗A2	R4	∗A2	R60	∗B2	R106	∗B2		
C30	∗B2	Q1	∗A1	R5	∗A1	R62	A2	R107	∗B2		
C31	A2	Q2	∗A1	R6	∗A1	R64	B2	R108	∗B2		
C32	∗B2	Q3	B1	R7	∗A2	R65	∗B2	R109	∗A2		
C33	B2	Q5	B1	R8	∗A1	R66	∗A2	R110	A2		
C34	B2	Q7	B1	R9	∗A1	R67	A2	R112	A1		
C35	A2	Q8	∗B1	R10	∗A1	R69	A2	R113	A2		
C36	A2	Q9	B1	R11	∗A1	R70	∗B2	W1	B2		
C37	A2	Q10	∗B1	R12	∗A1	R71	∗B2				
C38	∗A2	Q11	∗B1	R13	B1	R72	B2				
C39	A2	Q12	B1	R14	B1	R73	B2	∗: B SIDE			

5-19 (a)

KY-405, LE-221, RP-91

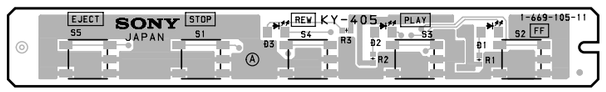

KY-405 **-A SIDE-**
SUFFIX : -11

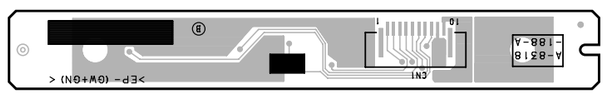

KY-405 **-B SIDE-**
SUFFIX : -11

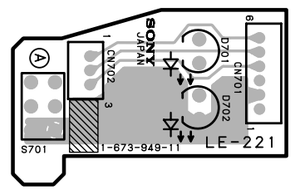

LE-221 **-A SIDE-**
SUFFIX: -11

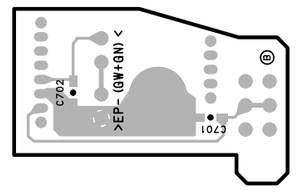

LE-221 **-B SIDE-**
SUFFIX: -11

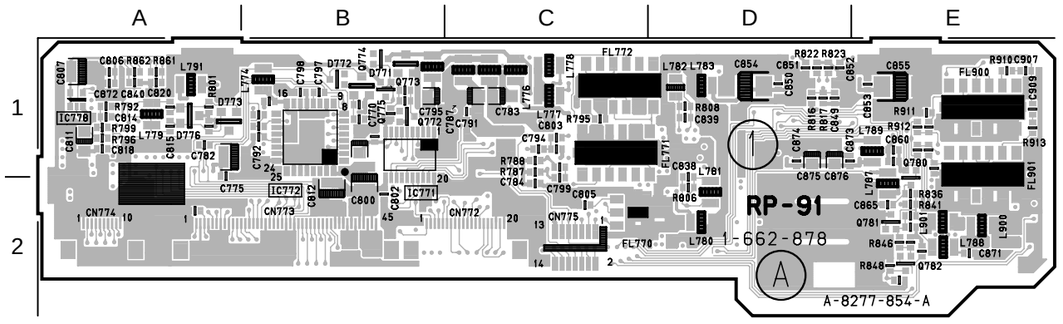

RP-91 **-A SIDE-**
SUFFIX : -12

RP-91(1-662-878-12)

CN771	＊E2	D776	A1	IC773	＊C1	L774	B1	L789	E1	Q778	＊D2
CN772	C2			IC774	＊A1	L776	C1	L791	A1	Q779	＊D2
CN773	B2	FL770	D2	IC775	＊D1	L777	C1	L900	E2	Q780	E2
CN774	＊A2	FL771	D1	IC777	＊E1	L778	C1	L901	E2	Q781	E2
CN775	＊C2	FL772	D1	IC778	A1	L779	A1			Q782	E2
		FL900	E1	IC900	＊E1	L780	D2	Q772	B1	Q784	＊C1
D771	B1	FL901	E1	IC901	＊E2	L781	D2	Q773	B1	Q900	＊E1
D772	B1					L782	D1	Q774	B1	Q901	＊E1
D773	B1	IC770	＊B2	L770	C1	L783	D1	Q775	B1		
D774	D2	IC771	B1	L772	C1	L787	E2	Q776	＊D2		
D775	E2	IC772	B1	L773	C1	L788	E2	Q777	＊D2	＊ : B SIDE	

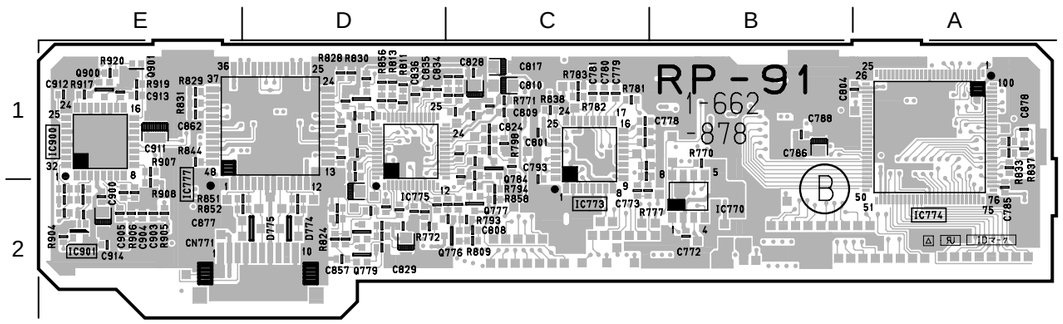

RP-91 **-B SIDE-**
SUFFIX : -12

5-20

HN-227, MT-114, SE-295, SE-297

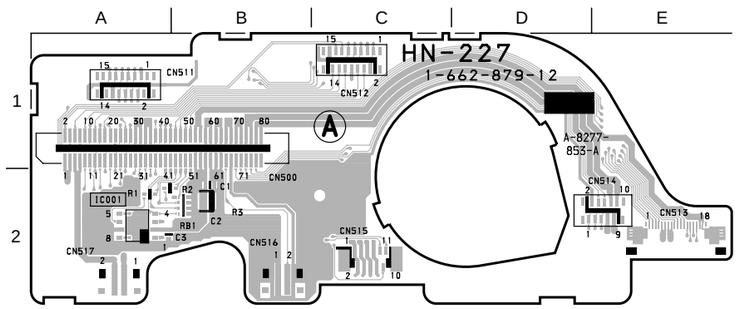

HN-227 **-A SIDE-**
SUFFIX : -12

HN-227(1-662-879-12)

CN500	B1
CN511	A1
CN512	C1
CN513	E2
CN514	D2
CN515	C2
CN516	B2
CN517	A2
IC1	A2
RB1	B2

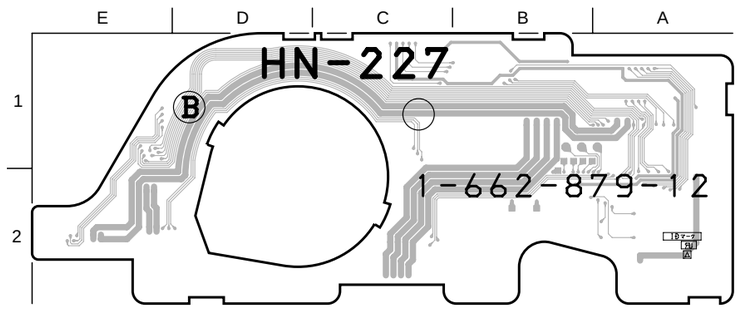

HN-227 **-B SIDE-**
SUFFIX : -12

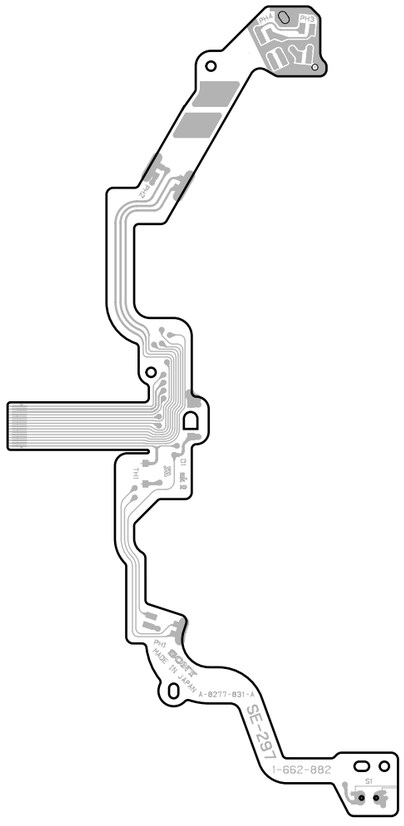

SE-297 **-A SIDE-**
SUFFIX : -13

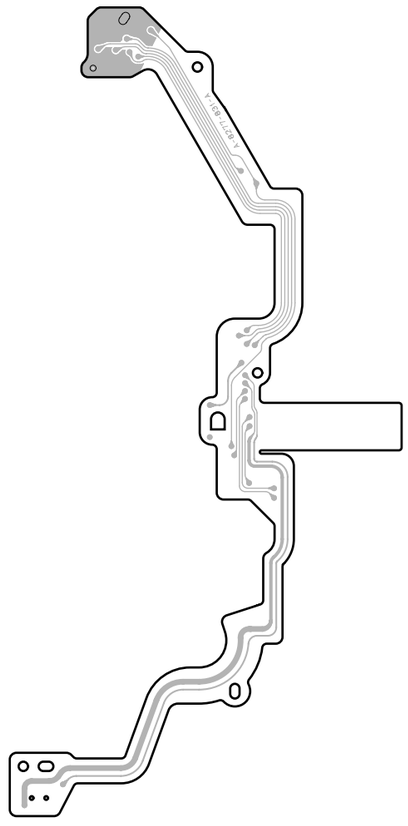

SE-297 **-B SIDE-**
SUFFIX : -13

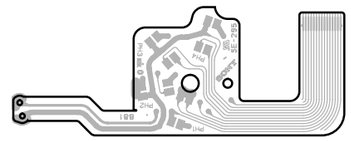

SE-295 **-A SIDE-**
SUFFIX : -13, 14

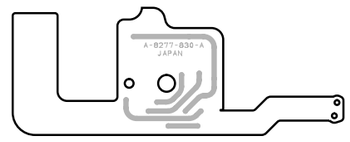

SE-295 **-B SIDE-**
SUFFIX : -13, 14

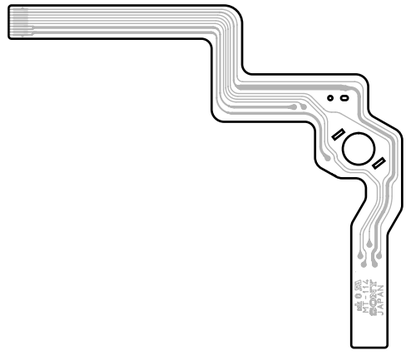

MT-114 **-A SIDE-**
SUFFIX : -12

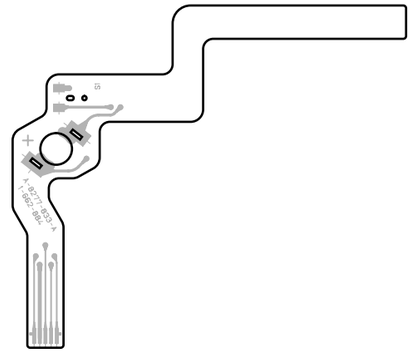

MT-114 **-B SIDE-**
SUFFIX : -12

PSW-71, PS-570, SE-511

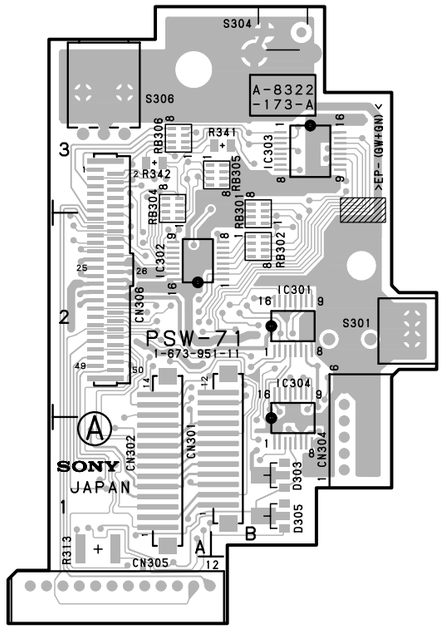

PSW-71 -A SIDE-

SUFFIX: -11

PSW-71(1-673-951-11)

C301	＊A3	Q308	＊A3	R330	＊A1						
C302	＊A2	Q309	＊A3	R331	＊A1						
C303	＊A2	Q310	＊A3	R333	＊A2						
C304	＊A2			R334	＊A3						
C305	＊A1	R301	＊A2	R335	＊A2						
C306	＊A1	R302	＊A3	R336	＊A2						
C307	＊A1	R303	＊A3	R337	＊A2						
C308	＊A2	R304	＊A2	R338	＊A3						
C309	＊A3	R305	＊A2	R339	＊A1						
C310	＊A3	R306	＊A2	R340	＊A2						
		R307	＊A2	R341	B3						
CN301	B1	R308	＊A1	R342	A3						
CN302	A1	R309	＊A2	R343	＊A3						
CN304	B1	R310	＊A2								
CN305	A1	R311	＊A2	RB301	B2						
CN306	A2	R312	＊A2	RB302	B2						
		R313	A1	RB304	A3						
D301	＊A2	R314	＊A2	RB305	B3						
D302	＊A1	R315	＊A1	RB306	A3						
D303	B1	R316	＊A1								
D304	＊A1	R318	＊A1	S301	B2						
D305	B1	R319	＊A2	S304	B3						
		R320	＊A1	S306	A3						
IC301	B2	R321	＊A2								
IC302	A2	R322	＊A2	＊: B SIDE							
IC303	B3	R323	＊A3								
IC304	B1	R324	＊A3								
		R325	＊A3								
Q301	＊A1	R326	＊A3								
Q302	＊A2	R327	＊A3								
Q303	＊A2	R328	＊A3								
Q304	＊A2	R329	＊A3								

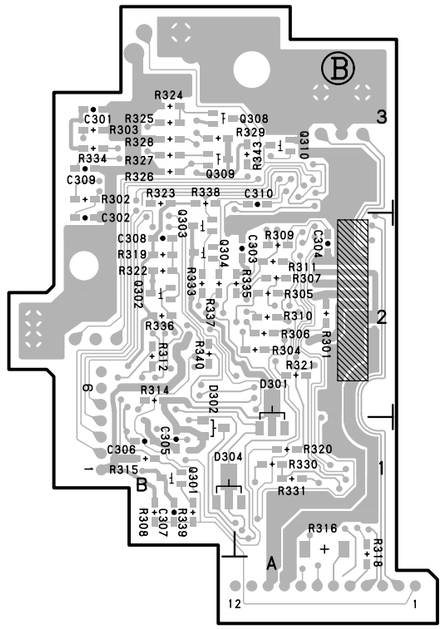

PSW-71 -B SIDE-

SUFFIX: -11

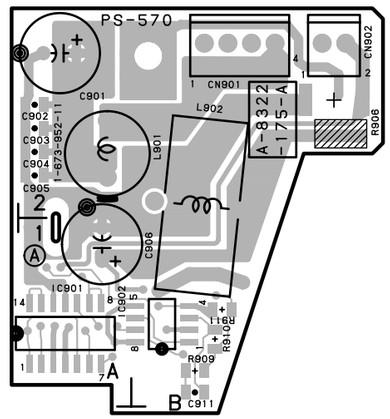

PS-570 -A SIDE-

SUFFIX: -11

PS-570(1-673-952-11)

C901	A2	C914	＊A2	L901	A2	R903	＊A2	R916	＊A1		
C902	A2	C915	＊A1	L902	B2	R904	＊A2	R917	＊A1		
C903	A2					R905	＊A2	R918	＊A1		
C904	A2	CN901	B2	Q901	＊A2	R906	B2	R919	＊A1		
C905	A2	CN902	B2	Q903	＊A2	R907	＊A1	R920	＊A2		
C906	A1			Q904	＊A2	R908	＊A1				
C907	＊A1	D901	＊A1	Q905	＊A2	R909	B1	＊: B SIDE			
C908	＊A2	D902	＊A2	Q906	＊A2	R910	B1				
C909	＊A1			Q907	＊A1	R911	B1				
C910	＊A1	FL901	＊A2	Q908	＊A2	R912	＊A1				
C911	B1					R913	＊A1				
C912	＊A1	IC901	A1	R901	＊A2	R914	＊A1				
C913	＊A2	IC902	B1	R902	＊A2	R915	＊A1				

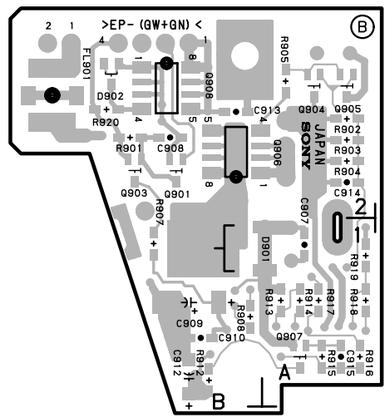

PS-570 -B SIDE-

SUFFIX: -11

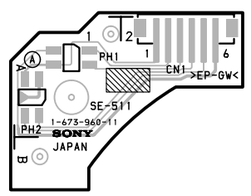

SE-511 -A SIDE-

SUFFIX: -11

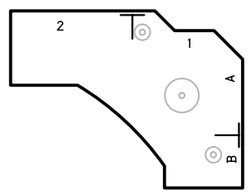

SE-511 -B SIDE-

SUFFIX: -11

5-22

MB-833
SUFFIX: -12

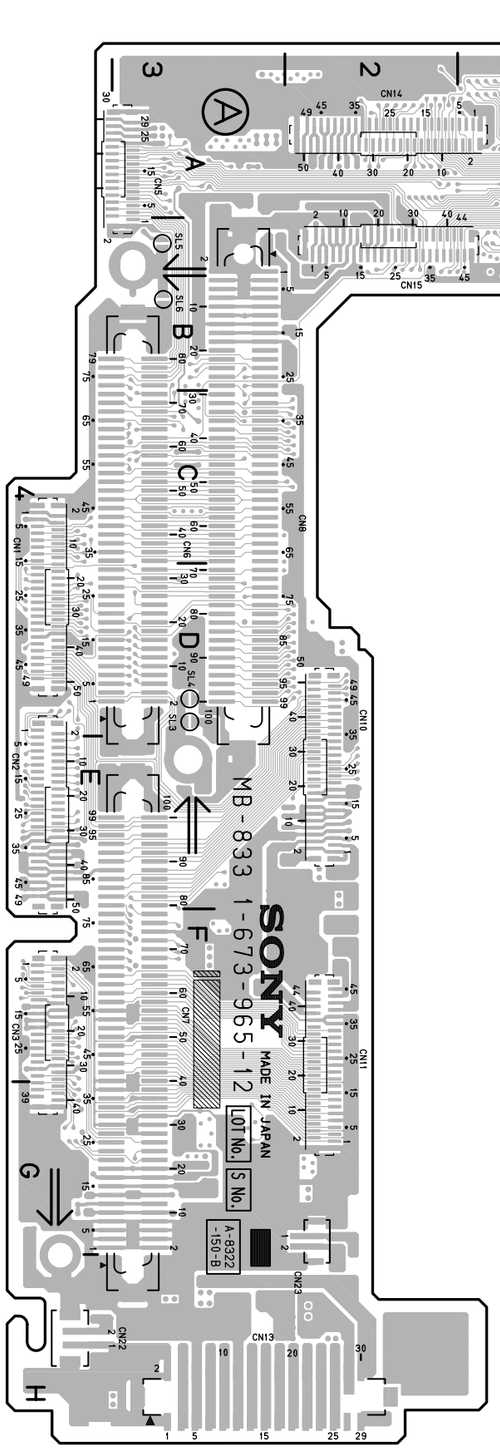

MB-833 -A SIDE-
SUFFIX: -12

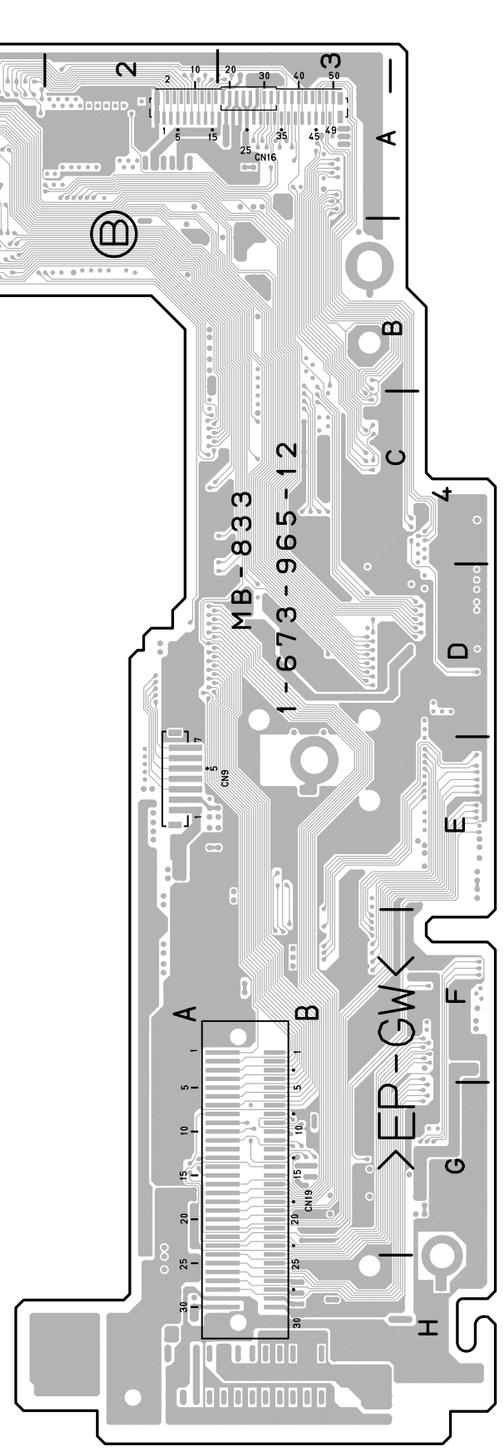

MB-833 -B SIDE-
SUFFIX: -12

MB-833(1-673-965-12)

CN1	D4
CN2	E4
CN3	F4
CN5	A3
CN6	C3
CN7	F3
CN8	C3
CN9	*E2
CN10	E2
CN11	F2
CN13	H3
CN14	A2
CN15	B2
CN16	*A3
CN19	*G3
CN20	*A1
CN22	H4
CN23	G2
SL3	D3
SL4	D3
SL5	B3
SL6	B3

*: B SIDE

MB-833
SUFFIX: -11

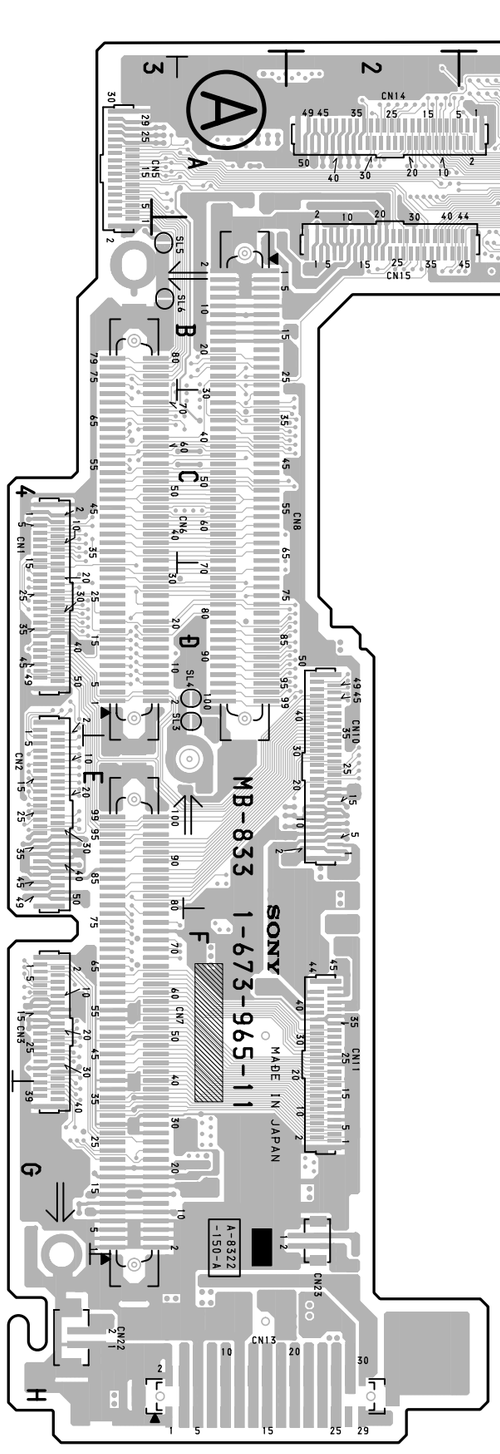

MB-833 -A SIDE-
SUFFIX: -11

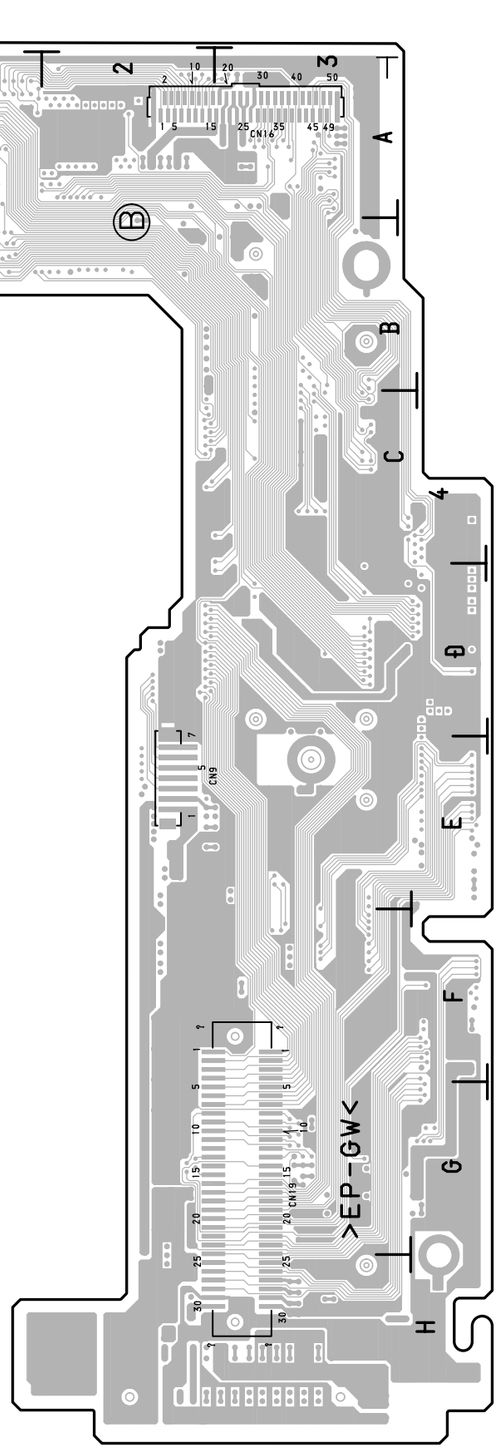

MB-833 -B SIDE-
SUFFIX: -11

MB-833(1-673-965-11)

CN1	D4
CN2	E4
CN3	F4
CN5	A4
CN6	C4
CN7	F4
CN8	C3
CN9	＊E2
CN10	E2
CN11	F2
CN13	H3
CN14	A2
CN15	B2
CN16	＊A3
CN19	＊G3
CN20	＊A1
CN22	H4
CN23	G2
SL3	D3
SL4	D3
SL5	B4
SL6	B4

＊: B SIDE

5-23 (a)

SV-213(1-673-983-12)

C1	C1	C504	D2	CL36	＊B4	CL504	＊D1	IC500	C2	R222	C2	R421	B3	R750	A2	TP302	A4
C2	A1	C505	D2	CL37	＊B4	CL505	＊D1	IC501	D3	R223	C2	R422	B2	R751	A2	TP304	A3
C3	A1	C506	D2	CL38	＊B4	CL506	＊D1	IC502	D3	R225	A2	R423	B3	R752	A1	TP400	C2
C4	A2	C507	D2	CL40	＊B4	CL507	＊D1	IC505	C1	R226	A2	R424	B3	R753	A1	TP401	C3
C5	C1	C508	D2	CL41	＊B4	CL508	＊D1	IC507	D3	R227	A2	R425	B3	R754	B1	TP501	D2
C6	B1	C509	D2	CL42	＊B4	CL1001	＊D1	IC508	D3	R228	A2	R426	C2	R759	B1	TP502	D2
C7	C1	C510	D2	CL43	＊B4	CL1002	＊D3	IC509	D3	R229	B2	R427	B3	R760	B1	TP503	C3
C8	C1	C512	D2	CL44	＊B4	CL1003	＊D3	IC510	D3	R230	B2	R428	B3	R761	B1	TP504	D2
C9	C1	C516	C4	CL45	＊B4	CL1300	＊A3	IC512	C4	R231	B2	R429	B2	R762	A2	TP505	D2
C10	C1	C517	C3	CL46	＊B4	CL1301	＊A3	IC702	B3	R232	B2	R430	B2	R763	A2	TP506	D2
C11	C1	C518	C4	CL47	＊B4	CL1302	＊A3	IC740	A1	R233	B2	R431	B3	R764	A2	TP507	A4
C13	D1	C520	C4	CL48	＊B4	CL1304	＊A3	IC741	A2	R234	B2	R432	B3	R765	A2	TP508	A4
C16	D1	C522	C4	CL49	＊B4	CL1400	＊C2	IC801	D4	R235	B2	R433	B3	R766	A2	TP509	C3
C17	D4	C524	D1	CL50	＊B4	CL1401	＊C3	IC802	D4	R236	B2	R434	B3	R767	A2	TP510	C3
C18	B1	C525	D1	CL51	＊B4	CL1502	＊D2	IC901	A2	R238	A3	R436	B3	R768	A2	TP701	B1
C200	D4	C526	C1	CL52	＊B4	CL1503	＊C4	IC902	A2	R239	A3	R437	B3	R769	A1	TP704	B1
C201	D4	C527	C2	CL56	＊B4	CL1504	＊D2	IC903	A1	R241	A3	R438	B3	R770	A1		
C202	D4	C528	C2	CL57	＊B4	CL1505	＊D2	IC904	A2	R242	A3	R439	B3	R771	B2	X500	C2
C203	C2	C529	C2	CL60	＊B4	CL1506	＊C2			R244	A2	R440	B3	R772	B2		
C204	B2	C530	C2	CL64	＊B4	CL1507	＊A4	L500	C4	R245	A2	R441	B3	R773	B2	＊: B SIDE	
C205	A2	C531	C2	CL65	＊B4	CL1508	＊A4	L501	C4	R246	A2	R442	B1	R774	B2		
C206	A2	C533	D3	CL67	＊B4	CL1509	＊C3	L502	C4	R247	A2	R443	C1	R775	B2		
C207	A3	C534	D3	CL68	＊B4	CL1510	＊C3	L700	B1	R248	A3	R444	C1	R776	B2		
C208	A2	C535	C3	CL69	＊B4	CL1901	＊C1	L740	B1	R249	A3	R445	C1	R777	B2		
C209	A2	C537	C4	CL71	＊B4	CL1902	＊D4	L741	B2	R250	A3	R501	C1	R778	B2		
C210	D1	C538	D3	CL72	＊B4	CL1903	＊D4			R251	A3	R502	C2	R801	D4		
C211	A2	C539	D3	CL73	＊B4			LND1	D1	R252	A3	R503	C2	R802	C4		
C212	A3	C700	A2	CL74	＊B4	CN500	＊B4			R253	A3	R504	D2	R805	D4		
C300	A4	C701	A1	CL75	＊B4	CN501	C4	Q700	A1	R254	A3	R505	C2	R806	D3		
C301	A4	C702	A1	CL77	＊B4	CN502	C4	Q701	B3	R255	A3	R513	C1	R810	D3		
C302	A4	C705	B1	CL80	＊B4	CN504	C1	Q740	B1	R300	A4	R514	C2	R811	C3		
C303	A4	C706	B1	CL104	＊C4	CN505	D1	Q745	B2	R301	A4	R515	C1	R812	C3		
C304	A4	C707	B1	CL105	＊C4			Q748	B2	R302	A4	R516	C1	R813	D3		
C305	A4	C740	A1	CL107	＊C4	D1	B1	Q749	C2	R303	A4	R517	C4	R814	D4		
C306	A4	C741	A2	CL108	＊C4	D2	B1	Q802	D3	R304	A4	R518	C3	R818	C3		
C309	A4	C742	A2	CL109	＊C4	D300	A3	Q803	C3	R305	A4	R519	C1	R820	C3		
C310	B4	C746	B1	CL110	＊C4	D302	B2	Q804	C3	R306	A3	R520	C1	R822	C3		
C311	B4	C747	B1	CL111	＊C4	D303	B2	Q805	C3	R307	A3	R521	C2	R824	C3		
C312	C4	C748	B3	CL112	＊C4	D400	A4	Q806	C4	R308	A3	R522	C2	R901	A1		
C313	C4	C749	A2	CL113	＊C4	D401	B2	Q901	A1	R309	A4	R523	C2	R902	A2		
C314	B2	C750	A2	CL114	＊C4	D402	B2			R310	A4	R524	C2	R903	A2		
C315	B2	C754	B2	CL115	＊C4	D500	C3	R1	C1	R311	A3	R525	C2	R904	A2		
C317	B2	C755	B2	CL116	＊C4	D501	C3	R3	C1	R312	A3	R526	C2	R905	A2		
C318	B2	C756	B2	CL117	＊C4	D502	D2	R4	C1	R313	A3	R529	D2	R906	A2		
C319	B3	C757	A1	CL118	＊C4	D503	D2	R5	C1	R314	A4	R533	B4	R907	A2		
C320	B3	C758	A2	CL119	＊C4	D506	C1	R6	D1	R315	A4	R534	B4	R908	A2		
C321	B3	C759	B1	CL120	＊C4	D507	D1	R7	D1	R316	A4	R535	B4	R909	B2		
C322	B3	C760	B2	CL201	＊B4	D508	D1	R8	D1	R317	A4	R536	D4	R910	B2		
C323	B3	C761	A2	CL202	＊B4	D701	C3	R10	D4	R318	D1	R537	D4	R911	B2		
C324	A4	C801	D3	CL203	＊B4	D702	C3	R11	D4	R323	A4	R540	D4	R912	B2		
C325	A3	C802	D3	CL204	＊B4	D801	D4	R12	D4	R324	A4	R541	B4	R913	B1		
C326	D1	C901	A2	CL205	＊B4	D802	D4	R13	D4	R325	A3	R542	B4	R914	B1		
C327	D1	C902	A2	CL206	＊B4	D803	D4	R14	D4	R326	A3	R543	B4	R915	B1		
C328	B4	C903	A2	CL207	＊B4	D804	D4	R16	D4	R327	A3	R544	C4	R916	B2		
C329	A2	C904	A1	CL208	＊B4	D805	D4	R17	D4	R328	B4	R545	C4	R917	A1		
C331	A4	C905	A2	CL209	＊B4	D806	D4	R18	D4	R329	B4	R546	D3	R918	B2		
C332	A4	C906	A2	CL210	＊B4	D807	D4	R19	D4	R330	A2	R547	D3	R919	A1		
C333	A3	C907	A2	CL211	＊B4	D808	D4	R20	D4	R331	C3	R548	D3	R921	A1		
C334	A4	C908	B1	CL212	＊B4	D809	D4	R21	D1	R332	C2	R549	D3	R922	A1		
C400	B4	C909	A1	CL213	＊B4	D810	D4	R27	C1	R333	B2	R550	D3	R923	B2		
C401	A4	C910	A2	CL214	＊B4	D811	D4	R28	C1	R337	B2	R551	D3				
C402	A4	C911	A1	CL218	＊B4	D812	D4	R29	C2	R339	B2	R552	D3	RB500	C3		
C403	A4	C912	A2	CL219	＊B4	D813	D4	R30	A1	R340	B2	R553	C2	RB501	D2		
C404	B4			CL220	＊C4	D814	D4	R31	A2	R341	B2	R555	C2	RB502	D3		
C405	A4	CL2	＊A4	CL221	＊C4	D815	D4	R32	B1	R342	B2	R556	C2	RB503	D3		
C406	A4	CL3	＊A4	CL222	＊C4	D816	D4	R33	B1	R343	B2	R557	D3	RB504	D3		
C407	B2	CL4	＊A4	CL223	＊C4	D901	A1	R34	B1	R344	B3	R558	C2	RB506	C2		
C408	B3	CL5	＊A4	CL224	＊C4			R35	B1	R345	B3	R559	C2	RB507	C2		
C409	B3	CL6	＊A4	CL225	＊C4	E1	B4	R36	B1	R346	B3	R700	A1	RB508	C2		
C410	B3	CL8	＊A4	CL233	＊C4	E2	B4	R37	C1	R347	B3	R701	A1	RB510	D4		
C411	B3	CL9	＊A4	CL236	＊C3	E3	B1	R38	B1	R348	C3	R702	A2	RB511	D3		
C412	B3	CL10	＊A4	CL238	＊C4			R39	C1	R349	C2	R703	A2	RB512	D3		
C413	B3	CL11	＊A4	CL243	＊C4	IC1	C1	R40	C1	R400	B4	R704	A1	RB513	C3		
C414	B3	CL12	＊A4	CL244	＊C4	IC2	C1	R41	C1	R401	B4	R705	A1	RB514	C3		
C415	B3	CL13	＊A4	CL246	＊C4	IC3	D4	R42	C1	R402	A4	R706	A1	RB515	D2		
C416	B3	CL14	＊A4	CL248	＊C4	IC5	B1	R43	C1	R403	A4	R707	A1	RB516	D2		
C417	B3	CL15	＊A4	CL250	＊C4	IC6	D1	R44	C1	R404	A4	R708	A1	RB801	C4		
C418	B3	CL16	＊A4	CL401	＊C1	IC200	B2	R45	C1	R405	A4	R709	B1	RB802	D4		
C419	B3	CL17	＊A4	CL402	＊C1	IC201	A3	R46	D1	R406	A4	R710	C3	RB803	D3		
C420	B3	CL18	＊B4	CL403	＊C1	IC204	A2	R47	D4	R407	A4	R711	C3	RB804	D4		
C421	B3	CL19	＊B4	CL405	＊C1	IC300	B3	R48	D4	R408	A4	R714	B1	RB805	D3		
C422	B3	CL20	＊B4	CL406	＊C1	IC301	A4	R49	C2	R409	C2	R715	B1	RB806	D4		
C423	B3	CL21	＊B4	CL407	＊C1	IC302	A3	R203	D4	R410	B4	R716	B1	RB808	D4		
C424	B3	CL22	＊D2	CL409	＊C1	IC303	D1	R204	D4	R411	B4	R740	A1	RB810	C3		
C425	B3	CL23	＊B4	CL410	＊C1	IC304	D1	R205	D4	R412	B4	R741	A1	RB811	C3		
C426	B4	CL24	＊B4	CL411	＊C1	IC305	A4	R206	D4	R413	B4	R742	A1				
C427	A4	CL25	＊B4	CL412	＊C1	IC306	B4	R207	D4	R414	B4	R743	A1	S500	D2		
C428	B2	CL26	＊B4	CL413	＊C1	IC307	A2	R208	D4	R415	A4	R744	A1				
C429	B4	CL29	＊B4	CL415	＊C1	IC309	A4	R209	D4	R416	A4	R745	A2	TP1	C1		
C500	D2	CL31	＊B4	CL416	＊C1	IC400	B3	R210	D4	R417	A4	R746	A2	TP2	D2		
C501	D2	CL32	＊B4	CL417	＊C1	IC401	B4	R211	D4	R418	C3	R747	A2	TP3	D2		
C502	D2	CL33	＊B4	CL418	＊C1	IC402	A4	R219	B2	R419	B2	R748	A2	TP300	A3		
C503	D2	CL35	＊B4	CL503	＊D1	IC403	B2	R220	B2	R420	B3	R749	A2	TP301	A3		

SV-213
SUFFIX: -12

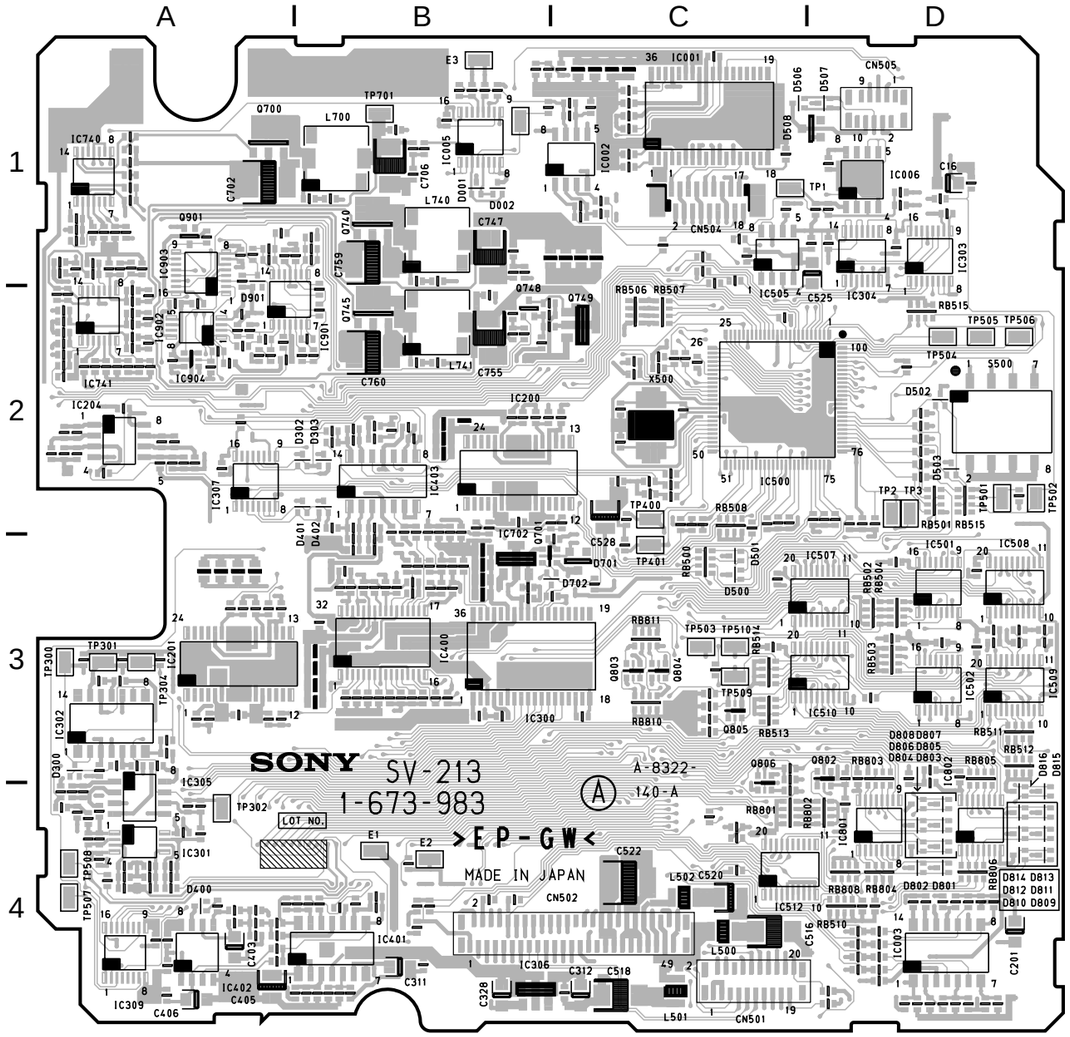

SV-213 -A SIDE-
SUFFIX: -12

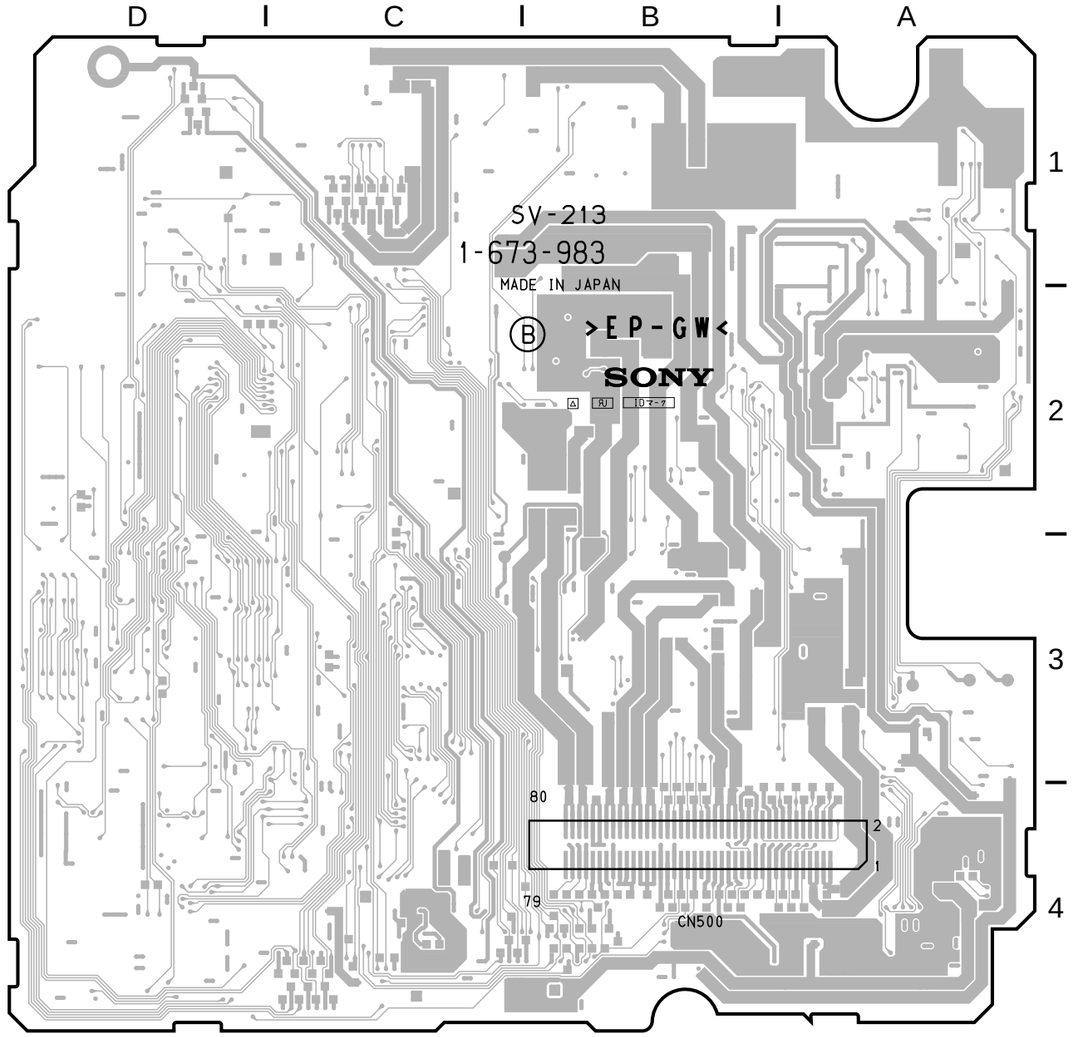

SV-213 -B SIDE-
SUFFIX: -12

5-25 (b)

SV-213(1-673-983-11)

C1	C1	C504	D2	CL36	✻B4	CL504	✻D1	IC500	C2	R222	C2	R421	B3	R750	A2	TP302	A4
C2	A1	C505	D2	CL37	✻B4	CL505	✻D1	IC501	D3	R223	C2	R422	B2	R751	A2	TP304	A3
C3	A1	C506	D2	CL38	✻B4	CL506	✻D1	IC502	D3	R225	A2	R423	B3	R752	A1	TP400	C2
C4	A2	C507	D2	CL40	✻B4	CL507	✻D1	IC505	C1	R226	A2	R424	B3	R753	A1	TP401	C3
C5	C1	C508	D2	CL41	✻B4	CL508	✻D1	IC507	D3	R227	A2	R425	B3	R754	B1	TP501	D2
C6	B1	C509	D2	CL42	✻B4	CL1001	✻D1	IC508	D3	R228	A2	R426	C2	R759	B1	TP502	D2
C7	C1	C510	D2	CL43	✻B4	CL1002	✻D3	IC509	D3	R229	B2	R427	B3	R760	B1	TP503	C3
C8	C1	C512	D2	CL44	✻B4	CL1003	✻D3	IC510	D3	R230	B2	R428	B3	R761	B1	TP504	D2
C9	C1	C516	C4	CL45	✻B4	CL1300	✻A3	IC512	C4	R231	B2	R429	B2	R762	A2	TP505	D2
C10	C1	C517	C3	CL46	✻B4	CL1301	✻A3	IC702	B3	R232	B2	R430	B2	R763	A2	TP506	D2
C11	C1	C518	C4	CL47	✻B4	CL1302	✻A3	IC740	A1	R233	B2	R431	B3	R764	A2	TP507	A4
C13	D1	C520	C4	CL48	✻B4	CL1304	✻A3	IC741	A2	R234	B2	R432	B3	R765	A2	TP508	A4
C16	D1	C522	C4	CL49	✻B4	CL1400	✻C2	IC801	D4	R235	B2	R433	B3	R766	A2	TP509	C3
C17	D4	C524	D1	CL50	✻B4	CL1401	✻C3	IC802	D4	R236	B2	R434	B3	R767	A2	TP510	C3
C18	B1	C525	D1	CL51	✻B4	CL1502	✻D2	IC901	A2	R238	A3	R436	B3	R768	A2	TP701	B1
C200	D4	C526	C1	CL52	✻B4	CL1503	✻C4	IC902	A2	R239	A3	R437	B3	R769	A1	TP704	B1
C201	D4	C527	C2	CL56	✻B4	CL1504	✻D2	IC903	A1	R241	A3	R438	B3	R770	A1		
C202	D4	C528	C2	CL57	✻B4	CL1505	✻D2	IC904	A2	R242	A3	R439	B3	R771	B2	X500	C2
C203	C2	C529	C2	CL60	✻B4	CL1506	✻C2			R244	A2	R440	B3	R772	B2		
C204	B2	C530	C2	CL64	✻B4	CL1507	✻A4	L500	C4	R245	A2	R441	B3	R773	B2	✻: B SIDE	
C205	A2	C531	C2	CL65	✻B4	CL1508	✻A4	L501	C4	R246	A2	R442	B1	R774	B2		
C206	A2	C533	D3	CL67	✻B4	CL1509	✻C3	L502	C4	R247	A2	R443	C1	R775	B2		
C207	A3	C534	D3	CL68	✻B4	CL1510	✻C3	L700	B1	R248	A3	R444	C1	R776	B2		
C208	A2	C535	C3	CL69	✻B4	CL1901	✻C1	L740	B1	R249	A3	R445	C1	R777	B2		
C209	A2	C537	C4	CL71	✻B4	CL1902	✻D4	L741	B2	R250	A3	R501	C1	R778	B2		
C210	D1	C538	D3	CL72	✻B4	CL1903	✻D4			R251	A3	R502	C2	R801	D4		
C211	A2	C539	D3	CL73	✻B4			LND1	D1	R252	A3	R503	C2	R802	C4		
C212	A3	C700	A2	CL74	✻B4	CN500	✻B4			R253	A3	R504	D2	R805	D4		
C300	A4	C701	A1	CL75	✻B4	CN501	C4	Q700	A1	R254	A3	R505	C2	R806	D3		
C301	A4	C702	A1	CL77	✻B4	CN502	C4	Q701	B3	R255	A3	R513	C1	R810	D3		
C302	A4	C705	B1	CL80	✻B4	CN504	C1	Q740	B1	R300	A4	R514	C2	R811	C3		
C303	A4	C706	B1	CL104	✻C4	CN505	D1	Q745	B2	R301	A4	R515	C1	R812	C3		
C304	A4	C707	B1	CL105	✻C4			Q748	B2	R302	A4	R516	C1	R813	D3		
C305	A4	C740	A1	CL107	✻C4	D1	B1	Q749	C2	R303	A4	R517	C4	R814	D4		
C306	A4	C741	A2	CL108	✻C4	D2	B1	Q802	D3	R304	A4	R518	C3	R818	C3		
C309	A4	C742	A2	CL109	✻C4	D300	A3	Q803	C3	R305	A4	R519	C1	R820	C3		
C310	B4	C746	B1	CL110	✻C4	D302	B2	Q804	C3	R306	A3	R520	C1	R822	C3		
C311	B4	C747	B1	CL111	✻C4	D303	B2	Q805	C3	R307	A3	R521	C2	R824	C3		
C312	C4	C748	B3	CL112	✻C4	D400	A4	Q806	C4	R308	A3	R522	C2	R901	A1		
C313	C4	C749	A2	CL113	✻C4	D401	B2	Q901	A1	R309	A4	R523	C2	R902	A2		
C314	B2	C750	A2	CL114	✻C4	D402	B2			R310	A4	R524	C2	R903	A2		
C315	B2	C754	B2	CL115	✻C4	D500	C3	R1	C1	R311	A3	R525	C2	R904	A2		
C317	B2	C755	B2	CL116	✻C4	D501	C3	R3	C1	R312	A3	R526	C2	R905	A2		
C318	B2	C756	B2	CL117	✻C4	D502	D2	R4	C1	R313	A3	R529	D2	R906	A2		
C319	B3	C757	A1	CL118	✻C4	D503	D2	R5	C1	R314	A4	R533	B4	R907	A2		
C320	B3	C758	A2	CL119	✻C4	D506	C1	R6	D1	R315	A4	R534	B4	R908	A2		
C321	B3	C759	B1	CL120	✻C4	D507	D1	R7	D1	R316	A4	R535	B4	R909	B2		
C322	B3	C760	B2	CL201	✻B4	D508	D1	R8	D1	R317	A4	R536	D4	R910	B2		
C323	B3	C761	A2	CL202	✻B4	D701	C3	R10	D4	R318	D1	R537	D4	R911	B2		
C324	A4	C801	D3	CL203	✻B4	D702	C3	R11	D4	R323	A4	R540	D4	R912	B2		
C325	A3	C802	D3	CL204	✻B4	D801	D4	R12	D4	R324	A4	R541	B4	R913	B1		
C326	D1	C901	A2	CL205	✻B4	D802	D4	R13	D4	R325	A3	R542	B4	R914	B1		
C327	D1	C902	A2	CL206	✻B4	D803	D4	R14	D4	R326	A3	R543	B4	R915	B1		
C328	B4	C903	A2	CL207	✻B4	D804	D4	R16	D4	R327	A3	R544	C4	R916	B2		
C329	A2	C904	A1	CL208	✻B4	D805	D4	R17	D4	R328	B4	R545	C4	R917	A1		
C331	A4	C905	A2	CL209	✻B4	D806	D4	R18	D4	R329	B4	R546	D3	R918	B2		
C332	A4	C906	A2	CL210	✻B4	D807	D4	R19	D4	R330	A2	R547	D3	R919	A1		
C333	A3	C907	A2	CL211	✻B4	D808	D4	R20	D4	R331	C3	R548	D3	R921	A1		
C334	A4	C908	B1	CL212	✻B4	D809	D4	R21	D1	R332	C2	R549	D3	R922	A1		
C400	B4	C909	A1	CL213	✻B4	D810	D4	R27	C1	R333	B2	R550	D3	R923	B2		
C401	A4	C910	A2	CL214	✻B4	D811	D4	R28	C1	R337	B2	R551	D3				
C402	A4	C911	A1	CL218	✻B4	D812	D4	R29	C2	R339	B2	R552	D3	RB500	C3		
C403	A4	C912	A2	CL219	✻B4	D813	D4	R30	A1	R340	B2	R553	C2	RB501	D2		
C404	B4			CL220	✻C4	D814	D4	R31	A2	R341	B2	R555	C2	RB502	D3		
C405	A4	CL2	✻A4	CL221	✻C4	D815	D4	R32	B1	R342	B2	R556	C2	RB503	D3		
C406	A4	CL3	✻A4	CL222	✻C4	D816	D4	R33	B1	R343	B2	R557	D3	RB504	D3		
C407	B2	CL4	✻A4	CL223	✻C4	D901	A1	R34	B1	R344	B3	R558	C2	RB506	C2		
C408	B3	CL5	✻A4	CL224	✻C4			R35	B1	R345	B3	R559	C2	RB507	C2		
C409	B3	CL6	✻A4	CL225	✻C4	E1	B4	R36	B1	R346	B3	R700	A1	RB508	C2		
C410	B3	CL8	✻A4	CL233	✻C4	E2	B4	R37	C1	R347	B3	R701	A1	RB510	D4		
C411	B3	CL9	✻A4	CL236	✻C3	E3	B1	R38	B1	R348	C3	R702	A2	RB511	D3		
C412	B3	CL10	✻A4	CL238	✻C4			R39	C1	R349	C2	R703	A2	RB512	D3		
C413	B3	CL11	✻A4	CL243	✻C4	IC1	C1	R40	C1	R400	B4	R704	A1	RB513	C3		
C414	B3	CL12	✻A4	CL244	✻C4	IC2	C1	R41	C1	R401	B4	R705	A1	RB514	C3		
C415	B3	CL13	✻A4	CL246	✻C4	IC3	D4	R42	C1	R402	A4	R706	A1	RB515	D2		
C416	B3	CL14	✻A4	CL248	✻C4	IC5	B1	R43	C1	R403	A4	R707	A1	RB516	D2		
C417	B3	CL15	✻A4	CL250	✻C4	IC6	D1	R44	C1	R404	A4	R708	A1	RB801	C4		
C418	B3	CL16	✻A4	CL401	✻C1	IC200	B2	R45	C1	R405	A4	R709	B1	RB802	D4		
C419	B3	CL17	✻A4	CL402	✻C1	IC201	A3	R46	D1	R406	A4	R710	C3	RB803	D3		
C420	B3	CL18	✻B4	CL403	✻C1	IC204	A2	R47	D4	R407	A4	R711	C3	RB804	D4		
C421	B3	CL19	✻B4	CL405	✻C1	IC300	B3	R48	D4	R408	A4	R714	B1	RB805	D3		
C422	B3	CL20	✻B4	CL406	✻C1	IC301	A4	R49	C2	R409	C2	R715	B1	RB806	D4		
C423	B3	CL21	✻B4	CL407	✻C1	IC302	A3	R203	D4	R410	B4	R716	B1	RB808	D4		
C424	B3	CL22	✻D2	CL409	✻C1	IC303	D1	R204	D4	R411	B4	R740	A1	RB810	C3		
C425	B3	CL23	✻B4	CL410	✻C1	IC304	D1	R205	D4	R412	B4	R741	A1	RB811	C3		
C426	B4	CL24	✻B4	CL411	✻C1	IC305	A4	R206	D4	R413	B4	R742	A1				
C427	A4	CL25	✻B4	CL412	✻C1	IC306	B4	R207	D4	R414	B4	R743	A1	S500	D2		
C428	B2	CL26	✻B4	CL413	✻C1	IC307	A2	R208	D4	R415	A4	R744	A1				
C429	B4	CL29	✻B4	CL415	✻C1	IC309	A4	R209	D4	R416	A4	R745	A2	TP1	C1		
C500	D2	CL31	✻B4	CL416	✻C1	IC400	B3	R210	D4	R417	A4	R746	A2	TP2	D2		
C501	D2	CL32	✻B4	CL417	✻C1	IC401	B4	R211	D4	R418	C3	R747	A2	TP3	D2		
C502	D2	CL33	✻B4	CL418	✻C1	IC402	A4	R219	B2	R419	B2	R748	A2	TP300	A3		
C503	D2	CL35	✻B4	CL503	✻D1	IC403	B2	R220	B2	R420	B3	R749	A2	TP301	A3		

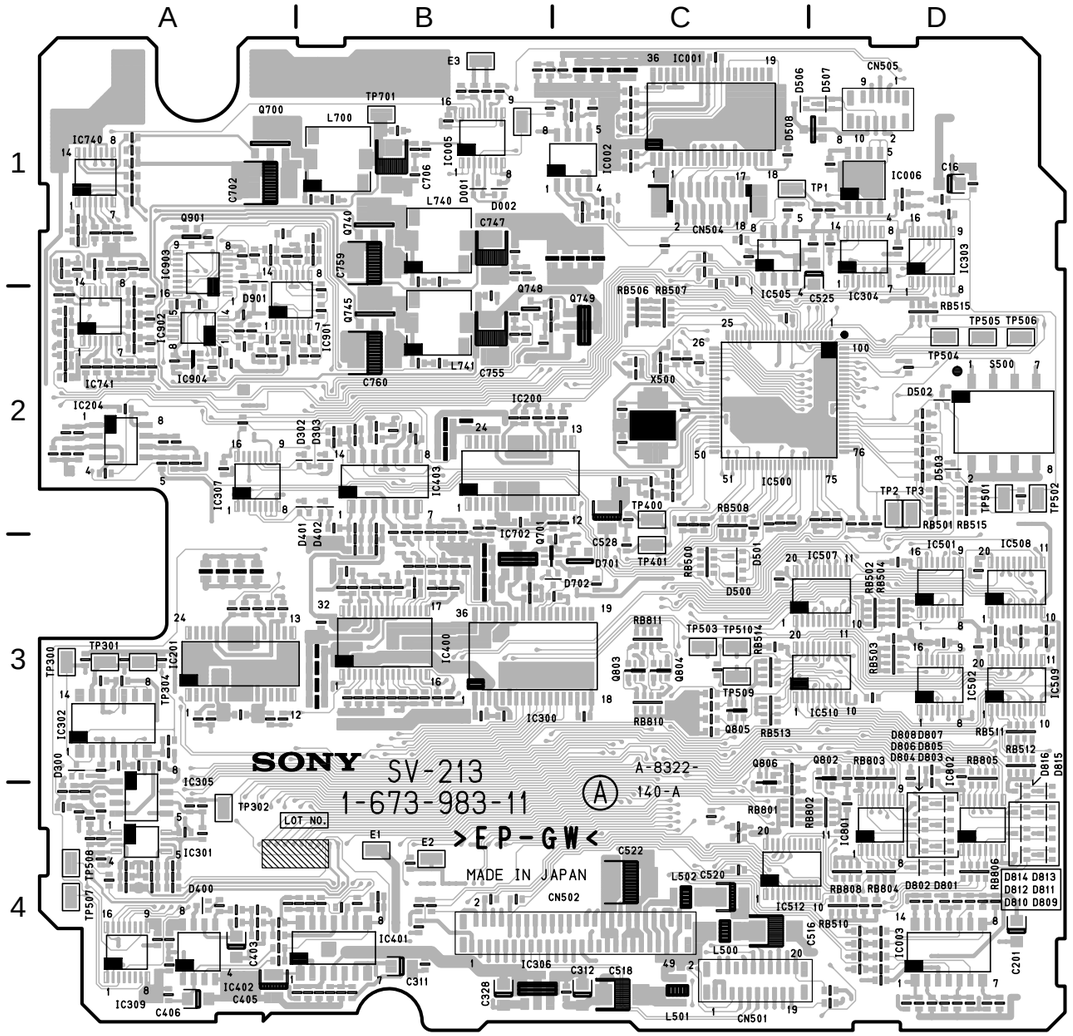

SV-213 **-A SIDE-**
SUFFIX: -11

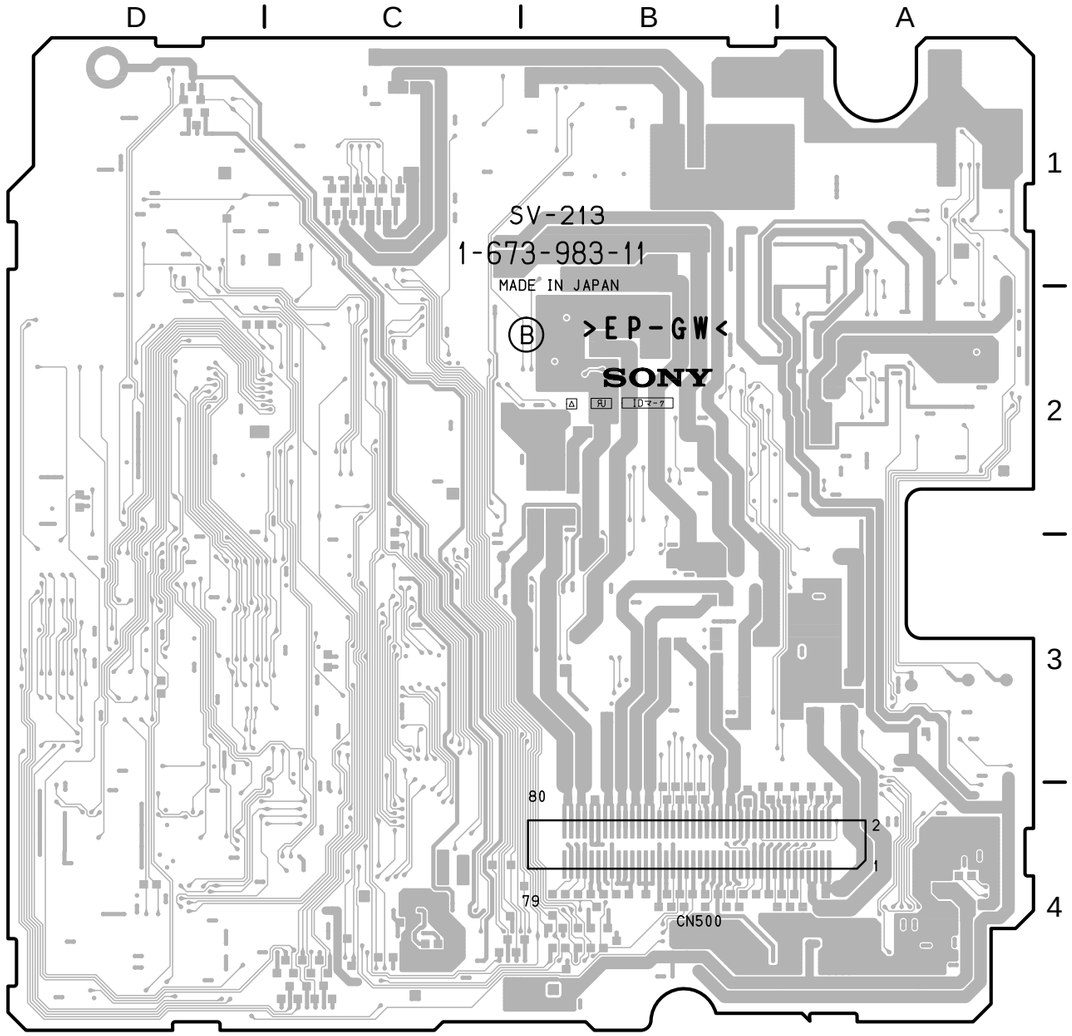

SV-213 **-B SIDE-**
SUFFIX: -11

SW-18, SW-19, SW-929, VE-44

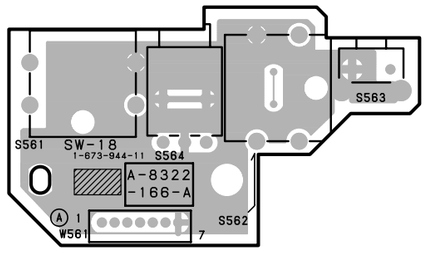

SW-18 -A SIDE-
SUFFIX: -11

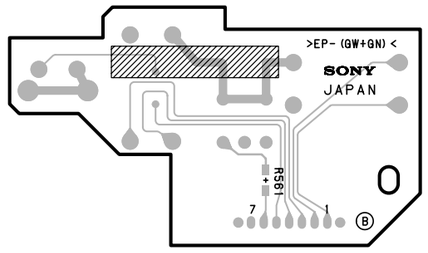

SW-18 -B SIDE-
SUFFIX: -11

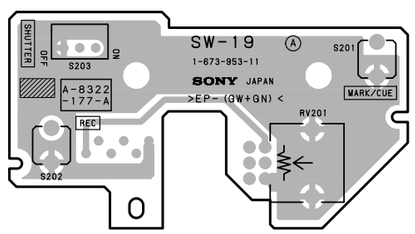

SW-19 -A SIDE-
SUFFIX: -11

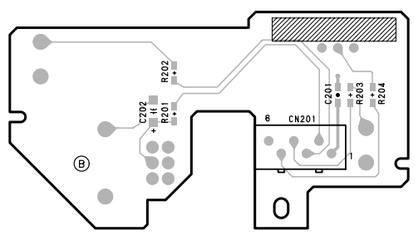

SW-19 -B SIDE-
SUFFIX: -11

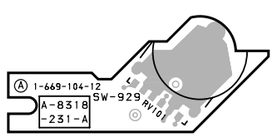

SW-929 -A SIDE-
SUFFIX: -12

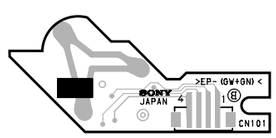

SW-929 -B SIDE-
SUFFIX: -12

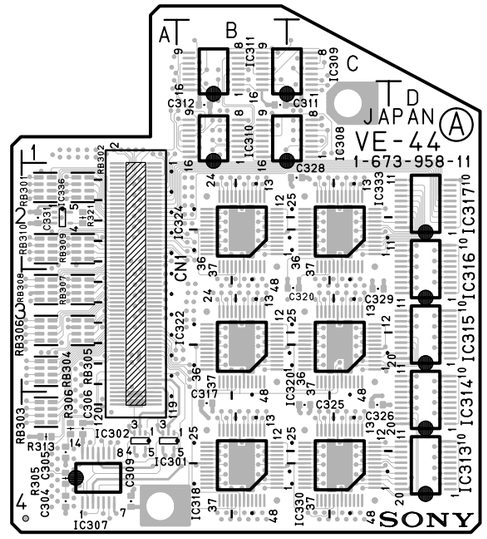

VE-44 -A SIDE-
SUFFIX: -11

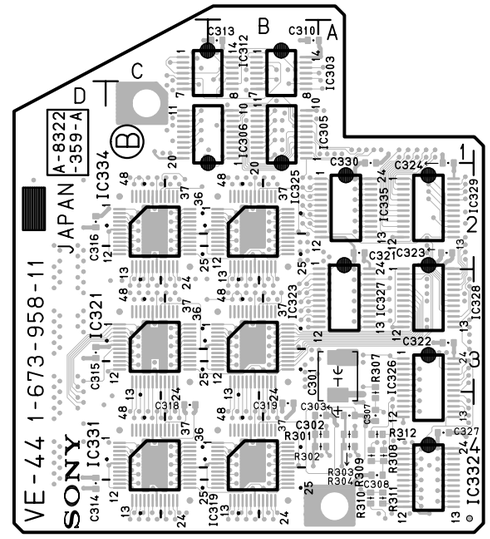

VE-44 -B SIDE-
SUFFIX: -11

VE-44(1-673-958-11)

C301	＊A3	C322	＊A3	IC310	B1	IC331	＊C4	RB301	A2
C302	＊A4	C323	＊A2	IC311	B1	IC332	＊A4	RB302	A2
C303	＊A4	C324	＊A1	IC312	＊C1	IC333	C2	RB303	A4
C304	A4	C325	C4	IC313	D4	IC334	＊C2	RB304	A3
C305	A4	C326	C4	IC314	D4	IC335	＊A2	RB305	A3
C306	A4	C327	＊A4	IC315	D3	IC336	A2	RB306	A3
C307	＊A4	C328	C2	IC316	D3			RB307	A3
C308	＊A4	C329	C3	IC317	D2	R301	＊A4	RB308	A3
C309	A4	C330	＊A1	IC318	B4	R302	＊A4	RB309	A2
C310	＊B1	C331	A2	IC319	＊B4	R303	＊A4	RB310	A2
C311	B1			IC320	C3	R304	＊A4		
C312	B1	CN1	A3	IC321	＊C3	R305	A4	＊: B SIDE	
C313	＊B1			IC322	B3	R306	A4		
C314	＊D4	IC301	A4	IC323	＊B3	R307	＊A4		
C315	＊D3	IC302	A4	IC324	B2	R308	＊A4		
C316	＊D2	IC303	＊B1	IC325	＊B2	R309	＊A4		
C317	B4	IC305	＊B1	IC326	＊A3	R310	＊A4		
C318	＊C4	IC306	＊B1	IC327	＊A2	R311	＊A4		
C319	＊B4	IC307	A4	IC328	＊A2	R312	＊A4		
C320	C3	IC308	C1	IC329	＊A2	R313	A4		
C321	＊A2	IC309	C1	IC330	C4	R321	A2		

5-26

TG-204 (1-673-959-12)

C1	C3	C102	B2	IC16	＊B1
C2	C3	C103	B2	IC17	B2
C3	A1	C104	A3	IC18	＊B3
C4	A1	C105	A1	IC19	＊B3
C5	A1	C106	＊B2	IC21	B2
C6	B1	C110	＊B1	IC22	C2
C7	B1	C111	＊B1	IC23	B2
C9	＊C2	C112	＊B2	IC30	B2
C10	C2	C113	＊C2	IC31	B2
C11	＊C1	C801	B2	IC32	B2
C12	＊C2	C802	＊B2	IC33	B2
C13	C2	C812	A1	IC34	B3
C14	B1	C813	A1	IC35	B2
C15	＊C1	C814	A2	IC36	A1
C16	＊A1	C815	＊B2	IC37	A1
C17	C2	C816	＊A2	IC38	A1
C18	C1	C817	＊A2	IC39	＊B2
C20	＊C2	C818	＊B2	IC40	＊B2
C21	C2	C819	＊B2	IC801	B2
C22	C2	C820	B2	IC807	A1
C23	＊C2	C821	＊B2	IC808	A2
C24	＊B3	C822	B2	IC809	＊A2
C25	＊B3	C823	＊B2	IC811	＊A2
C26	＊C1	C824	＊B2	IC812	B2
C27	＊B1	C825	＊B2	IC813	B2
C29	C1	C826	A2	IC814	A1
C30	C1	C827	A2		
C31	C1	C828	A1	L1	C3
C32	＊C2	C829	A2	L2	A1
C33	C2			L3	A1
C34	＊C2	CN2	B3	L4	C2
C35	C1	CN3	A3	L5	C2
C36	C1	CN4	C2	L6	＊B1
C37	＊C1	CN5	C3	L7	B1
C38	＊C1	CN6	C1	L8	C3
C39	＊C2	CN7	C1	L9	B1
C40	＊B2	CN8	A1	L10	＊C3
C41	C1	CN11	＊C1	L11	B3
C42	＊A3	CN12	＊A1	L12	B3
C43	＊B2			L801	A3
C44	＊B2	CNI801	＊A2	L806	A2
C45	＊B2				
C46	＊B2	CP1	C3	Q1	＊C1
C47	＊B3			Q2	＊C2
C48	B2	D1	＊C2	Q3	＊C2
C49	B2	D2	C2	Q4	＊C1
C50	B1	D5	B1	Q5	＊C1
C51	B1	D6	B1	Q6	＊C2
C52	B3	D7	B1	Q7	＊C2
C54	＊B3	D8	A3	Q8	＊C2
C55	＊C3	D9	＊B1	Q9	＊C3
C56	＊C3	D10	＊B1	Q10	＊C3
C57	B1	D11	＊B1	Q11	＊C3
C58	B1	D12	＊A1	Q12	＊C3
C59	＊B1	D13	＊B2	Q13	A3
C60	B1	D801	＊B2	Q801	＊B2
C61	＊B1				
C62	A3	E1	＊A1	R1	＊C3
C63	＊A3			R2	C3
C64	A3	FB1	C2	R3	＊C3
C65	＊A3	FB2	C2	R4	C3
C66	＊B3	FB4	＊A1	R5	A1
C67	＊B1	FB5	＊C1	R6	＊A1
C68	A1	FB6	C2	R7	＊A1
C70	C1	FB7	＊C2	R8	＊C3
C71	＊C1	FB8	B3	R9	＊C3
C72	＊C2	FB9	＊C3	R10	B1
C73	＊C2	FB10	B2	R11	B1
C74	＊C2	FB11	＊B2	R12	＊A1
C76	＊B3	FB12	B2	R13	＊A1
C77	＊B3	FB13	B2	R14	＊A1
C78	C3	FB14	B2	R15	B1
C79	＊B3	FB15	＊B1	R16	B1
C80	C2	FB16	＊B1	R17	B1
C81	C1	FB17	＊B1	R19	＊C1
C82	＊C2	FB18	B3	R20	＊C1
C83	＊C1	FB801	A3	R21	C1
C84	B3			R22	C1
C85	B3	IC1	C3	R23	C1
C86	＊C2	IC2	A1	R24	C1
C87	＊A3	IC3	＊A1	R25	C2
C88	C3	IC4	＊B1	R26	C2
C89	＊C3	IC5	C1	R27	C2
C90	＊B2	IC6	C2	R28	＊C2
C91	B2	IC7	＊B2	R29	C2
C92	＊A2	IC8	＊B2	R30	＊C1
C93	B3	IC9	B2	R31	＊C1
C96	＊B2	IC10	B2	R32	C1
C97	B2	IC11	B2	R33	C1
C98	＊B2	IC12	B1	R34	C1
C99	B2	IC13	B1	R35	C1
C100	B2	IC14	＊A3	R36	＊C2
C101	B2	IC15	＊B3	R37	＊C2

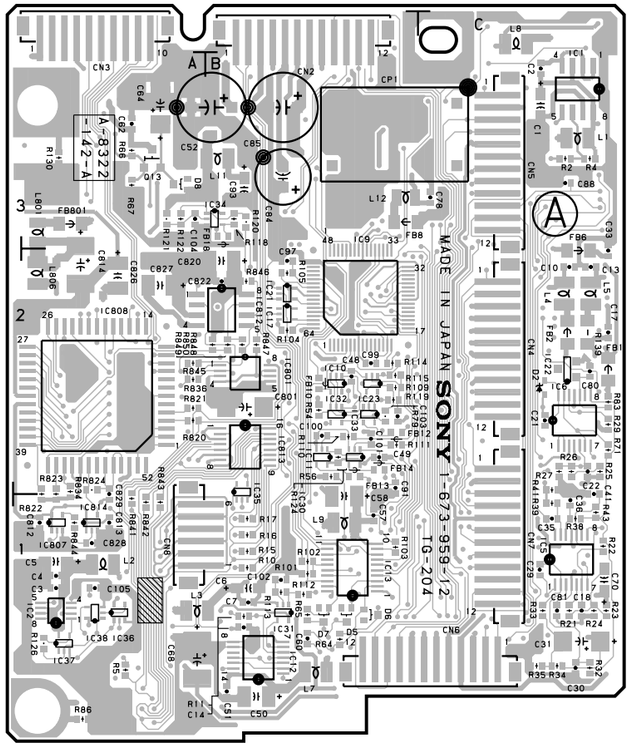

TG-204 **-A SIDE-**
SUFFIX: -12

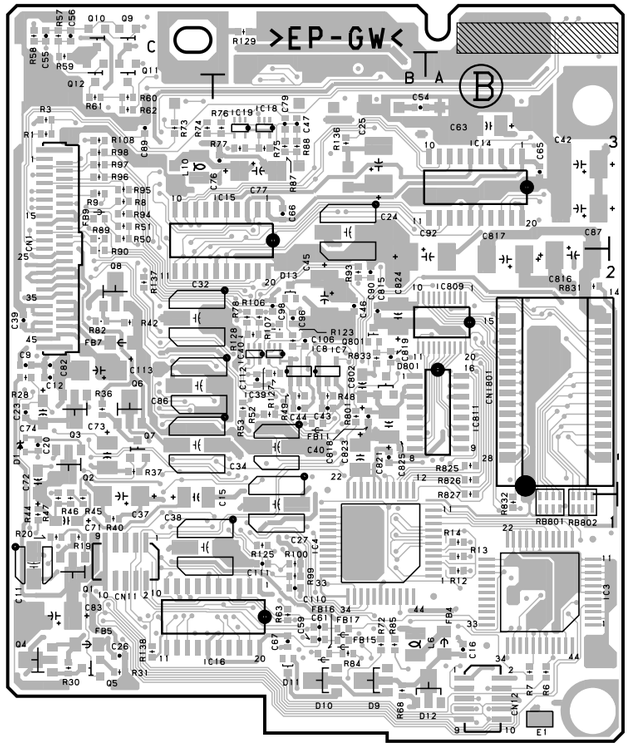

TG-204 **-B SIDE-**
SUFFIX: -12

R38	C1	R824	A2		
R39	C1	R825	＊A2		
R40	＊C1	R826	＊A2		
R41	C2	R827	＊A2		
R42	＊C2	R831	＊A2		
R43	C1	R832	＊A1		
R44	＊C1	R833	＊B2		
R45	＊C1	R834	A2		
R46	＊C1	R836	A2		
R47	＊C1	R841	A1		
R48	＊B2	R842	A1		
R49	＊B2	R843	A1		
R50	＊C3	R844	A1		
R51	＊C3	R845	A2		
R52	＊B2	R846	B2		
R53	＊B2	R847	B2		
R54	B2	R848	B2		
R56	B2	R849	B2		
R57	＊C3	R850	B2		
R58	＊C3				
R59	＊C3	RB801	＊A1		
R60	＊C3	RB802	＊A1		
R61	＊C3				
R62	＊C3	＊:B SIDE			
R63	＊B1				
R64	B1				
R65	B1				
R66	A3				
R67	A3				
R68	＊B1				
R71	C2				
R72	＊B1				
R73	＊C3				
R74	＊C3				
R75	＊B3				
R76	＊B3				
R77	＊B3				
R78	＊B2				
R79	B2				
R82	＊C2				
R83	C2				
R84	＊B1				
R85	＊B1				
R86	A1				
R87	＊B3				
R88	＊B3				
R89	＊C3				
R90	＊C2				
R93	＊B2				
R94	＊C3				
R95	＊C3				
R96	＊C3				
R97	＊C3				
R98	＊C3				
R99	＊B1				
R100	＊B1				
R101	B1				
R102	B1				
R103	B1				
R104	B2				
R105	B2				
R106	＊B2				
R107	＊B2				
R108	＊C3				
R109	B2				
R110	B2				
R111	B2				
R112	B1				
R113	B2				
R114	B2				
R115	B2				
R118	B3				
R119	B2				
R120	B3				
R121	A3				
R122	A3				
R123	＊B2				
R124	B2				
R125	＊B1				
R126	A1				
R127	＊B2				
R128	＊B2				
R129	＊B3				
R130	A3				
R136	＊B3				
R137	＊C2				
R138	＊C1				
R139	C2				
R801	＊B2				
R820	A2				
R821	A2				
R822	A2				
R823	A2				

TG-204(1-673-959-11)

C1	C3	C101	B2	Q1	＊C1
C2	C3	C102	B1	Q2	＊C2
C3	A1	C103	B2	Q3	＊C2
C4	A1	C104	A3	Q4	＊C1
C5	A1	C105	A1	Q5	＊C1
C6	B1	C106	＊B2	Q6	＊C2
C7	B1	C110	＊B1	Q7	＊C2
C9	＊C2	C111	＊B1	Q8	＊C2
C10	C2	C112	＊B2	Q9	＊C3
C11	＊C1			Q10	＊C3
C12	＊C2	CN1	＊C2	Q11	＊C3
C13	C2	CN2	B3	Q12	＊C3
C14	B1	CN3	A3	Q13	A3
C15	＊C1	CN4	C2		
C16	＊A1	CN5	C3	R1	＊C3
C17	C2	CN6	C1	R2	C3
C18	C1	CN7	C1	R3	＊C3
C19	＊C1	CN8	A1	R4	C3
C20	＊C2	CN10	B3	R5	A1
C21	＊C2	CN11	＊C1	R6	＊A1
C22	C2	CN12	＊A1	R7	＊A1
C23	＊C2			R8	＊C3
C24	＊B3	CP1	C3	R9	＊C3
C25	＊B3			R10	B1
C26	＊C1	D1	＊C2	R11	B1
C27	＊B1	D2	＊C2	R12	＊A1
C29	C1	D5	B1	R13	＊A1
C30	C1	D6	B1	R14	＊A1
C31	C1	D7	B1	R15	B1
C32	＊C2	D8	A3	R16	B1
C33	C2	D9	＊B1	R17	B1
C34	＊C2	D10	＊B1	R19	＊C1
C35	C1	D11	＊B1	R20	＊C1
C36	C1	D12	＊A1	R21	C1
C37	＊C2	D13	＊B2	R22	C1
C38	＊C1			R23	C1
C39	＊C2	E1	＊A1	R24	C1
C40	＊B2			R25	C2
C41	C1	FB1	C2	R26	C2
C42	＊A3	FB2	C2	R27	C2
C43	＊B2	FB3	C2	R28	＊C2
C44	＊B2	FB4	＊A1	R29	C2
C45	＊B2	FB5	＊C1	R30	＊C1
C46	＊B2	FB6	C2	R31	＊C1
C47	＊B3	FB7	＊C2	R32	C1
C48	B2	FB8	B3	R33	C1
C49	B2			R34	C1
C50	B1	IC1	C3	R35	C1
C51	B1	IC2	A1	R36	＊C2
C52	B3	IC3	＊A1	R37	＊C2
C54	＊B3	IC4	＊B1	R38	C1
C55	＊C3	IC5	C1	R39	C1
C56	＊C3	IC6	C2	R40	C2
C57	B1	IC7	＊B2	R41	C2
C58	B1	IC8	＊B2	R42	＊C2
C59	＊B1	IC9	B2	R43	C1
C60	B1	IC10	B2	R44	＊C1
C61	＊B1	IC11	B2	R45	＊C1
C62	A3	IC12	B1	R46	＊C1
C63	＊A3	IC13	B1	R47	＊C1
C64	A3	IC14	＊A3	R48	＊B2
C65	＊A3	IC15	＊B3	R49	＊B2
C66	＊B3	IC16	＊B1	R50	＊C3
C67	＊B1	IC17	B2	R51	＊C3
C68	A1	IC18	＊B3	R52	＊B2
C70	C1	IC19	＊B3	R53	＊B2
C71	＊C1	IC21	B2	R54	B2
C72	＊C2	IC22	C2	R55	B2
C73	＊C2	IC23	B2	R56	B2
C74	＊C2	IC30	B2	R57	＊C3
C76	＊B3	IC31	B1	R58	＊C3
C77	＊B3	IC32	B2	R59	＊C3
C78	C3	IC33	B2	R60	＊C3
C79	＊B3	IC34	B3	R61	＊C3
C80	C2	IC35	B2	R62	＊C3
C81	C1	IC36	A1	R63	＊B1
C82	＊C2	IC37	A1	R64	B1
C83	＊C1	IC38	A1	R65	B1
C84	B3	IC39	＊B2	R66	A3
C85	B3	IC40	＊B2	R67	A3
C86	＊C2			R68	＊B1
C87	＊A3	L1	C3	R71	C2
C88	C3	L2	A1	R72	＊B1
C89	＊C3	L3	A1	R73	＊C3
C90	＊B2	L4	C2	R74	＊C3
C91	B2	L5	C2	R75	＊B3
C92	＊A2	L6	＊B1	R76	＊B3
C93	B3	L7	B1	R77	＊B3
C96	＊B2	L8	C3	R78	＊B2
C97	B2	L9	B1	R79	B2
C98	＊B2	L10	＊C3	R80	B2
C99	B2	L11	B3	R81	B2
C100	B2	L12	B3	R82	＊C2

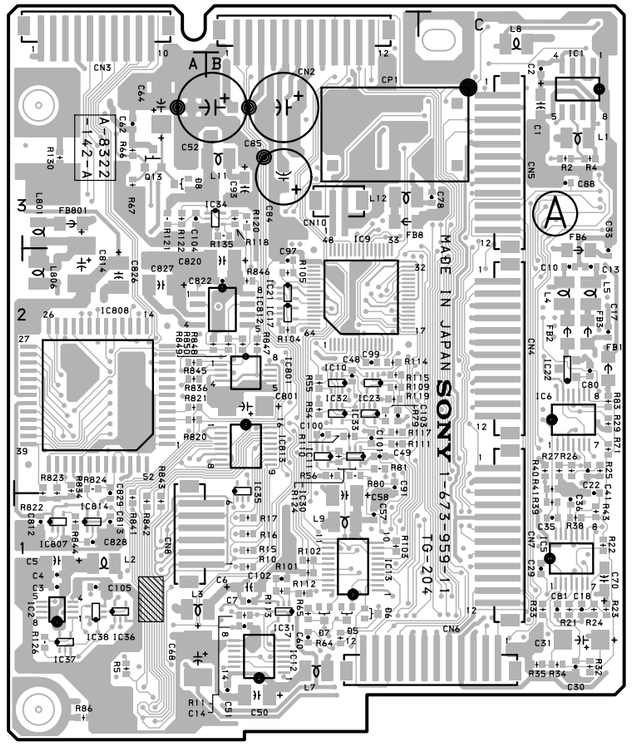

TG-204 **-A SIDE-**
SUFFIX: -11

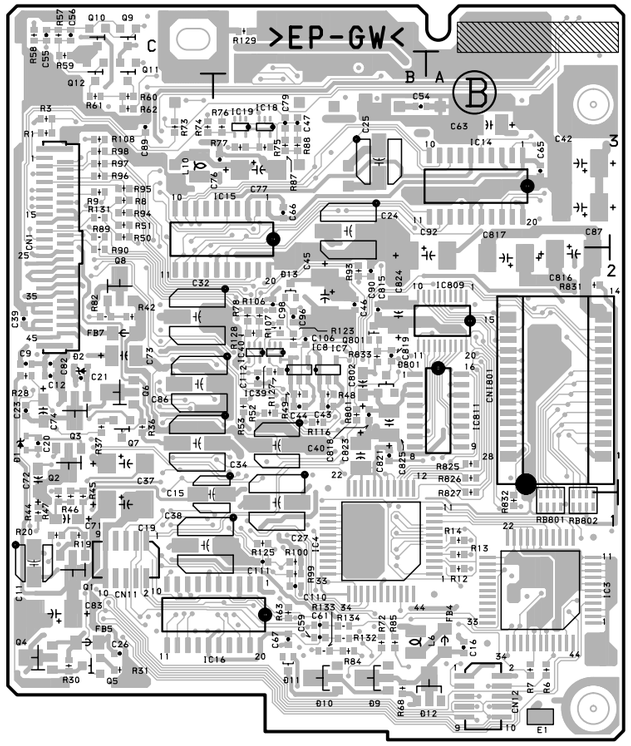

TG-204 **-B SIDE-**
SUFFIX: -11

R83	C2
R84	＊B1
R85	＊B1
R86	A1
R87	＊B3
R88	＊B3
R89	＊C3
R90	＊C2
R93	＊B2
R94	＊C3
R95	＊C3
R96	＊C3
R97	＊C3
R98	＊C3
R99	＊B1
R100	＊B1
R101	B1
R102	B1
R103	B1
R104	B2
R105	B2
R106	＊B2
R107	＊B2
R108	＊C3
R109	B2
R110	B2
R111	B2
R112	B1
R113	B1
R114	B2
R115	B2
R116	＊B2
R117	B2
R118	B3
R119	B2
R120	B3
R121	A3
R122	A3
R123	＊B2
R124	B2
R125	＊B1
R126	A1
R127	＊B2
R128	＊B2
R129	＊B3
R130	A3
R131	＊C3
R132	＊B1
R133	＊B1
R134	＊B1
R135	B3

＊: B SIDE

VA-190(1-673-963-11)

C1	D5	C166	＊C2	C318	A2	IC205	B3	Q322	A2	R121	C2	R229	＊B3	R336	＊A3	R904	A3		
C2	D5	C168	C4	C319	＊A2	IC206	＊B5	Q323	B3	R122	＊C3	R230	＊B3	R337	＊A3	R907	＊A4		
C3	D5	C169	C4	C320	＊A3	IC207	B5	Q324	A4	R123	＊C2	R231	＊B3	R338	＊A3				
C4	＊D2	C170	＊C3	C321	A3	IC301	A2			R125	＊C2	R232	＊B3	R339	A3	RB1	＊D3		
C5	D3	C171	＊C4	C322	A3	IC302	A3	R2	＊D2	R126	＊C2	R233	B3	R340	＊A3	RB2	＊D3		
C6	＊D4	C172	＊C3	C323	A3	IC303	A3	R3	＊D2	R127	＊C3	R234	＊B3	R341	＊A3				
C7	D2	C173	＊C2	C324	＊A3	IC305	A3	R4	＊D2	R128	＊C3	R235	B3	R342	＊A3	TP1	D5		
C8	D2	C174	C2	C325	B3	IC306	＊A5	R5	＊D2	R129	C2	R236	＊B3	R343	＊A3	TP2	D5		
C9	D1	C175	＊C3	C326	＊A4	IC307	A5	R6	＊D2	R130	＊C3	R237	＊B3	R344	＊A3	TP102	C5		
C10	D1	C176	＊C4	C327	＊A3	IC309	＊B6	R7	＊D1	R131	C2	R238	＊B3	R345	＊A4	TP202	B5		
C11	D1	C177	C4	C328	A3			R8	＊D1	R132	C2	R239	B3	R346	＊A3	TP302	A5		
C12	D3	C178	C4	C329	＊A5	L101	C2	R9	＊D2	R133	＊C3	R240	＊B3	R347	＊A4				
C13	D3	C179	C2	C330	＊A5	L102	C2	R10	＊D1	R134	＊C3	R241	＊B3	R348	＊A3	＊: B SIDE			
C14	D4	C180	C1	C331	＊A5	L201	B2	R11	＊D1	R135	C3	R242	＊B3	R349	＊A3				
C15	D4	C181	C2	C332	A3	L202	B2	R12	＊D1	R136	＊C3	R243	＊B3	R350	A4				
C17	＊D4	C19	＊D4	C333	＊A4	L301	A2	R13	＊D2	R137	＊C3	R244	＊B3	R354	＊A5				
C18	＊D4	C201	＊B2	C334	A3	L302	A2	R14	＊D2	R138	＊C3	R245	＊B4	R355	＊A4				
C33	B6	C202	＊B2	C335	＊A3			R15	＊D2	R139	C3	R246	＊B3	R356	A4				
C34	B6	C203	＊B2	C337	A5	Q1	D2	R16	＊D2	R140	＊C3	R247	＊B4	R357	＊A4				
C35	＊B6	C207	＊B2	C338	＊A5	Q2	＊D2	R17	＊D2	R141	＊C3	R248	＊B3	R358	A4				
C36	A6	C208	＊B2	C339	＊A3	Q3	＊D4	R18	＊D2	R142	＊C3	R249	＊B3	R359	A4				
C37	＊B6	C209	B2	C340	B4	Q6	B6	R19	＊D2	R143	＊C3	R250	＊B4	R360	A5				
C38	＊B6	C210	B2	C341	＊A4	Q7	C6	R21	D5	R144	＊C3	R254	＊B5	R361	A4				
C39	B6	C211	＊B2	C342	＊A4	Q9	C6	R22	＊D2	R145	＊C4	R255	＊B4	R362	＊A4				
C40	C6	C212	＊B2	C343	＊A5	Q101	＊C2	R23	＊D4	R146	＊C3	R256	B4	R363	A4				
C44	A5	C213	＊C2	C344	＊A4	Q102	C2	R24	D4	R147	＊C4	R257	B4	R364	＊A4				
C45	＊A5	C214	B2	C345	B4	Q103	＊C2	R25	D3	R148	＊C4	R258	B4	R365	＊A4				
C46	＊B6	C215	＊B2	C346	A5	Q104	＊C2	R26	D4	R149	＊C4	R259	B4	R366	＊A4				
C47	C6	C216	＊B2	C347	A5	Q105	＊C2	R27	＊C4	R150	＊C4	R260	B5	R367	＊A4				
C48	＊B6	C217	＊B2	C348	＊A5	Q106	C2	R28	D4	R154	＊C5	R261	＊B4	R368	＊A4				
C50	C6	C218	B2	C349	A5	Q107	C3	R29	＊D4	R155	＊C4	R262	B4	R369	＊A4				
C51	C6	C219	＊B2	C350	＊A5	Q108	C2	R30	＊D5	R156	C4	R263	B4	R370	A4				
C52	C6	C220	＊B3	C351	＊A5	Q109	＊C2	R32	＊D4	R157	＊C4	R264	＊B4	R371	＊A4				
C53	＊D3	C221	B3	C352	A5	Q110	＊C3	R33	＊D4	R158	C4	R265	＊B4	R372	＊A4				
C54	D5	C222	B3	C366	＊A2	Q111	C3	R34	＊D4	R159	C4	R266	＊B4	R373	A4				
C55	D4	C223	B3	C368	A4	Q112	C3	R35	＊D4	R160	C5	R267	＊B5	R374	A4				
C56	B6	C224	＊B3	C369	A4	Q113	＊C4	R36	＊D4	R161	＊C4	R268	＊B4	R375	＊B5				
C57	D5	C225	＊B3	C370	＊A3	Q114	C4	R37	D4	R162	C4	R269	＊B4	R376	＊A5				
C58	D4	C226	C3	C371	＊A4	Q115	C4	R38	D4	R163	C4	R270	B4	R377	＊A5				
C59	D4	C227	＊B3	C372	＊A3	Q116	C4	R40	＊D3	R164	＊C4	R271	B4	R378	＊A5				
C60	D4	C228	B3	C373	＊B2	Q117	C4	R41	D3	R165	＊C4	R272	＊B4	R379	＊A4				
C61	A6	C229	＊B5	C374	A2	Q118	C4	R42	D3	R166	＊C4	R273	B4	R380	＊A5				
C62	A6	C230	＊B5	C375	A2	Q119	＊C4	R43	D2	R167	＊C5	R274	B4	R381	＊A5				
C63	＊A6	C231	＊B5	C376	＊A4	Q120	C4	R58	＊B6	R168	＊C4	R275	＊C5	R382	＊A5				
C101	＊C1	C232	B3	C377	A4	Q121	C4	R59	＊B6	R169	＊C4	R276	＊B5	R383	＊A5				
C102	＊C1	C233	＊B4	C378	A5	Q122	C2	R60	A6	R170	C4	R277	＊B5	R391	＊A2				
C103	＊C2	C234	B3	C379	A2	Q123	C3	R61	A6	R171	C4	R278	＊B5	R392	A2				
C107	＊C2	C235	＊B3	C380	A2	Q124	C4	R62	A6	R172	＊C4	R279	＊B4	R394	＊A2				
C108	＊C2	C237	B5	C381	A2	Q201	＊B2	R63	B6	R173	C4	R280	＊B5	R395	＊A3				
C109	C2	C238	＊B5			Q202	C2	R68	＊A6	R174	C4	R281	＊B5	R396	＊A4				
C110	＊C2	C239	＊B3	CN1	＊C1	Q203	＊B2	R69	＊A6	R175	＊C5	R282	＊B5	R397	＊A5				
C111	＊C2	C240	C4	CN2	＊B1	Q204	＊B2	R70	＊A6	R176	＊C5	R283	＊B5	R398	A2				
C112	＊C2	C241	＊B4	CN3	＊A1	Q205	＊B2	R71	＊B6	R177	＊C5	R291	＊C2	R399	＊B2				
C113	＊C2	C242	＊B4	CN4	C5	Q206	C2	R72	＊D4	R178	＊C5	R292	B2	R400	C1				
C114	＊C2	C243	＊B5			Q207	＊B3	R73	＊B6	R179	＊C4	R294	＊B2	R401	C1				
C115	＊C2	C244	＊B4	D1	＊D2	Q208	B2	R75	＊B5	R180	＊C5	R295	＊B3	R402	C2				
C116	＊C2	C245	＊B4	D4	B6	Q209	＊B2	R76	＊A5	R181	＊C5	R296	＊B4	R403	C2				
C117	＊C3	C246	B5	D5	B6	Q210	＊B3	R77	＊C5	R182	＊C5	R297	＊B5	R404	C3				
C118	C2	C247	B5	D103	C3	Q211	B3	R78	＊B6	R183	＊C5	R298	B2	R405	＊C4				
C119	C3	C248	＊B5	D104	C4	Q212	＊B3	R79	＊C4	R191	＊C2	R299	＊C2	R406	＊C4				
C120	＊C3	C249	B5	D203	B3	Q213	＊B4	R81	D5	R192	C2	R301	＊A1	R407	C4				
C121	C3	C250	＊B5	D204	＊B4	Q214	B4	R82	D4	R194	＊C2	R302	＊A2	R500	B1				
C122	C3	C251	＊B5	D303	A3	Q215	B4	R83	＊B6	R195	＊C3	R303	＊A2	R501	B1				
C123	＊C3	C252	B5	D304	A4	Q216	B4	R84	＊B6	R196	＊C4	R304	＊A1	R502	B2				
C124	＊C3	C266	＊B2			Q217	B4	R85	＊B6	R197	＊C5	R305	＊A2	R503	B2				
C125	＊C3	C268	B4	E2	B5	Q218	B4	R86	＊B6	R198	C2	R306	A2	R504	C3				
C126	＊C3	C269	B4	E3	D2	Q219	＊B4	R87	＊B6	R199	＊C2	R307	A2	R505	＊B4				
C127	＊C3	C270	＊B3			Q220	B4	R88	＊B6	R201	＊B2	R309	A2	R506	＊B4				
C128	C3	C271	＊B4	FL101	C1	Q221	B4	R89	＊B6	R202	＊B2	R310	＊A2	R507	B4				
C129	＊C5	C272	＊B3	FL201	B1	Q222	B2	R90	＊B6	R203	＊B2	R311	＊A2	R600	A2				
C130	＊C5	C273	＊B2	FL301	A1	Q223	C3	R91	＊B6	R204	＊B2	R312	＊A2	R601	A2				
C131	＊C5	C274	B2			Q224	B4	R92	D5	R205	＊B2	R313	＊A3	R602	A2				
C132	C3	C275	B2	IC1	＊D2	Q301	＊A2	R93	D5	R206	C2	R314	＊A2	R603	A2				
C133	＊C4	C276	＊B4	IC2	＊D3	Q302	A2	R94	C1	R207	B2	R315	＊A3	R604	B3				
C134	＊C3	C277	B4	IC3	＊D4	Q303	＊A2	R101	＊C2	R209	B2	R316	＊A2	R605	＊A4				
C135	＊C4	C278	C4	IC4	D2	Q304	＊A2	R102	＊C2	R210	B2	R317	A2	R606	＊A4				
C137	C5	C279	B2	IC5	D2	Q305	＊A2	R103	＊C2	R211	＊B2	R318	＊A2	R607	A4				
C138	＊C5	C280	B1	IC7	D3	Q306	A2	R104	＊C2	R212	＊B2	R319	＊A2	R700	＊C3				
C139	＊C3	C281	B2	IC9	D4	Q307	＊A3	R105	＊C2	R213	＊B3	R320	＊A2	R701	C3				
C140	C4	C301	＊A2	IC10	D4	Q308	A2	R106	C1	R214	＊B2	R321	A2	R702	C3				
C141	＊C4	C302	＊A2	IC11	D4	Q309	＊A2	R107	C2	R215	＊B3	R322	＊A3	R703	C4				
C142	＊C4	C303	＊A2	IC12	D3	Q310	＊A3	R109	C2	R216	＊B2	R323	B3	R704	＊C4				
C143	＊C5	C307	＊A2	IC15	B6	Q311	A3	R110	＊C2	R217	＊B2	R325	＊A2	R707	＊C4				
C144	＊C4	C308	＊A2	IC16	＊B6	Q312	＊A3	R111	＊C2	R218	＊B2	R326	＊A2	R800	B2				
C145	＊C4	C309	A2	IC101	C2	Q313	＊A4	R112	＊C2	R219	＊B2	R327	＊A3	R801	B3				
C146	C5	C310	＊A2	IC102	C3	Q314	A4	R113	＊C2	R220	＊B2	R328	＊A3	R802	＊B3				
C147	＊D5	C311	＊A2	IC103	C3	Q315	A4	R114	＊C2	R221	B2	R329	＊A3	R803	B4				
C148	＊C5	C312	＊A2	IC105	C3	Q316	A4	R115	＊C3	R222	＊B3	R330	＊A3	R804	＊B4				
C149	C5	C313	＊A2	IC106	＊C5	Q317	A4	R116	＊C2	R223	B2	R331	＊A3	R807	＊B4				
C150	＊C5	C314	＊A2	IC107	C5	Q318	A4	R117	C2	R225	＊B2	R332	＊A3	R900	A2				
C151	＊C5	C315	＊A2	IC201	B2	Q319	＊A4	R118	＊C2	R226	＊B2	R333	A3	R901	A3				
C152	C5	C316	＊A2	IC202	B3	Q320	A4	R119	＊C2	R227	＊B3	R334	＊A3	R902	＊A3				
C16	D3	C317	＊A3	IC203	B3	Q321	A4	R120	＊C2	R228	＊B3	R335	A3	R903	A4				

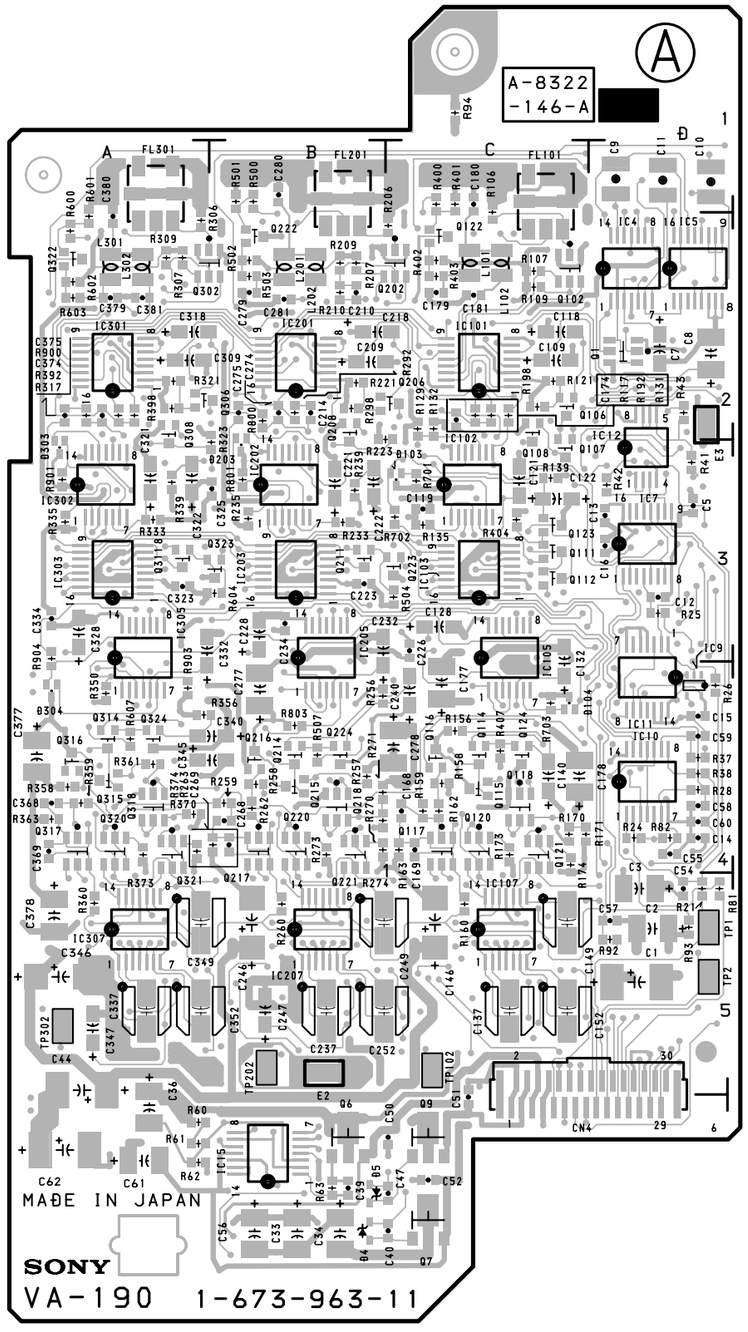

VA-190 -A SIDE-
SUFFIX: -11

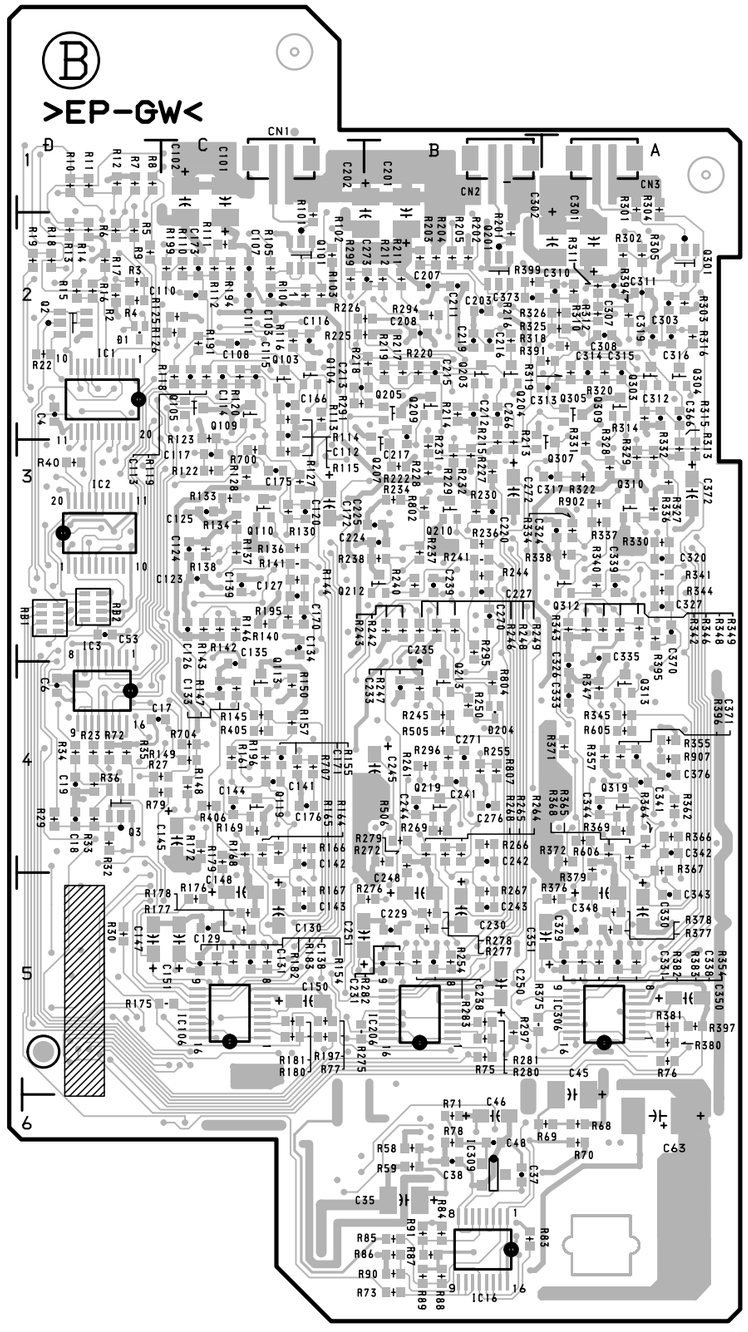

VA-190 -B SIDE-
SUFFIX: -11

DSR-570WS (J, UC)
DSR-570WSP (CE)
DSR-500WS (J, UC)
DSR-500WSP (CE) J, E
9-977-384-22

Sony Corporation
B&P Company

Printed in Japan
2002. 1 08
©1999